A220

Master

Aircraft recovery publication
ARP

BD500-3AB48-10400-00
Issue No. 097

Copyright © 2024 Airbus Canada Limited Partnership

All rights reserved. No part of this work may be reproduced or copied in any form or by any means without written permission of Airbus Canada Limited Partnership.

The Airbus and A220 logos are registered trademarks of Airbus Canada Limited Partnership.

The information, technical data and the designs disclosed herein are the exclusive property of Airbus Canada Limited Partnership or contain proprietary rights of others and are not to be used or disclosed to others without the written consent of Airbus Canada Limited Partnership. The recipient of this document, by its retention and use, agrees to hold in confidence the technical data and designs contained herein. The foregoing shall not apply to persons having proprietary rights to such information, technical data or such designs to the extent that such rights exist.

Publication No.: BD500-3AB48-10400-00

Manufacturer:

AIRBUS

Airbus Canada Limited Partnership
Customer Services
13100 Henri-Fabre Blvd., Mirabel, Quebec
Canada J7N 3C6

Applicable to: All

Intentionally left blank

Highlights

Issue 097

The listed changes are introduced in Issue 097-00, dated 2024-03-14, of this publication.

Data module code	Reason for change
BD500-A-J12-10-21-01AAA-730A-A	Changed Data Module To add a note.

Applicable to: All

Intentionally left blank

Technical Publications Comment form

AIRBUS A220

TO: **MCR FOCAL, TECHNICAL PUBLICATIONS AIRBUS CANADA LIMITED PARTNERSHIP 13100, BOULEVARD HENRI-FABRE MIRABEL, QUEBEC, CANADA, J7N 3C6 E-MAIL ADDRESS: A220_UCFocal@abc.airbus**	**Name of airline:**
	A220 reference #:
	Date: dd-mmm-yyyy

All fields marked with an asterisk* are required

Contact information

*Name:	*Corporation name:	*Dept name/Code:
Address:	City:	Province/State:
Postal code / Zip:	Country:	*Telephone:
Mobile/Cell phone:	Fax number:	*E-mail:

I would like to receive notification of actions on this request. NOTE: Responses will only be sent by electronic mail

Publication information

*Aircraft type:		*Aircraft model:	*Publication Module Code (PMC):
*Publication title/Issue:	*Media Type: ☐ Paper ☐ Web	*Data Module Code (DMC):	*DMC issue date:
Data module title:		Originator's reference number:	

*Comments:

Reason for change:

Reference data provided: ☐ Yes ☐ No Description:

Intentionally left blank

Change record

Make sure that the previous issues have been incorporated.

Incorporated issues must be recorded with the date of incorporation and a signature.

Issue	Incorporated date	by (signature)	Issue	Incorporated date	by (signature)
001	Feb 08/2016	Initial issue	026	Apr 28/2017	Signature on file
002	Apr 19/2016	Not released	027	May 18/2017	Signature on file
003	Apr 20/2016	Signature on file	028	May 25/2017	Signature on file
004	May 20/2016	Signature on file	029	Jun 01/2017	Signature on file
005	Jun 20/2016	Signature on file	030	Jun 15/2017	Signature on file
006	Jul 20/2016	Signature on file	031	Jul 06/2017	Signature on file
007	Aug 19/2016	Signature on file	032	Jul 13/2017	Signature on file
008	Sep 15/2016	Not released	033	Jul 20/2017	Signature on file
009	Sep 22/2016	Signature on file	034	Aug 17/2017	Signature on file
010	Oct 13/2016	Not released	035	Aug 31/2017	Signature on file
011	Nov 03/2016	Not released	036	Sep 14/2017	Signature on file
012	Nov 10/2016	Not released	037	Oct 05/2017	Signature on file
013	Nov 17/2016	Not released	038	Oct 12/2017	Signature on file
014	Nov 24/2016	Signature on file	039	Nov 02/2017	Signature on file
015	Dec 15/2016	Signature on file	040	Nov 30/2017	Signature on file
016	Jan 06/2017	Signature on file	041	Dec 07/2017	Signature on file
017	Jan 26/2017	Signature on file	042	Dec 14/2017	Signature on file
018	Feb 02/2017	Not released	043	Dec 21/2017	Signature on file
019	Feb 16/2017	Signature on file	044	Jan 04/2018	Signature on file
020	Mar 09/2017	Signature on file	045	Jan 11/2018	Signature on file
021	Mar 16/2017	Signature on file	046	Feb 01/2018	Signature on file
022	Mar 23/2017	Signature on file	047	Feb 08/2018	Signature on file
023	Apr 06/2017	Signature on file	048	Feb 15/2018	Signature on file
024	Apr 13/2017	Signature on file	048-01	Feb 22/2018	Signature on file
025	Apr 20/2017	Signature on file	049	Mar 15/2018	Signature on file

Applicable to: All

Change record

Make sure that the previous issues have been incorporated.

Incorporated issues must be recorded with the date of incorporation and a signature.

Issue	Incorporated date	by (signature)	Issue	Incorporated date	by (signature)
049-01	Mar 22/2018	Signature on file	059-01	Jun 27/2019	Signature on file
050	Apr 19/2018	Signature on file	059-02	Jul 11/2019	Signature on file
050-01	Apr 26/2018	Signature on file	060	Jul 18/2019	Signature on file
051	May 17/2018	Signature on file	060-01	Aug 01/2019	Signature on file
051-01	May 24/2018	Signature on file	061	Aug 15/2019	Signature on file
051-02	Jun 07/2018	Signature on file	061-01	Aug 29/2019	Signature on file
052	Jun 14/2018	Signature on file	062	Sep 19/2019	Signature on file
052-01	Aug 02/2018	Signature on file	062-01	Oct 03/2019	Signature on file
053	Aug 16/2018	Signature on file	062-02	Oct 10/2019	Signature on file
054	Oct 18/2018	Signature on file	063	Oct 17/2019	Signature on file
054-01	Nov 01/2018	Signature on file	063-01	Oct 31/2019	Signature on file
054-02	Nov 08/2018	Signature on file	064	Nov 14/2019	Signature on file
055	Nov 15/2018	Signature on file	064-01	Nov 21/2019	Signature on file
055-01	Nov 22/2018	Signature on file	064-02	Dec 05/2019	Signature on File
056	Dec 20/2018	Signature on file	064-03	Dec 12/2019	Signature on File
056-01	Apr 04/2019	Signature on file	065	Dec 19/2019	Signature on file
057	Apr 18/2019	Signature on file	065-01	Jan 09/2020	Signature on file
057-01	May 02/2019	Signature on file	066	Jan 16/2020	Signature on file
057-02	May 09/2019	Signature on file	066-01	Jan 23/2020	Signature on file
058	May 16/2019	Signature on file	066-02	Jan 30/2020	Signature on file
058-01	May 23/2019	Signature on file	066-03	Feb 13/2020	Signature on file
058-02	May 30/2019	Signature on file	067	Feb 20/2020	Signature on file
058-03	Jun 06/2019	Signature on file	068	Mar 19/2020	Signature on file
058-04	Jun 13/2019	Signature on file	069	Apr 16/2020	Signature on file
059	Jun 20/2019	Signature on file	069-01	Jun 04/2020	Signature on file

Applicable to: All

Change record

Make sure that the previous issues have been incorporated.

Incorporated issues must be recorded with the date of incorporation and a signature.

Issue	Incorporated date	by (signature)	Issue	Incorporated date	by (signature)
070	Jun 18/2020	Signature on file	081-01	Oct 07/2021	Signature on file
070-01	Jun 25/2020	Signature on file	082	Oct 14/2021	Signature on file
071	Jul 16/2020	Signature on file	082-01	Jan 27/2022	Signature on file
071-01	Jul 23/2020	Signature on file	82-02	Feb 03/2022	Signature on file
071-02	Aug 13/2020	Signature on file	083	Feb 17/2022	Signature on file
072	Aug 20/2020	Signature on file	83-01	May 12/2022	Signature on file
072-01	Aug 27/2020	Signature on file	084	May 19/2022	Signature on file
073	Sep 17/2020	Signature on file	084-01	Jun 02/2022	Signature on file
073-01	Oct 01/2020	Signature on file	085	Jun 16/2022	Signature on file
074	Oct 15/2020	Signature on file	086	Jul 14/2022	Signature on file
074-01	Oct 22/2020	Signature on file	086-01	Jul 21/2022	Signture on file
074-02	Nov 05/2020	Signature on file	087	Aug 18/2022	Signature on file
075	Nov 19/2020	Signature on file	088	Oct 20/2022	Signature on file
075-01	Dec 10/2020	Signature on file	088-01	Oct 27/2022	Signature on file
076-00	Jan 14/2021	Signature on file	088-02	Nov 10/2022	Signature on file
076-01	Mar 11/2021	Signature on file	089-00	Nov 17/2022	Signature on file
077-00	Mar 18/2021	Signature on file	089-01	Dec 08/2002	Signature on file
077-01	Mar 25/2021	Signature on file	090-00	Dec 15/2022	Signature on file
078	Apr 15/2021	Signature on file	090-01	Feb 02/2023	Signature on file
078-01	May 06/2021	Signature on file	091-00	Feb 16/2023	Signature on file
079	May 20/2021	Signature on file	091-01	Mar 09/2023	Signature on file
079-01	Jul 08/2021	Signature on file	092-00	Mar 16/2023	Signature on file
080	Jul 15/2021	Signature on file	92-01	Mar 23/2023	Signature on file
080-01	Aug 05/2021	Signature on file	93-00	Apr 20/2023	Signature on file
081	Aug 19/2021	Signature on file	093-01	May 11/2023	Signature on file

Applicable to: All

Change record

Make sure that the previous issues have been incorporated.

Incorporated issues must be recorded with the date of incorporation and a signature.

Issue	Incorporated date	by (signature)	Issue	Incorporated date	by (signature)
094-00	May 18/2023	Signature on file	000		
94- 01	Sep 21/2023	Signature on file	000		
95- 00	Oct 19/2023	Signature on file	000		
96- 00	Dec 14/2023	Signature on file	000		
097-00	Mar 14/2024		000		
000			000		
000			000		
000			000		
000			000		
000			000		
000			000		
000			000		
000			000		
000			000		
000			000		
000			000		
000			000		
000			000		
000			000		
000			000		
000			000		
000			000		
000			000		
000			000		
000			000		
000			000		

Applicable to: All

List of effective data modules

The listed documents are included in Issue 097-00, dated 2024-03-14, of this publication.

C = Changed data module
N = New data module

Document title	Data module code	Issue date	No. of pages	Applicable to
Aircraft Recovery Publication - Introduction	BD500-A-J00-00-00-11AAA-018A-A	2023-01-25	9	50001-54999, 55001-59999
Aircraft Recovery Publication (ARP) process - Technical data	BD500-A-J00-00-00-24AAA-030A-A	2022-10-17	16	50001-54999, 55001-59999
Health and safety issues - General warnings and cautions and related safety data	BD500-A-J07-40-00-00AAA-012A-A	2019-10-22	4	50001-54999, 55001-59999
Prepare a roadway - Preparation for vehicle transportation	BD500-A-J07-50-00-00AAA-811A-A	2019-08-19	8	50001-54999, 55001-59999
Weight and center of gravity management - General	BD500-A-J07-40-00-01AAA-028A-A	2019-07-05	3	50001-54999, 55001-59999
Fuel data for ARP A220-100 - Technical data	BD500-A-J07-40-00-05AAA-030A-A	2019-10-22	5	50001-54999
Fuel data for ARP A220-300 - Technical data	BD500-A-J07-40-00-06AAA-030A-A	2019-10-22	5	55001-59999
Managing aircraft weight - Diagram and lists	BD500-A-J08-40-00-00AAA-050A-A	2020-10-13	3	50001-54999, 55001-59999
Design weight limits A220-100 - Technical data	BD500-A-J08-41-02-00AAA-030A-A	2019-10-22	5	50001-54999
Design weight limits A220-300 - Technical data	BD500-A-J08-41-02-01AAA-030A-A	2020-06-17	5	55001-59999
Center of gravity limits A220-100 - Technical data	BD500-A-J08-41-03-00AAA-030A-A	2019-10-23	7	50001-54999
Center of gravity limits A220-300 - Technical data	BD500-A-J08-41-03-01AAA-030A-A	2020-06-18	7	55001-59999
Cargo compartment CS100 - Technical data	BD500-A-J08-43-05-00AAA-030A-A	2020-01-23	10	50001-54999

Applicable to: All

Document title	Data module code	Issue date	No. of pages	Applicable to
Cargo Compartment A220-300 - Technical data	BD500-A-J08-43-05-01AAA-030A-A	2019-10-24	10	55001-59999
Cargo loading A220-100 - Technical data	BD500-A-J08-43-07-00AAA-030A-A	2019-10-24	2	50001-54999
Cargo loading A220-300 - Technical data	BD500-A-J08-43-07-01AAA-030A-A	2019-10-24	2	55001-59999
Balance limits A220-100 - Technical data	BD500-A-J08-50-01-00AAA-030A-A	2020-07-14	4	50001-54999
Balance limits A200-300 - Technical data	BD500-A-J08-50-01-01AAA-030A-A	2020-07-14	4	55001-59999
Fuel system - Defueling - General	BD500-A-J12-10-28-00AAA-028A-A	2018-10-24	10	50001-54999, 55001-59999
Pressure - Defuel and drain fuel	BD500-A-J12-10-28-02AAA-221A-A	2021-03-01	12	50001-54999, 55001-59999
Suction (no electrical power) - Defuel and drain fuel	BD500-A-J12-10-28-03AAA-221A-A	2019-08-21	3	50001-54999, 55001-59999
Use of jacks - Standard support equipment and tools	BD500-A-J07-10-00-00AAA-062A-A	2016-11-02	1	50001-54999, 55001-59999
Use of pneumatic lifting bags - Standard support equipment and tools	BD500-A-J07-12-00-00AAA-062A-A	2022-05-26	5	50001-54999, 55001-59999
Aircraft with nose landing gear retracted, collapsed, or missing - Lifting	BD500-A-J07-12-00-01AAA-171A-A	2019-09-23	6	50001-54999, 55001-59999
Aircraft with nose landing gear retracted, collapsed, or missing with one or both engines missing - Lifting	BD500-A-J07-12-00-02AAA-171A-A	2019-09-23	6	50001-54999, 55001-59999
Aircraft with nose landing gear and one main landing gear collapsed, missing or retracted - Lifting	BD500-A-J07-12-00-03AAA-171A-A	2019-09-23	7	50001-54999, 55001-59999
Aircraft with nose landing gear and one main landing gear collapsed, missing, or retracted and one or both engines missing - Lifting	BD500-A-J07-12-00-04AAA-171A-A	2019-09-23	7	50001-54999, 55001-59999
Aircraft with one main landing gear collapsed,	BD500-A-J07-12-00-05AAA-171A-A	2019-09-23	6	50001-54999, 55001-59999

Document title	Data module code	Issue date	No. of pages	Applicable to
missing, or retracted - Lifting				
Aircraft with one main landing gear collapsed, missing, or retracted and one or both engines missing - Lifting	BD500-A-J07-12-00-06AAA-171A-A	2019-09-23	6	50001-54999, 55001-59999
Aircraft with all landing gears collapsed, missing, or retracted - Lifting	BD500-A-J07-12-00-07AAA-171A-A	2019-09-23	6	50001-54999, 55001-59999
Aircraft with all landing gears collapsed, missing, or retracted and one or both engines missing - Lifting	BD500-A-J07-12-00-08AAA-171A-A	2019-09-23	6	50001-54999, 55001-59999
Aircraft with both main landing gears collapsed, missing, or retracted - Lifting	BD500-A-J07-12-00-09AAA-171A-A	2019-09-23	6	50001-54999, 55001-59999
Aircraft with both main landing gears collapsed, missing, or retracted and one or both engines missing - Lifting	BD500-A-J07-12-00-10AAA-171A-A	2019-09-23	6	50001-54999, 55001-59999
Tail tip incident - Lifting	BD500-A-J07-12-00-11AAA-171A-A	2019-09-23	6	50001-54999, 55001-59999
Leveling and lifting - General	BD500-A-J07-40-00-02AAA-028A-A	2018-01-24	4	50001-54999, 55001-59999
Jacking loads for ARP (A220-100) - Technical data	BD500-A-J07-40-00-07AAA-030A-A	2019-10-22	6	50001-54999
Jacking loads for ARP (A220-300) - Technical data	BD500-A-J07-40-00-08AAA-030A-A	2019-10-22	6	55001-59999
Towing with deflated tires - Debogging	BD500-A-J09-13-00-03AAA-179A-A	2020-03-09	3	50001-54999, 55001-59999
Towing safety precautions - General maintenance safety procedure	BD500-A-J09-11-00-01AAA-913G-A	2021-07-01	10	50001-54999, 55001-59999
Debogging - General	BD500-A-J09-13-00-00AAA-028A-A	2019-12-04	2	50001-54999, 55001-59999
Towing from the main gear - Debogging	BD500-A-J09-13-00-02AAA-179A-A	2017-08-24	8	50001-54999, 55001-59999
Moving damaged aircraft on trailers - Handling	BD500-A-J09-20-00-01AAA-170A-A	2017-08-24	7	50001-54999, 55001-59999

Applicable to: All

Document title	Data module code		Issue date	No. of pages	Applicable to
Moving damaged aircraft with cranes - Handling	BD500-A-J09-20-00-02AAA-170A-A		2017-05-11	4	50001-54999, 55001-59999
Moving aircraft with specialized recovery transport vehicles - Handling	BD500-A-J09-20-00-03AAA-170A-A		2019-10-09	12	50001-54999, 55001-59999
Ground maneuvering, turning radii - Technical data	BD500-A-J09-20-01-00AAA-030A-A		2018-02-05	4	50001-54999, 55001-59999
Conversion tables - General	BD500-A-J00-40-03-00AAA-028A-A		2016-01-12	3	50001-54999, 55001-59999
Aircraft dimensions A220-100 - Technical data	BD500-A-J06-10-00-02AAA-030A-A		2019-10-22	8	50001-54999
Aircraft dimensions A220-300 - Technical data	BD500-A-J06-10-00-03AAA-030A-A		2019-10-22	8	55001-59999
Ground clearances - Technical data	BD500-A-J06-11-00-01AAA-030A-A		2023-11-27	5	50001-54999, 55001-59999
Door clearances and clear opening dimensions - Technical data	BD500-A-J06-11-00-02AAA-030A-A		2021-09-29	23	50001-54999, 55001-59999
Reference lines - Technical data	BD500-A-J06-20-00-00AAA-030A-A		2019-11-12	2	50001-54999, 55001-59999
Frame stations and fuselage stations - Technical data	BD500-A-J06-20-01-00AAA-030A-A		2022-10-28	19	50001-54999, 55001-59999
Empennage stations - Technical data	BD500-A-J06-20-02-00AAA-030A-A		2022-10-28	10	50001-54999, 55001-59999
Engine/nacelle and pylon stations - Technical data	BD500-A-J06-20-03-00AAA-030A-A		2022-01-18	3	50001-54999, 55001-59999
Wing stations - Technical data	BD500-A-J06-20-04-00AAA-030A-A		2023-09-14	6	50001-54999, 55001-59999
Major zones - Technical data	BD500-A-J06-30-01-00AAA-030A-A		2017-03-08	2	50001-54999, 55001-59999
External air conditioning source - Disconnect procedure	BD500-A-J12-10-21-01AAA-510A-A		2023-02-08	6	50001-54999, 55001-59999
External air conditioning source - Connect procedure	BD500-A-J12-10-21-01AAA-730A-A	C	2024-03-05	8	50001-54999, 55001-59999
Hydraulic systems No. 1 or No. 2 - Drain Hydraulic	BD500-A-J12-10-29-01AAA-228A-A		2019-06-17	9	50001-54999, 55001-59999

Applicable to: All

Document title	Data module code	Issue date	No. of pages	Applicable to
Hydraulic systems No. 1 or No. 2 - Bleed	BD500-A-J12-10-29-01AAA-231A-A	2023-05-03	14	50001-54999, 55001-59999
Hydraulic systems No. 1 or No. 2 - Depressurize hydraulics	BD500-A-J12-10-29-01AAA-562A-A	2023-03-02	9	50001-54999, 55001-59999
Hydraulic system No. 3 - Drain Hydraulic	BD500-A-J12-10-29-02AAA-228A-A	2019-06-17	9	50001-54999, 55001-59999
Hydraulic system No. 3 - Bleed	BD500-A-J12-10-29-02AAA-231A-A	2023-05-03	11	50001-54999, 55001-59999
Hydraulic system No. 3 - Depressurize hydraulics	BD500-A-J12-10-29-02AAA-562A-A	2023-03-02	9	50001-54999, 55001-59999
Hydraulic system No. 3 accumulator - Release nitrogen pressure	BD500-A-J12-10-29-03AAA-224A-A	2017-12-07	5	50001-54999, 55001-59999
Potable water system - Drain water	BD500-A-J12-10-38-01AAA-226A-A	2023-10-11	6	50001-54999, 55001-59999
Potable water system - Clean with chemical agent	BD500-A-J12-10-38-01AAA-251A-A	2019-12-13	9	50001-54999, 55001-59999
Water Waste System (WWS) - Drain other liquid	BD500-A-J12-10-38-02AAA-228A-A	2022-07-04	6	50001-54999, 55001-59999
Deicing/Anti-icing - Remove ice	BD500-A-J12-31-00-00AAA-261A-A	2023-03-10	43	50001-54999, 55001-59999
Aircraft grounding - General maintenance procedure	BD500-A-J24-00-00-00AAA-913A-A	2022-05-26	5	50001-54999, 55001-59999
Landing Gear System (LGS) - Description of how it is made and its function	BD500-A-J32-00-00-00AAA-040A-A	2022-05-04	7	50001-54999, 55001-59999
Composite repairs - General maintenance procedure	BD500-A-J51-73-00-00AAA-913A-A	2016-04-08	5	50001-54999, 55001-59999
Stabilizing the aircraft - Stabilizing	BD500-A-J07-20-00-00AAA-177A-A	2022-07-13	7	50001-54999, 55001-59999
Tethering and shoring - General data - Tethering and shoring	BD500-A-J07-20-00-00AAA-178A-A	2019-10-22	3	50001-54999, 55001-59999
Use of cranes - Standard support equipment and tools	BD500-A-J07-30-00-00AAA-062A-A	2017-06-28	2	50001-54999, 55001-59999
Site survey - General	BD500-A-J07-40-00-00AAA-028A-A	2016-08-10	3	50001-54999, 55001-59999

Applicable to: All

Document title	Data module code	Issue date	No. of pages	Applicable to
General and quick reference checklist for aircraft recovery - General	BD500-A-J07-40-00-04AAA-028A-A	2016-09-12	2	50001-54999, 55001-59999
Aircraft runway/taxiway excursion - Landing gear compression - Handling procedure	BD500-A-J09-13-00-04AAA-912A-A	2018-11-01	10	50001-54999, 55001-59999

Table of contents

The listed documents are included in Issue 097-00, dated 2024-03-14, of this publication.

Document title	Data module code	Issue date	Applicable to
Introduction			
Aircraft Recovery Publication - Introduction	BD500-A-J00-00-00-11AAA-018A-A	2023-01-25	50001-54999, 55001-59999
Aircraft Recovery Publication (ARP) process - Technical data	BD500-A-J00-00-00-24AAA-030A-A	2022-10-17	50001-54999, 55001-59999
Site survey			
Health and safety issues - General warnings and cautions and related safety data	BD500-A-J07-40-00-00AAA-012A-A	2019-10-22	50001-54999, 55001-59999
Prepare a roadway - Preparation for vehicle transportation	BD500-A-J07-50-00-00AAA-811A-A	2019-08-19	50001-54999, 55001-59999
Weight and centre of gravity management			
Weight and center of gravity management - General	BD500-A-J07-40-00-01AAA-028A-A	2019-07-05	50001-54999, 55001-59999
Fuel data for ARP A220-100 - Technical data	BD500-A-J07-40-00-05AAA-030A-A	2019-10-22	50001-54999
Fuel data for ARP A220-300 - Technical data	BD500-A-J07-40-00-06AAA-030A-A	2019-10-22	55001-59999
Managing aircraft weight - Diagram and lists	BD500-A-J08-40-00-00AAA-050A-A	2020-10-13	50001-54999, 55001-59999
Design weight limits A220-100 - Technical data	BD500-A-J08-41-02-00AAA-030A-A	2019-10-22	50001-54999
Design weight limits A220-300 - Technical data	BD500-A-J08-41-02-01AAA-030A-A	2020-06-17	55001-59999
Center of gravity limits A220-100 - Technical data	BD500-A-J08-41-03-00AAA-030A-A	2019-10-23	50001-54999
Center of gravity limits A220-300 - Technical data	BD500-A-J08-41-03-01AAA-030A-A	2020-06-18	55001-59999
Cargo compartment CS100 - Technical data	BD500-A-J08-43-05-00AAA-030A-A	2020-01-23	50001-54999
Cargo Compartment A220-300 - Technical data	BD500-A-J08-43-05-01AAA-030A-A	2019-10-24	55001-59999
Cargo loading A220-100 - Technical data	BD500-A-J08-43-07-00AAA-030A-A	2019-10-24	50001-54999
Cargo loading A220-300 - Technical data	BD500-A-J08-43-07-01AAA-030A-A	2019-10-24	55001-59999
Balance limits A220-100 - Technical data	BD500-A-J08-50-01-00AAA-030A-A	2020-07-14	50001-54999

Applicable to: All

Document title	Data module code	Issue date	Applicable to
Balance limits A200-300 - Technical data	BD500-A-J08-50-01-01AAA-030A-A	2020-07-14	55001-59999
Fuel system - Defueling - General	BD500-A-J12-10-28-00AAA-028A-A	2018-10-24	50001-54999, 55001-59999
Pressure - Defuel and drain fuel	BD500-A-J12-10-28-02AAA-221A-A	2021-03-01	50001-54999, 55001-59999
Suction (no electrical power) - Defuel and drain fuel	BD500-A-J12-10-28-03AAA-221A-A	2019-08-21	50001-54999, 55001-59999
Leveling and lifting			
Use of jacks - Standard support equipment and tools	BD500-A-J07-10-00-00AAA-062A-A	2016-11-02	50001-54999, 55001-59999
Use of pneumatic lifting bags - Standard support equipment and tools	BD500-A-J07-12-00-00AAA-062A-A	2022-05-26	50001-54999, 55001-59999
Aircraft with nose landing gear retracted, collapsed, or missing - Lifting	BD500-A-J07-12-00-01AAA-171A-A	2019-09-23	50001-54999, 55001-59999
Aircraft with nose landing gear retracted, collapsed, or missing with one or both engines missing - Lifting	BD500-A-J07-12-00-02AAA-171A-A	2019-09-23	50001-54999, 55001-59999
Aircraft with nose landing gear and one main landing gear collapsed, missing or retracted - Lifting	BD500-A-J07-12-00-03AAA-171A-A	2019-09-23	50001-54999, 55001-59999
Aircraft with nose landing gear and one main landing gear collapsed, missing, or retracted and one or both engines missing - Lifting	BD500-A-J07-12-00-04AAA-171A-A	2019-09-23	50001-54999, 55001-59999
Aircraft with one main landing gear collapsed, missing, or retracted - Lifting	BD500-A-J07-12-00-05AAA-171A-A	2019-09-23	50001-54999, 55001-59999
Aircraft with one main landing gear collapsed, missing, or retracted and one or both engines missing - Lifting	BD500-A-J07-12-00-06AAA-171A-A	2019-09-23	50001-54999, 55001-59999
Aircraft with all landing gears collapsed, missing, or retracted - Lifting	BD500-A-J07-12-00-07AAA-171A-A	2019-09-23	50001-54999, 55001-59999
Aircraft with all landing gears collapsed, missing, or retracted and one or both engines missing - Lifting	BD500-A-J07-12-00-08AAA-171A-A	2019-09-23	50001-54999, 55001-59999
Aircraft with both main landing gears collapsed, missing, or retracted - Lifting	BD500-A-J07-12-00-09AAA-171A-A	2019-09-23	50001-54999, 55001-59999
Aircraft with both main landing gears collapsed, missing, or retracted and one or both engines missing - Lifting	BD500-A-J07-12-00-10AAA-171A-A	2019-09-23	50001-54999, 55001-59999
Tail tip incident - Lifting	BD500-A-J07-12-00-11AAA-171A-A	2019-09-23	50001-54999, 55001-59999

Applicable to: All

Document title	Data module code	Issue date	Applicable to
Leveling and lifting - General	BD500-A-J07-40-00-02AAA-028A-A	2018-01-24	50001-54999, 55001-59999
Jacking loads for ARP (A220-100) - Technical data	BD500-A-J07-40-00-07AAA-030A-A	2019-10-22	50001-54999
Jacking loads for ARP (A220-300) - Technical data	BD500-A-J07-40-00-08AAA-030A-A	2019-10-22	55001-59999
Towing with deflated tires - Debogging	BD500-A-J09-13-00-03AAA-179A-A	2020-03-09	50001-54999, 55001-59999
Moving the aircraft			
Towing safety precautions - General maintenance safety procedure	BD500-A-J09-11-00-01AAA-913G-A	2021-07-01	50001-54999, 55001-59999
Debogging - General	BD500-A-J09-13-00-00AAA-028A-A	2019-12-04	50001-54999, 55001-59999
Towing from the main gear - Debogging	BD500-A-J09-13-00-02AAA-179A-A	2017-08-24	50001-54999, 55001-59999
Moving damaged aircraft on trailers - Handling	BD500-A-J09-20-00-01AAA-170A-A	2017-08-24	50001-54999, 55001-59999
Moving damaged aircraft with cranes - Handling	BD500-A-J09-20-00-02AAA-170A-A	2017-05-11	50001-54999, 55001-59999
Moving aircraft with specialized recovery transport vehicles - Handling	BD500-A-J09-20-00-03AAA-170A-A	2019-10-09	50001-54999, 55001-59999
Ground maneuvering, turning radii - Technical data	BD500-A-J09-20-01-00AAA-030A-A	2018-02-05	50001-54999, 55001-59999
Reference data for aircraft recovery			
Conversion tables - General	BD500-A-J00-40-03-00AAA-028A-A	2016-01-12	50001-54999, 55001-59999
Aircraft dimensions A220-100 - Technical data	BD500-A-J06-10-00-02AAA-030A-A	2019-10-22	50001-54999
Aircraft dimensions A220-300 - Technical data	BD500-A-J06-10-00-03AAA-030A-A	2019-10-22	55001-59999
Ground clearances - Technical data	BD500-A-J06-11-00-01AAA-030A-A	2023-11-27	50001-54999, 55001-59999
Door clearances and clear opening dimensions - Technical data	BD500-A-J06-11-00-02AAA-030A-A	2021-09-29	50001-54999, 55001-59999
Reference lines - Technical data	BD500-A-J06-20-00-00AAA-030A-A	2019-11-12	50001-54999, 55001-59999
Frame stations and fuselage stations - Technical data	BD500-A-J06-20-01-00AAA-030A-A	2022-10-28	50001-54999, 55001-59999
Empennage stations - Technical data	BD500-A-J06-20-02-00AAA-030A-A	2022-10-28	50001-54999, 55001-59999

Document title	Data module code	Issue date	Applicable to
Engine/nacelle and pylon stations - Technical data	BD500-A-J06-20-03-00AAA-030A-A	2022-01-18	50001-54999, 55001-59999
Wing stations - Technical data	BD500-A-J06-20-04-00AAA-030A-A	2023-09-14	50001-54999, 55001-59999
Major zones - Technical data	BD500-A-J06-30-01-00AAA-030A-A	2017-03-08	50001-54999, 55001-59999
External air conditioning source - Disconnect procedure	BD500-A-J12-10-21-01AAA-510A-A	2023-02-08	50001-54999, 55001-59999
External air conditioning source - Connect procedure	BD500-A-J12-10-21-01AAA-730A-A	2024-03-05	50001-54999, 55001-59999
Hydraulic systems No. 1 or No. 2 - Drain Hydraulic	BD500-A-J12-10-29-01AAA-228A-A	2019-06-17	50001-54999, 55001-59999
Hydraulic systems No. 1 or No. 2 - Bleed	BD500-A-J12-10-29-01AAA-231A-A	2023-05-03	50001-54999, 55001-59999
Hydraulic systems No. 1 or No. 2 - Depressurize hydraulics	BD500-A-J12-10-29-01AAA-562A-A	2023-03-02	50001-54999, 55001-59999
Hydraulic system No. 3 - Drain Hydraulic	BD500-A-J12-10-29-02AAA-228A-A	2019-06-17	50001-54999, 55001-59999
Hydraulic system No. 3 - Bleed	BD500-A-J12-10-29-02AAA-231A-A	2023-05-03	50001-54999, 55001-59999
Hydraulic system No. 3 - Depressurize hydraulics	BD500-A-J12-10-29-02AAA-562A-A	2023-03-02	50001-54999, 55001-59999
Hydraulic system No. 3 accumulator - Release nitrogen pressure	BD500-A-J12-10-29-03AAA-224A-A	2017-12-07	50001-54999, 55001-59999
Potable water system - Drain water	BD500-A-J12-10-38-01AAA-226A-A	2023-10-11	50001-54999, 55001-59999
Potable water system - Clean with chemical agent	BD500-A-J12-10-38-01AAA-251A-A	2019-12-13	50001-54999, 55001-59999
Water Waste System (WWS) - Drain other liquid	BD500-A-J12-10-38-02AAA-228A-A	2022-07-04	50001-54999, 55001-59999
Deicing/Anti-icing - Remove ice	BD500-A-J12-31-00-00AAA-261A-A	2023-03-10	50001-54999, 55001-59999
Aircraft grounding - General maintenance procedure	BD500-A-J24-00-00-00AAA-913A-A	2022-05-26	50001-54999, 55001-59999
Landing Gear System (LGS) - Description of how it is made and its function	BD500-A-J32-00-00-00AAA-040A-A	2022-05-04	50001-54999, 55001-59999
Composite repairs - General maintenance procedure	BD500-A-J51-73-00-00AAA-913A-A	2016-04-08	50001-54999, 55001-59999
Tethering and shoring			

Applicable to: All

Document title	Data module code	Issue date	Applicable to
Stabilizing the aircraft - Stabilizing	BD500-A-J07-20-00-00AAA-177A-A	2022-07-13	50001-54999, 55001-59999
Tethering and shoring - General data - Tethering and shoring	BD500-A-J07-20-00-00AAA-178A-A	2019-10-22	50001-54999, 55001-59999
Use of cranes - Standard support equipment and tools	BD500-A-J07-30-00-00AAA-062A-A	2017-06-28	50001-54999, 55001-59999
Site survey - General	BD500-A-J07-40-00-00AAA-028A-A	2016-08-10	50001-54999, 55001-59999
General and quick reference checklist for aircraft recovery - General	BD500-A-J07-40-00-04AAA-028A-A	2016-09-12	50001-54999, 55001-59999
Aircraft runway/taxiway excursion - Landing gear compression - Handling procedure	BD500-A-J09-13-00-04AAA-912A-A	2018-11-01	50001-54999, 55001-59999

Intentionally left blank

Introduction

Intentionally left blank

Aircraft Recovery Publication - Introduction

Applicability: 50001-54999, 55001-59999

Table of contents

Page

Aircraft Recovery Publication - Introduction..... 1
References..... 1
Description..... 2
1 Introduction..... 2
1.1 How to use this publication..... 2
1.1.1 Publication front matter..... 2
1.1.2 Aircraft applicability..... 4
1.1.3 Standard Numbering System (SNS)..... 4
1.2 Contents..... 6
1.2.1 Reference information..... 6
1.2.2 Common information..... 6
1.2.3 Preliminary requirements..... 6
1.2.4 Required conditions..... 7
1.2.5 Support equipment..... 7
1.2.6 Consumables..... 7
1.2.7 Spares..... 8
1.2.8 Safety conditions..... 9
1.2.9 Required conditions..... 9
1.2.10 Definition of Warnings, Cautions, and Notes..... 9
1.2.11 Acronyms..... 9
1.3 Correspondence..... 9

List of tables

Page

1 References..... 1
2 References..... 6
3 Consumables references..... 8
4 Spares..... 8

List of figures

Page

1 Highlights and Table of Contents page..... 3
2 Data Module (DM) definition..... 5

References

Table 1 References

Data Module/Technical Publication	Title
BD500-A-J06-20-01-00AAA-030A-A	Frame stations and fuselage stations - Technical data

Description

1 Introduction

1.1 How to use this publication

1.1.1 Publication front matter

1.1.1.1 Title page

The title page contains the A220 identification and the issue number of the publication.

1.1.1.2 Highlights

The highlights (change record) is located after the introduction when you first open the publication.

Refer to Fig. 1 .

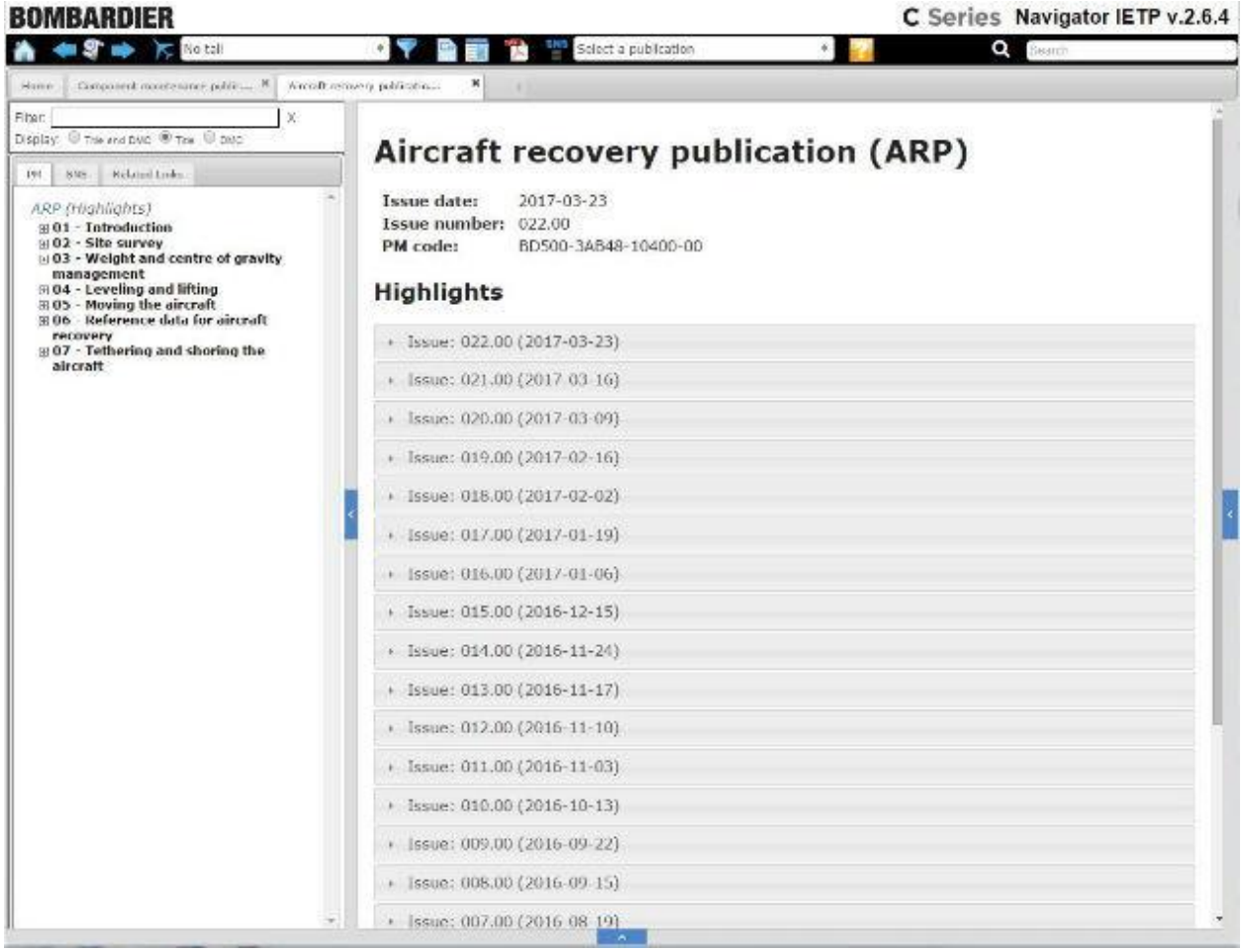

ICN-BD500-A-J000000-A-3AB48-42332-A-001-01

Figure 1 Highlights and Table of Contents page

1.1.1.3 Table of contents

There are two ways to view the table of contents. In Navigator Interactive Electronic Technical Publication (IETP), select Standard Numbering System (SNS) and title, info name and title, and/or SNS. Selecting the plus (+) will collapse/expand the table of contents node.

1.1.2 Aircraft applicability

Navigator IETP applicability filter applies to all aircraft, 50001 to 54999, 55001 to 59999.

In Navigator IETP, select a tail number from the drop down menu on the tool bar. Once selected, only the information for that tail number will be shown.

1.1.3 Standard Numbering System (SNS)

The Data Module Code (DMC) SNS is specified by the S1000D standard for the system, subsystem and sub-subsystem numbers.

1.1.3.1 Data Module Code (DMC)

The model identification code is based on the Information Control Number (ICN), is comprised of 10 parts, including the prefix ICN. The code is defined as follows. Refer to Fig. 2 .

- The model identification code is used to indicate the model/overall system to which the technical data is applicable. The model identification code for A220 is BD500.
- The system difference code indicates a system difference between configurations.
- The SNS describes the aircraft system and subsystem breakdown to which the information in the data module applies.
    - The system field contains a two digit number that identifies the system that a data module is contained within.
    - The subsystem field identifies the further breakdown of the system.
    - The sub-subsystem field identifies the further breakdown of a subsystem.
    - The unit/assembly code refines the SNS beyond the system/subsystem/sub-subsystem level.
- The disassembly code identifies the breakdown condition of the assembly to which information applies.
- The disassembly code variant designates alternative items of equipment or components that differ slightly in design, but not enough to warrant a change of the system difference code.
- The information code is used to describe the type of information contained in the data module.
- The information code variant indicates any variation in the activity defined by the information code.
- The item location code indicates where the maintenance task will be done in terms of a product or where the information is applicable.

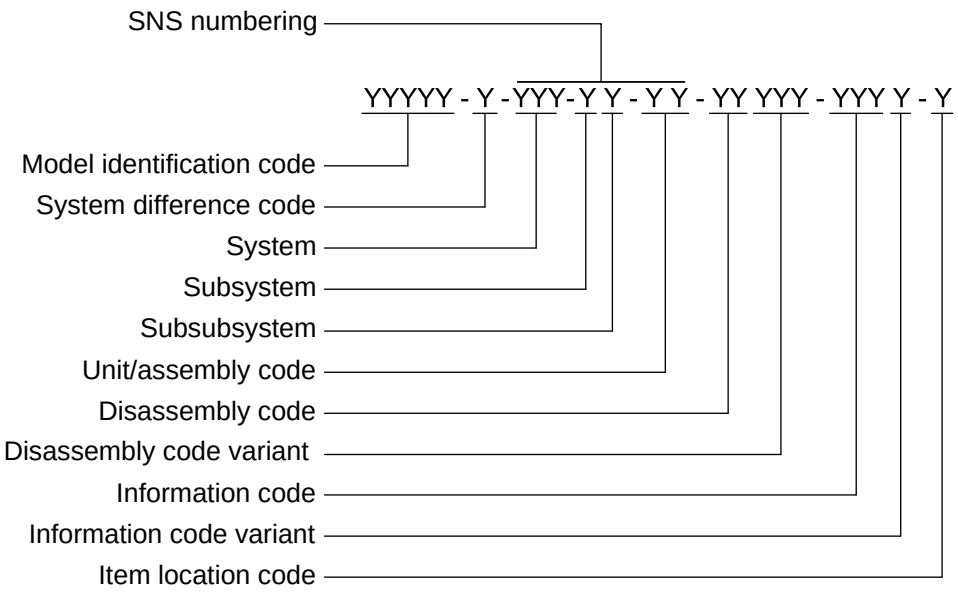

ICN-BD500-A-J000000-A-3AB48-37943-A-001-01

Figure 2 Data Module (DM) definition

1.1.3.2 List of sections

The Aircraft Maintenance Publication (AMP) systems are as follows:

- System 00 — A220 aircraft Introduction
- System 02 — Site Survey
- System 03 — Weight and center of gravity management
- System 04 — Leveling and lifting
- System 05 — Moving the aircraft
- System 06 — Reference data for aircraft
- System 07 — Lifting, shoring, recovering and transporting

Data module information codes are used to describe the activity related to the product about which the data module has been written. The information codes used in this publication are as follows:

- 012A - General warnings and cautions and related safety data
- 018A - Introduction
- 028A - Information of general nature
- 030A - Technical data
- 040A - Description of how it is made and its function
- 050A - Technical data
- 062A - Standard support equipment and tools
- 111A - Controls and indicators
- 178A - Tethering and ahoring
- 179A - Debogging

- 221A - Defuel and drain fuel
- 224A - Release nitrogen pressure
- 226A - Drain water
- 228A - Drain other liquid
- 231A - Bleed
- 251A - Clean with chemical agent
- 261A - Remove ice
- 271A - Adjust
- 510A - Disconnect procedure
- 562A - Depressurize hydraulics
- 730A - Connect procedure
- 913G - General maintenance safety procedure

1.2 Contents

1.2.1 Reference information

The reference information table identifies the DMC and title of each procedure given in the task, when a reference is made to a task the title of the task and the information type of the publication is shown. Refer to Table 2 .

Table 2 References

Data Module/Technical Publication	Title
BD500-A-J51-21-00-00AAA-010A-A	Corrosion control - General data
BD500-A-J51-26-00-00AAA-028A-A	Cleaning - General

1.2.2 Common information

The describes of the task intent and location of task. The following statement “The procedure for the left side is given. Differences for the right side are identified“ is used when the procedures is identical except for location.

1.2.3 Preliminary requirements

Refer to Chapter 06, Dimensions and areas, general for all the zones, doors, and information. In the procedures the information is found in the Production maintenance data section. To access the following information mouse over the link in blue.

- Zone - information is identified by number, description/side, and location
- Door - information is linked to the open/close data module
- Access panel - information is linked to the remove/install data module.

1.2.3.2 Frame Stations (FR) vs. Fuselage Stations (FS)

Frame Stations (FR) are used for the A220 aircraft publications. FR are reference planes found at right angles to the fuselage center line. Refer to BD500-A-J06-20-01-00AAA-030A-A for a table to show the relationship of FR to Fuselage Station (FS).

1.2.4 Required conditions

The required conditions identifies procedures that are required to perform the procedure.

1.2.5 Support equipment

The tools, fixtures, and test equipment that are necessary for a given maintenance task are listed in a table. The tools are recommended by Airbus A220. The aircraft operator can use equivalent tools, fixtures, or test equipment as alternatives to those given in the table (unless specified differently) if the items agree with the conditions that follow:

- Functionally interchangeable with those given in the table
- Applicable to the given maintenance procedure
- Equally safe for the person(s) who do the maintenance and for the equipment.

In some cases, the recommended tools and fixtures given in the maintenance procedure are given to make the removal or installation of a component easier, but are not necessary. While the maintenance procedure may specify these tools and fixtures to help the person(s) who do the maintenance, the maintenance procedure can be done even if the tool or fixture is not available (unless specified differently) with the conditions that follow:

- The intent of the maintenance procedure is not significantly altered and the revised maintenance procedure is approved by the engineering authority of the operator. Airbus assumes no responsibility for the precision of the revised maintenance procedure.
- The maintenance procedure remains equally safe for the person(s) who do the maintenance and for the equipment.

Note

Airbus remains the single source for procuring approved Airbus proprietary Ground Support Equipment (GSE) and tools. Vendors proprietary tools can be acquired either from Airbus or the vendors. All tools not being approved by Airbus or purchased from unapproved suppliers are under the responsibility of the users.

1.2.6 Consumables

Some of the AMP procedures contain a table that lists consumable materials. These tables identify the consumable materials that are necessary to do the maintenance procedure. A consumable material is defined as an item or material that is used once and is discarded when replaced.

Table 2 that follows shows the format and the types of consumable materials used in the AMP.The first two digits of the consumable number identifies the section where the consumable material is contained in the list. The last three digits are the sequence number for the consumable (e.g. Reference item number 05−004 identifies a consumable material found in Section 5, item number 4).

The consumable materials of the AMP. Refer to Table 3 .

- Product name
- Specification
- Type/Class/Grade
- Cage code

Table 3 Consumables references

Reference	Description
01-xxx	Fuels
02-xxx	Hydraulic Fluids
031-xxx	Oils
04-xxx	Common Greases
05-xxx	Special Materials
06-xxx	Lubricants
07-xxx	Lacquers
08-xxx	Bonding and Adhesive Compounds
09-xxx	Sealants
10-xxx	Anti-Icing and De-Icing Materials
11-xxx	Cleaning Agents
12-xxx	Strippers
13-xxx	Pre-Treatment for Painting and Sealing
14-xxx	Disinfectant
15-xxx	Preservation
16-xxx	Paints
17-xxx	Bacterial Contamination Protection Materials

1.2.7 Spares

Some of the AMP maintenance procedures contain a spares table. The spares table identifies the top level component that is illustrated in the procedure and indicates its location in the Illustrated Parts Data Publication (IPDP). The detailed components are identified in the IPDP. If you mouse over the blue link in the Identification/Reference column, a pop-up window will open with a link to the e IPDP.

Table 4 that follows shows the format and gives an examples:

Table 4 Spares

Name	Identification/Reference	Quantity	Remark
Electrical installation, cargo compartment door	CSN 52-30-03AAA001	1	

1.2.8 Safety conditions

Any warnings and cautions that apply to the whole procedure must be contained or referenced in this section.

1.2.9 Required conditions

This section gives all the procedures that must be done after the current procedure is completed. These required conditions are listed in a table and may reference circuit breakers, support equipment, data module references for standard practice, safety precautions, and data module references required to complete the procedure.

1.2.10 Definition of Warnings, Cautions, and Notes

1.2.10.1 Warning

A warning means that injury or death is possible if the instructions are not obeyed.

1.2.10.2 Caution

A caution means that damage to equipment is possible.

1.2.10.3 Note

Notes are added to give additional information, usually within a procedure. They are not written as instructions. Notes call attention to information only.

1.2.11 Acronyms

The first time an acronym is used it will be defined, and all subsequent uses will be in blue. When you mouse over the acronym the definition will appear. Acronyms are not plural in this publication.

1.3 Correspondence

The publications change request form is available online and is used to request technical changes to rectify any errors, omissions, or procedural inconsistencies (if applicable), etc. using the Airbus Navigator IETP.application.

Intentionally left blank

Aircraft Recovery Publication (ARP) process - Technical data

Applicability: 50001-54999, 55001-59999

Table of contents

Page

Aircraft Recovery Publication (ARP) process - Technical data 1
References 1
Description 3
1 Introduction 3
1.1 Purpose 3
1.2 General recovery 3
1.3 Recovery tools and equipment list 5
1.4 Survey: 11
1.5 Preparation: 12
1.6 Weight and center of gravity management: 12
1.7 Weight reduction: 12
1.8 Levelling and lifting: 12
1.9 Moving the aircraft: 13
1.10 Post-recovery actions: 14
1.11 Objective 14
1.12 Important notes 14
1.13 Types of occurrences 15
1.14 Response 15
1.15 General removal terms and definitions 15
1.16 Recovery teams 15
1.17 Runway excursions 15
1.18 Related data 16
1.19 Relevant websites 16

List of tables

Page

1 References 1
2 Documents and Data Module Code 5
3 Air Transportable Kits 5
4 Recovery Equipment 6
5 Recovery Equipment available from a Maintenance Base 6
6 General Equipment Available from Local Sources 9
7 Different lifting scenarios 13

References

Table 1 References

Data Module/Technical Publication	Title
BD500-A-J00-00-00-10AAA-018A-A	Illustrated tools and equipment publication - Introduction
BD500-A-J07-20-00-00AAA-177A-A	Stabilizing the aircraft - Stabilizing
BD500-A-J08-41-00-00AAA-030A-A	Weights and center of gravity limits - Technical data
BD500-A-J08-41-03-00AAA-030A-A	Center of gravity limits A220-100 - Technical data

Data Module/Technical Publication	Title
BD500-A-J12-10-28-00AAA-028A-A	Fuel system - Defueling - General
BD500-A-J12-10-28-01AAA-221A-A	Suction - Defuel and drain fuel
BD500-A-J12-10-28-03AAA-221A-A	Suction (no electrical power) - Defuel and drain fuel
BD500-A-J12-10-28-04AAA-221A-A	Gravity/suction using fuel tank water sump drains - Defuel and drain fuel
BD500-A-J07-10-00-00AAA-062A-A	Use of jacks - Standard support equipment and tools
BD500-A-J07-12-00-00AAA-062A-A	Use of pneumatic lifting bags - Standard support equipment and tools
BD500-A-J09-20-00-02AAA-170A-A	Moving damaged aircraft with cranes - Handling
BD500-A-J07-12-00-01AAA-171A-A	Aircraft with nose landing gear retracted, collapsed, or missing - Lifting
BD500-A-J07-12-00-02AAA-171A-A	Aircraft with nose landing gear retracted, collapsed, or missing with one or both engines missing - Lifting
BD500-A-J07-12-00-03AAA-171A-A	Aircraft with nose landing gear and one main landing gear collapsed, missing or retracted - Lifting
BD500-A-J07-12-00-04AAA-171A-A	Aircraft with nose landing gear and one main landing gear collapsed, missing, or retracted and one or both engines missing - Lifting
BD500-A-J07-12-00-05AAA-171A-A	Aircraft with one main landing gear collapsed, missing, or retracted - Lifting
BD500-A-J07-12-00-06AAA-171A-A	Aircraft with one main landing gear collapsed, missing, or retracted and one or both engines missing - Lifting
BD500-A-J07-12-00-07AAA-171A-A	Aircraft with all landing gears collapsed, missing, or retracted - Lifting
BD500-A-J07-12-00-08AAA-171A-A	Aircraft with all landing gears collapsed, missing, or retracted and one or both engines missing - Lifting
BD500-A-J07-12-00-09AAA-171A-A	Aircraft with both main landing gears collapsed, missing, or retracted - Lifting
BD500-A-J07-12-00-10AAA-171A-A	Aircraft with both main landing gears collapsed, missing, or retracted and one or both engines missing - Lifting
BD500-A-J07-12-00-11AAA-171A-A	Tail tip incident - Lifting
BD500-A-J07-40-00-04AAA-028A-A	General and quick reference checklist for aircraft recovery - General
BD500-A-J09-11-00-01AAA-174A-A	Towing of the aircraft with towbar - Towing

Data Module/Technical Publication	Title
BD500-A-J09-11-00-02AAA-174A-A	Towing of the aircraft without towbar - Towing
BD500-A-J09-13-00-00AAA-028A-A	Debogging - General

Description

1 Introduction

1.1 Purpose

The purpose of this publication is to assist aerodrome and aircraft operators in addressing the issues related to disabled aircraft in an aerodrome environment. In the past, minor incidents have been handled with relative ease. As the size and mass of aircraft increased, the complexities of the removal procedures have increased proportionately. With the advent of the New Larger Aircraft (NLA), categorized under a new aerodrome reference code letter F, additional, larger and more complex recovery equipment is required. This publication is designed to assist both aerodrome and aircraft operators in identifying the relevant problems, then preparing and implementing an adequate plan of action to remove the disabled aircraft.

1.2 General recovery

This document shows the procedures, prerequisites necessary to do the recovery for the model A220-100 and A220-300 aircraft. Airbus supplies this data for the recovery of damaged aircraft from airport runways and adjacent areas.

The procedures in this document apply only after the applicable local authority releases the damaged aircraft to the airline. In Canada, the Transport Canada releases the aircraft. When you are out of Canada, the local authority of the place, where the unplanned incident/accident occurs, releases the aircraft. Make sure that you get an approval from the local authority for all the procedures that you use.

Water recovery operations are not shown in this document. A water recovery operation includes more careful decisions than other recovery operations. You must examine the effects of the items that follow:

- The depth of the water
- The location of the accident
- The possible effects on airport operations
- The possible effects on waterway operations
- The aircraft condition and extent of salt water corrosion will determine recovery procedures
- The available equipment.

Recovery procedures shown in this document are only general procedures. The procedures that you use will possibly be different. They will change with the conditions at the accident location and the available recovery equipment.

You can lift the aircraft with jacks, pneumatic bags, or cranes. After you lift the aircraft, you must move it to a work area. An airline can tell other airlines about the data from its recovery operations. They can do this through the Air Transport Association (ATA), the International Air Transport Association (IATA) or other groups.

Make sure that only persons who are approved can go into the recovery location. This prevents or decreases problems in these areas:

- Decreases the danger from contamination, debris, and sharp objects
- Decreases the danger from any fires
- Stops any removal of equipment and aircraft components that is not approved
- Prevents damage to important data that is necessary for the accident inspection
- Controls the access of any media persons and other persons who are not approved
- Controls the equipment persons and the other persons in the recovery operation.

The need to recover an aircraft is always the result of an accident. To prepare for a recovery operation, make sure that you have persons available who have the correct instructions. Also, make sure that you have the correct recovery equipment available. Without good procedures and equipment, the aircraft can receive secondary damage during the recovery operation.

You must prepare the following recovery instructions before it occurs:

- Refer to BD500-A-J07-40-00-04AAA-028A-A for recovery team persons and recovery plan quick check list
- Refer to BD500-A-J00-00-00-10AAA-018A-A for tools and equipment
- Refer to Table 3 thru Table 6 for recovery tools and equipment list.

You must have a satisfactory communication system that permits all recovery persons to speak to other recovery persons during the operation. Headphones and light (portable) transceivers are the best system you can use. Approval from the local authority may be necessary to operate them. Headphones with the correct transceivers are good equipment items for a recovery kit for all possible locations.

- The control person at the airport
- The local fire persons and the emergency persons
- The security persons at the airport entrances
- The local telephone system as it is necessary.

Make sure that you can speak with the following important persons from your recovery control center:

- Recover and store deployed escape slides in a safe place
- Prevent possible damage to the wire bundles and fabric surfaces from rodents.

Make sure that you prevent more damage to the aircraft from temperature, water, humidity, and/or some other possible problems as follow:

Make sure that the temporary structures are installed at the incident location for the following functions:

- Special area to speak to other persons (telephone, fax) for the control of the operation
- Special area for the recovery persons (eat, drink and toilet)
- Special safe area for the location and the maintenance of tools and equipment.

Many different documents have the data that is possibly necessary for a good recovery operation. It is important to have these documents with you at the recovery location. Refer to for specific documents and numbers that apply to your model aircraft and engines. Refer to Table 2 ,

the following publications may be found using the Airbus A220 Interactive Electronic Technical Publication (IETP) viewer.

Table 2 Documents and Data Module Code

Publication	A220-100 Publication Module Code (PMC)	A220-300 Publication Module Code (PMC)
Aircraft Maintenance Publication (AMP)	BD500-3AB48-10200-00	BD500-3AB48-10200-00
Aircraft Schematic Diagrams Publication (ASDP)	BD500-3AB48-10500-00	BD500-3AB48-10500-00
Illustrated Parts Data Publication (IPDP)	BD500-3AB48-11300-00	BD500-3AB48-11300-00
Illustrated Tools and Equipments Publication (ITEP)	BD500-3AB48-11600-00	BD500-3AB48-11600-00
Aircraft Structural Repair Publication (ASRP)	BD500-3AB48-10600-00	BD500-3AB48-10600-00
Aircraft Recovery Publication (ARP)	BD500-3AB48-10400-00	BD500-3AB48-10400-00
Maintenance Facilities and Equipment Planning Publication (MFEPP)	BD500-3AB48-11000-00	BD500-3AB48-11000-00
Component Maintenance Publication (CMP)	BD500-3AB48-10800-00	BD500-3AB48-10800-00
Maintenance Planning Document (MPD)	BD500-3AB48-11500-00	BD500-3AB48-11500-00
Aircraft Planning Publication (APP)	BD500-3AB48-22000-00	BD500-3AB48-32000-00
Ramp Servicing Publication (RSP)	BD500-3AB48-11800-00	BD500-3AB48-11800-00
Weight and Balance Manual (WBM)	BD500-3AB48-22100-00	BD500-3AB48-32100-00
Engine Manual (EM) PW 1200G/1500G	PW1000G-77445-05818-01	PW1000G-77445-05818-01
Power Plant Build-up Manual (PPBM)	PW1000G-A-71-00-00-00A-018A-D	PW1000G-A-71-00-00-00A-018A-D

1.3 Recovery tools and equipment list

Refer to Table 3 for list of the air transportable kits.

Table 3 Air Transportable Kits

Item	Description	Quantity
1	25 ton pneumatic lift bags and repair kits	8
2	Portable air compressors, 50 SCFM (1415 L/min), 1 to 4 psi, manifolds and hoses	3
3	Mattresses or similar material for padding	8
4	Earth screw anchors	10
5	Plywood sheets, 4 ft x 8 ft (1.22 m x 2.44 m), 1 in. (25 mm) thick	24

Item	Description	Quantity
6	Rope, 1 in. (25 mm) diameter, 500 ft (152.4 m) long	-
7	Come-along or ratchet hoist, 2 ton capacity	4
8	Short-stroke aircraft axle or screw jack, 30 to 50 ton capacity	3
9	Steel plates, 2 ft x 2 ft (0.61 m x 0.61 m), 0.5 in. (13 mm) thick	6
10	Light alloy access ladder, 15 ft (4.6 m)	1
11	Electric power unit for emergency lighting, 5 kW or larger	1
12	Floodlights, lamp stands, leads, junction boxes, and 50 ft (15 m) extension cord	4

Note

This equipment is airline-owned and is shared among member airlines. It is also available to non-members on a rental fee basis.

The total content of a kit may vary from one custodian airline to another. The kit may also contain other specialized equipment which the custodian airline provides.

Refer to Table 4 for list of the recovery equipment.

Table 4 Recovery Equipment

Part Number	Description	CAGE Code	Quantity
None	Lift sling, Aircraft fuselage	3AB48	1
None	Spreader	3AB48	1
DS096K01	Bridle kit	N/A	1
CG9000034-0001	Mooring kit	3AB48	1
AR095A	R2S-5 lifting column (A220)	N/A	3

Refer to Table 5 for list of the recovery equipment available from a maintenance base.

Table 5 Recovery Equipment available from a Maintenance Base

Part Number	Description	CAGE Code	Quantity
CG900054-0007	Jacking pad kit	3AB48	1
D03034 or FEN301	Wing jack	1JJE1	2
D01258 or FEN122	Forward fuselage jack	1JJE1	1
8616B	NLG axle jack	94861	1
832R	MLG axle jack	94861	1
OA-NBH-1300	MLG removal/installation tool	1T0V3	1

TOWCS300-C-2 **Note** Not procurable, no longer manufactured, replaced by tool P/N: TOWCS300S20SH1	Towbar	1JJE1	1
TOWCS300S20SH1	Towbar	1JJE1	1
TOWCS300-C-18	Towbar, Collapsible (Air)	1JJE1	1
99-9028-6000	Wheel chocks, MLG/NLG	59603	4
MS14531-1C841211	Ground lock pin, MLG/NLG	9094	1
999-1100-4GSE	Cover, Engine intake	3B116	2
999-3001-12GSE	Plug, Engine bypass	3B116	2
999-4100-5GSE	Cover, Engine exhaust	3B116	2
H10-60C	Headset, Ground	04UP0	1
CIX213G/25-51	Cord, Headset extension (50 ft)	04UP0	1
None	Drain Kit, Defuel	None	1
None	Dolly, MLG/NLG removal/installation	None	1
C02181500-001-HFIX	APU removal/installation hoisting points	0007B	1
PWA-115185 (AGSE-E240-G02)	Engine dolly	096T6	A/R
CG9000042-0009	Engine bootstrap kit	98441	1
384KR	Cover, Ice detector	L9209	2
196KR	Cover, TAT	L9209	2
522KR	Cover, Water drain mast, Fwd fuselage	Z302S	1
522KR	Cover, Water drain mast, Aft fuselage	Z302S	1
521KR	Cover, Fuel drain mast	Z302S	1
518KR	NACA plug, Fuel surge vent	Z302S	2
513KR	Wheel cover, MLG	L9209	2
514KR	Wheel cover, NLG	L9209	1
516KR	NACA plug, FTIS intake	L9209	1
517KR	NACA plug, BTWF-Aft	L9209	1
519KR	Cover, Louver panels, Large (AFT)	L9209	2

523KR	Plug, ESC exhaust	L9209	1
520KR	Cover, Louver panels, Small (FWD)	L9209	2
515KR	NACA scoop plug, ECS intake, Large (A220-100)	L9209	2
526KR	Cover, Fuselage vent	L9209	2
527KR	Cover, Fuselage vent	L9225	1
CANT 03	DME/ATC	13499	3
CANT 01	VHF antenna (RC 822-2778)	13499	2
0061CJ1	Cover, AOA vane	59885	2
KPC4T-780-45	Cover, ADSP (Smart probe)	0P9C7	4
515KR-300	NACA scoop plug, ECS intake, Large (A220-300)	Z302S	2
525KR	Plug, APU exhaust (Tail pipe)	L9232	1
C01637405-002GT00-02	Pintle fuse pin extraction tool	K4585	1
6263A2800-01	Retraction actuator bolt extractor, MLG	D9893	1
C01637405-GT00-02	Extractor (A220-100)	3AB48	1
C01677405-GT00-02	Extractor (A220-300)	3AB48	1
CG9000109-0005	Aft pintle extractor	3AB48	1
4115-0081W01	Wheel nut socket, MLG	D9893	1
2000A5629K01	Wheel nut socket, NLG	D9893	1
6263A5000-01	MLG aft pintle pin removal/installation tool	D9893	1
4124-0201W28	NLG wheel axle thread protector	D9893	1
6263-6104	MLG wheel axle thread protector	D9896	1
UL-3200	Universal lifter	1TOV3	1
UL-32100-CS	Side brace head	1TOV3	1
UL-32200-CS	Drag brace adaptor	1TOV3	1
UL-32300-CS	Retract actuator head	1TOV3	1
CG9000109-0007	MLG tool kit	3AB48	1
999-1100-1GSE	Inlet cowl sling	3B116	1
999-2000-1GSE	Fan cowl door sling	51563	1

999-3001-1GSE	Thrust reverser sling	3B116	1
6263A0400-01	NLG pintle pin removal/installation tool	D9894	1

Refer to Table 6 for list of the general equipment available from local sources.

Table 6 General Equipment Available from Local Sources

Item	Description	Quantity	Used for
1	Work lights	2	
2	Flood lights	8	
3	Ballast bags, 50 lbs (25 Kg) capacity	As required	
4	Plywood sheets, 4 ft x 8 ft (1.22 m x 2.44 m), 1/4 in. (6.3 mm) thick	20	For placement between aircraft skin and pneumatic lift bags.
5	Plywood sheets, 4 ft x 8 ft, (1.22 m x 2.44 m), 1 in. (25 mm) thick	20	To be used as a mat over soft earth to move aircraft or equipment.
6	Steel plates, 3 ft x 3 ft, (0.91 m x 0.91 m), 3/4 in. (19 mm) thick	As required	For ground reinforcement under jacks to increase bearing area. Sub-surface preparation may be required on soft earth.
7	Aluminum plates, 5 ft x 5 ft (1.52 m x 1.52 m), 3/4 in. (19 mm) thick	50	For easy handling when used as jack supports.
8	Ground cover, planking plates of steel or aluminum (for example, old cargo pallets)	As required	For ground reinforcement under jacks to increase bearing area. Sub-surface preparation may be required on soft earth.
9	Cribbing timbers, 6 in. x 8 in. (152 mm x 203 mm), 8 ft (2.4 m) long (old railway ties) to build platforms for air bags	As required	For platforms to support pneumatic bags
10	Steel spikes (nails) for crib assembly	200	
11	Ground reinforcement mats, 150 to 300 ft (50 to 100 m) long	As required	Provides a rolling surface over the earth to permit aircraft towing.
12	Crushed rock or gravel	As required	Fill holes, level ground
13	Rope, 1-1/4 in. (32 mm) diameter	500 ft (152.4 m) or as required	
14	Pulley blocks, double sheave for 1-1/4 in. (32 mm) diameter rope	4	
15	Ladders, 10, 20, 30 ft (3, 6, 9 m)	As required	

16	Mobile shelter (trailer, etc.)	-	
17	Forward fuselage support (commercial transport trailer with pivoting deck or cradle, 20 ton capacity)	1	
18	Water pump, 50 to 100 gpm (227 to 454 L/m), engine driven, with 100 ft x 3 in. (30.7 m x 76 mm) inlet hose and 400 ft x 2 in. (123 m x 50 mm) outlet hose	2	
19	Air lifting bags, 25 ton capacity, high stability, 10 ft x 5 ft (3 m x 1.5 m) with a 5 ft (1.5 m) minimum inflated height. Also, protective pads, hoses, and control system	4	
20	Air compressors, portable, engine driven, capable of inflating the lifting bags	As required	
21	Mobile crane(s), 2 ton minimum capacity at 20 ft (6 m) hook height (for engine removal)	1	For engine removal
22	Mobile crane(s), 50 ton minimum capacity at 30 ft (9 m) hook height (to lift the fuselage)	2	
23	Tethering/stabilizing supplies to stabilize the aircraft during lifting (eight off 100 ft (30.7 m) cables; tie-downs rated at 5 tons; tensioning devices; earth anchors and fittings to attach to the aircraft)	As required	
24	Miscellaneous tools (shovels, picks, crowbars, sledgehammers, hoes, chain saws, hammers, nails, boit cutters, metal shears, etc.)	As required	
25	Aircraft towing tractors, bulldozers, forklifts, cranes, winching vehicles, backhoes, cherry pickers, bucket loaders for excavation, etc.	As required	
26	On-site communication (headsets, microphone sets, etc.)	As required	
27	Multi-wheel, flatbed trailer, 35 ton (35,000 Kg)	1	To move aircraft in lieu of landing gear
28	Electric generator, gasoline powered, 5 kVA or larger	1	
29	Communication equipment	As required	
30	Megaphones with self contained amplifiers	As required	For communicating during actual aircraft lifting and movement. Hand held transceivers may be alternative.

31	Grounding rod, 10 ft (3 m) copperloy coated steel with 60 ft (18 m) cable and clip	_	To provide grounding of aircraft while defueling.
32	Fencing material and "Danger - Keep Out", "Smoking Prohibited" signs to restrict work area to authorized personnel.	_	
33	Earth moving equipment, bulldozer or equivalent	1	
34	Gasoline powered compressor to operate pneumatic tools	2	
35	Air powered rotary metal cutting saw for clearing of wreckage.	1	
36	Bolt cutters, sheet metal shears	_	
37	Basic tools, picks, shovels, crowbars, sledge hammers, handsaw, etc.	As required	
38	Tow Tractor	1	
39	Heater units for cold weather operation	As required	
40	Tarpaulins, 8 ft x 12 ft (2.44 m x 3.66 m)	As required	
41	Railroad Ties	As required	
42	Flashlights (Hand held)	As required	
43	Used rubber tires	As required	
44	Felt padding or equal	As required	
45	Mattresses (Household type)	As required	For padding

1.4 Survey:

There is a time period between notification of the accident/incident to the Aircraft Accident Investigation Authority and release by the Investigation Authority to allow access to the aircraft. During this time a number of preliminary tasks can be completed in preparation for removal and some of these tasks include the following:

- Recovery team persons
- Prior to release of the aircraft by the investigation authority
- Aircraft removal cost template
- Quick reference guide for airplane recovery
- Initial site survey
- International Airlines Technical Pool (IATP).
- Communication with the aerodrome operator and the investigative authorities
- If applicable, identification of what types of dangerous goods were being carried on board as cargo

- Drawings/maps of the aerodrome to asses the access routes to the site
- Transportation of the required personnel to and from the removal site
- Vaccinations, passports, visas and certificates
- Hotel accommodations and local transportation.

1.5 Preparation:

The main issues associated with the preparation phase of the removal operations are as follows:

- General stabilizing data BD500-A-J07-20-00-00AAA-177A-A.

1.6 Weight and center of gravity management:

An accurate determination of the weight and centre of gravity location of the aircraft is essential in determining the following:

- Center of gravity terms and definitions BD500-A-J08-41-00-00AAA-030A-A
- Weights and center of gravity limits BD500-A-J08-41-03-00AAA-030A-A
- The longitudinal and lateral balance limits not to be exceeded during the recovery operation.

1.7 Weight reduction:

The importance of weight reduction relates to actual removal of weight from the aircraft. Caution must always be exercised during any weight reduction operation, as a significant shift in the centre of gravity can take place when fuel and cargo are removed. The main issues associated with the weight reduction phase of the operation are:

- Defueling BD500-A-J12-10-28-00AAA-028A-A.
- De-fuel scenarios BD500-A-J12-10-28-00AAA-028A-A, BD500-A-J12-10-28-01AAA-221A-A, BD500-A-J12-10-28-03AAA-221A-A, and BD500-A-J12-10-28-04AAA-221A-A.

1.8 Levelling and lifting:

This section give the procedures and processes required when levelling/lifting disabled aircraft. Each aircraft recovery incident is unique and must be thoroughly evaluated prior to any levelling/lifting operations being initiated. The required steps are given below:

- Load determination
- General preparation and instructions for lifting the aircraft with jacks BD500-A-J07-10-00-00AAA-062A-A.
- General preparation and instructions for lifting the aircraft with pneumatic lifting bags BD500-A-J07-12-00-00AAA-062A-A.
- General preparation and instructions for lifting the aircraft with cranes BD500-A-J09-20-00-02AAA-170A-A.
- Different lifting scenarios. Refer to Table 7 .

Table 7 Different lifting scenarios.

Scenarios	A220-100 & A220-300
Leveling and lifting the aircraft with nose landing gear retracted, collapsed or missing	BD500-A-J07-12-00-01AAA-171A-A
Leveling and lifting the aircraft with nose landing gear retracted, collapsed, or missing with one or both engines missing	BD500-A-J07-12-00-02AAA-171A-A
Leveling and lifting the aircraft with nose landing gear collapsed, missing or retracted and one maine landing gear collapsed, missing, or retracted	BD500-A-J07-12-00-03AAA-171A-A
Leveling and lifting the aircraft with nose landing gear collapsed, missing, or retracted and one main landing gear collapsed, missing, or retracted and one or both engines missing	BD500-A-J07-12-00-04AAA-171A-A
Leveling and lifting the aircraft with one main landing gear collapsed, missing, or retracted	BD500-A-J07-12-00-05AAA-171A-A
Leveling and lifting the aircraft with one main landing gear collapsed, missing, or retracted and one or both engines missing	BD500-A-J07-12-00-06AAA-171A-A
Leveling and lifting the aircraft with all landing gear collapsed, missing, or retracted	BD500-A-J07-12-00-07AAA-171A-A
Leveling and lifting the aircraft with all landing gear collapsed, missing, or retracted and one or both engines missing	BD500-A-J07-12-00-08AAA-171A-A
Leveling and lifting the aircraft with both main landing gear collapsed, missing, or retracted	BD500-A-J07-12-00-09AAA-171A-A
Leveling and lifting the aircraft with both main landing gear collapsed, missing, or retracted and one or both engines missing	BD500-A-J07-12-00-10AAA-171A-A
Tail tip inciden	BD500-A-J07-12-00-11AAA-171A-A

1.9 Moving the aircraft:

When the aircraft is stabilized, levelled or lifted, move it back to a hard surface and possibly to a repair facility. It is recommended to move a damaged aircraft supported on the landing gear. If an aircraft is moved to the hard surface, a temporary roadway is usually required before the movement of the aircraft. The removal manager will need to determine the following:

- Preparing a roadway.
- Commercial temporary roadway systems.
- Transportation of the damaged aircraft.
- Towing of the aircraft with towbar refer to BD500-A-J09-11-00-01AAA-174A-A or without BD500-A-J09-11-00-02AAA-174A-A.

- Moving the damage aircraft.
- Debogging aircraft. Refer BD500-A-J09-13-00-00AAA-028A-A.

1.10 Post-recovery actions:

Once the aircraft has been recovered and moved to a repair or inspection facility, the details of the recovery must be recorded. These details include but are not limited to the following:

- Data recording
- Incident reporting
- Details on any resultant secondary damage.

1.11 Objective

The objective of this document is to identify the issues involved in removing immobilized or disabled aircraft. The processes and procedures required to return the aircraft to a hard surface are described.

The aircraft recovery process is dependent on a number of variables. There are five generally accepted major steps identified with the removal process that will be covered in detail:

- Survey
- Planning
- Preparation
- Recovery
- Reporting processes.

1.12 Important notes

Aircraft should not be moved without the approval of the Accident Investigation Authority (AIA). Except as specified in Annex - 13 Aircraft Accident and Incident Investigation, wreckage of aircraft should be left undisturbed until the arrival of the Investigator-in-Charge of the accident investigation. Detailed guidance on the initial action at the scene of the accident, preservation of the evidence, etc., may be found in the Manual of Aircraft Accident Investigation (Doc 6920).

In exceptional circumstances, where safety of other aircraft is imperilled, the disabled aircraft should be removed as quickly as possible. If the aircraft or parts thereof must be moved prior to completion of the investigation, it is important that such an operation not be carried out until:

- Photographs are taken
- The location and position of all major components are marked on the ground
- A diagram of the accident site including ground scars is drawn.

The photographs should include general views of the aircraft from four directions. Photographs of the flight deck showing the position of all switches and controls should also be included. The location and position of the aircraft and its separated parts should be indicated by driving stakes into the ground or by markings on the surface, as appropriate. The diagram of the accident site, preferably prepared on squared paper, should record the location of all major components and their relative position with respect to a reference point or line. Detailed information on photographs to be taken and preparation of diagrams is contained in Doc 6920. If, in the removal

operation, the aircraft or any part thereof is further damaged, such damage, referred to as secondary damage, should be recorded so that it can be distinguished from impact damage.

1.13 Types of occurrences

An aircraft removal incident can occur at any time and in any weather conditions with varying degrees of magnitude. These removal incidents can range from minor debogging to major events including damaged or missing landing gear. The recovery process may take from a few hours to many days depending on the severity. While recovery incidents cannot be predicted, they can be anticipated and prepared for.

1.14 Response

The removal of some disabled aircraft can be a complex scenario involving a number of specific procedures including multiple leveling and lifting actions. These procedures can be dangerous, and safety precautions must take precedence over all other constraints. Prevention of secondary damage must also be a priority. In some cases, the removal process cannot begin until a lengthy investigation by the onsite investigative authority has been completed, and the aircraft is formally released. Because of these issues, it is not always possible for the aerodrome to be cleared as quickly as desired by the aerodrome operator.

1.15 General removal terms and definitions

There are three general terms used in the removal of disabled aircraft:

- Aircraft debogging: The removal of an aircraft from a runway or taxiway excursion where the aircraft has become bogged down but has relatively little or no damage is considered a “debogg“.
- Aircraft recovery: Any aircraft that is unable to move under its own power or through the normal use of an appropriate tow tractor and tow bar will be considered an “aircraft recovery“, examples are:
    - One or more landing gear off the hard surface of a runway, taxiway, or apron
    - Aircraft bogged down in mud or snow
    - One or more landing gear collapsed or damaged
    - An aircraft that is considered to be economically repairable.

1.16 Recovery teams

We recommend that each airline include a recovery team. Use persons who are knowledgeable about aircraft recovery procedures and operations. Also use persons who can operate recovery equipment.

1.17 Runway excursions

There are numerous factors contributing to aircraft recovery events arising from runway excursions, and these can be generalized as follows:

- Flight control system failures
- Power plant such as actual engine failure or failure of the thrust reversal system
- Landing gear such as hydraulics, brakes, tires, steering
- Weather such as rain, snow, ice, crosswinds, visibility, and runway friction
- Maintenance, weight and balance and

- Human factors such as flight crew.

Most runway excursions are minor in context but can still cause significant damage to the aircraft resulting in major recovery initiatives to be taken.

1.18 Related data

The following documents must be reviewed for additional information on removal of disabled aircraft:

- Annex 14 - Aerodromes, Volume I - Aerodrome Design and Operations
- Annex 13 - Aircraft Accident and Incident Investigation
- Airport Services Manual (Doc 9137):
  - Part 1 - Rescue and fire fighting
  - Part 7 - Airport emergency planning
  - Part 8 - Airport operational services.
- Operation of NLA at existing aerodromes (Circular 305)
- Regulations of the state of occurrence of the accident/incident
- Local airport operator disabled aircraft removal plan and related emergency plans
- Transport Canada Administration Advisory Circular
- Specific Aircraft Recovery Publication (ARP) of the manufacturer
- Specific weight and balance publication
- Aircraft removal process document of the aircraft operator.

1.19 Relevant websites

The following websites are suggested for additional information:

- International Civil Aviation Organization (ICAO): http://www.icao.int
- International Air Transport Association (IATA): http://www.iata.org/workgroups/emg
- IATP: http://www.iatp.com.

Site survey

Applicable to: All

Intentionally left blank

Health and safety issues - General warnings and cautions and related safety data

Applicability: 50001-54999, 55001-59999

Table of contents

Page

Health and safety issues - General warnings and cautions and related safety data..... 1
References..... 1
Description..... 1
1 General..... 1
2 Introduction..... 1
2.1 Protective equipment for personnel..... 1
2.2 Contracted equipment operators..... 2
2.3 Recovery equipment..... 2
2.4 Dangerous material..... 2
2.5 Biological dangerous materials..... 2
2.6 Oxygen system..... 3
2.7 Electrical system..... 3
2.8 Fuel system..... 3
2.9 Dangerous goods crew..... 4
2.10 Fire safety..... 4
2.11 Other safety-related issues..... 4

List of tables

Page

1 References..... 1

References

Table 1 References

Data Module/Technical Publication	Title
BD500-A-J51-73-00-00AAA-913A-A	Composite repairs - General maintenance procedure

Description

1 General

This data module gives the information on the health and safety related issues that need to be identified during recovery of an aircraft.

2 Introduction

Make sure that all the personnel involved in aircraft recovery operation are safe during the recovery operation. Take all the necessary steps to prevent personal or unnecessary injury.

2.1 Protective equipment for personnel

Make sure that correct personal protective equipments are available for the persons involved in the aircraft recovery procedure. The type of equipment will change because of the severity of

the incident or the accident and the weather conditions. Everyone in the aircraft recovery team must know the different types of equipment available and the procedure to use the equipment. Protective equipment includes the items as follows:

- Hard hats
- Safety boots
- Protective gloves
- Coveralls such as Tyvek or equivalent
- Particulate dust masks
- Respirators
- Rain-suits.

The knowledge about the local poisonous plants, insects and snakes will help to identify the necessary additional protective equipment.

2.2 Contracted equipment operators

During the meeting about the safety instructions, include the contracted personnel and equipment operators. Tell the heavy equipment operators about the basic aircraft safety instructions including the concerns of overloading equipment and the subsequent dangers, because they have less experience to work near the aircraft. These safety instructions must also include maximum lifting loads during crane lifts, and the necessary to follow the instructions of a clearly identified authority.

2.3 Recovery equipment

The aircraft recovery manager has to make sure that all the recovery equipments are correctly rated for the possible loads. Visually examine all the recovery equipment before use and then make sure that the tags have correct load ratings and dates.

2.4 Dangerous material

Dangerous materials at an accident or incident site include aircraft parts that are made from composite materials and the dangerous goods carried in the aircraft as cargo. Another dangerous material is the depleted uranium, which is used as balance weights in the aircraft.

Make sure that the cracked, broken, or torn materials are handled carefully to avoid the personal injuries. However, composite aircraft materials must be handled with caution when they are broken, torn, or burned. For more information on the composite material of A220-100 and A220-300, refer to BD500-A-J51-73-00-00AAA-913A-A.

2.5 Biological dangerous materials

The risk of blood-borne disease at an accident or incident location can change with the severity of the incident. In many jurisdictions, the individuals with the blood pathogen training certificate are only permitted to access the aircraft at the accident or incident site. The aircraft recovery personnel must know the local rules of the State or the area where the aircraft is recovered.

Give training to all aircraft recovery personnel about the blood borne diseases. Important areas of this training include the item that follows:

- Biological risks associated with the aircraft accident or incident investigation and the subsequent recovery operation
- Recognition of biological risks

- The exposure control plan with procedures used to control exposure to blood-borne disease
- Different modes of the blood-borne disease transmission
- Hepatitis B virus vaccination information
- Personal protective equipment.

2.6 Oxygen system

While working on the onboard oxygen system, make sure that only experienced personnel are involved and all applicable safety precautions are followed.

When the aircraft is stable, manually close the valves of the oxygen bottles then remove the bottles from the aircraft. Secure or remove the cabin oxygen generators based on:

- The condition of the aircraft
- The anticipated dangers
- The time required to remove.

2.7 Electrical system

While working on the electrical system, make sure that only experienced personnel are involved and all applicable safety precautions are followed.

When the aircraft is stable, do the steps that follows:

- Before you energize the electrical network, do a detailed inspection of the aircraft electrical system.
- Examine the cockpit to make sure that all the switches and selectors are in the correct position and the aircraft electrical system is serviceable and secured.
- Record all the change in position of the switches or the selectors.
- Make sure that all the applicable cautions and warnings are followed.
- Disconnect the aircraft main batteries, if the electrical system is unserviceable.
- Explosive "squibs" operate the fire extinguishers in remote locations. If there is doubt about the serviceability of the aircraft electrical systems, disconnect or remove the fire extinguishers.
- Ground the aircraft.
- Safety the Ram Air Turbine (RAT) with the safety-retaining device to prevent accidental deployment.

2.8 Fuel system

While working on the fuel system, make sure that only experienced personnel are involved and all applicable safety precautions are followed.

Do the steps that follow for the fuel system:

- If fuel leaks, defueling of the aircraft is important.
- Refer the initial aircraft survey results. It will show if there is a fuel leak from the wings, fuselage, or engines.
- Make sure that all the leaks are identified and reported to the applicable aerodrome personnel concerned for necessary step.

- If possible, temporarily repair or plug the minor leaks. If fuel leaks defuel the aircraft.
- When the aircraft is stable and there is no leak, do a detailed inspection of the fuel system.
- After the fuel system is declared serviceable, remove or use the fuel for stability control.
- If the electrical system is serviceable, use the components of the fuel system to defuel or for the movement of fuel between tanks.

2.9 Dangerous goods crew

Because of the widespread concern for environmental issues, especially around aerodromes a dangerous goods clean-up crew, also known as a hazardous material crew, must be available to stop all fluid spills or leaks. Clean and remove all the fluid spills or leaks from the aerodrome.

Make sure that the dangerous goods clean-up crew have the necessary materials to clean all the fluid spills and leaks, that includes fuel, hydraulic fluid, and waste systems. Aerodrome operators can contract with companies to clean or remove the fluid spills and leaks.

The aerodrome operator, at the first sign of a spill or leak, must tell the dangerous goods clean-up crew. Aircraft operators must include the dangerous goods clean-up crew in their contact information or the aircraft recovery process document.

2.10 Fire safety

Aerodrome rescue and fire fighting service personnel and vehicles must be in place at the incident site during the defuel operation or the levelling or lifting operations. Obey no smoking zones at all time during the defuel operation and levelling or lifting operation.

2.11 Other safety-related issues

One more important safety issue is the inspection of aircraft wheels. Approved persons must examine the wheels to make sure that the wheels and the rims are serviceable. The pressure and volume of air in the tires could cause dangerous risks, if the wheels or wheel rims fail.

A220

Prepare a roadway - Preparation for vehicle transportation

Applicability: 50001-54999, 55001-59999

Table of contents

Page

Prepare a roadway - Preparation for vehicle transportation..... 1
References..... 1
Common information..... 1
Preliminary requirements..... 1
Procedure..... 2
Requirements after job completion..... 8

List of tables

Page

1 References..... 1
2 Required conditions..... 1
3 Support equipment..... 2
4 Consumables, materials, and expendables..... 2
5 Spares..... 2
6 Required conditions..... 8

List of figures

Page

1 Preparation of road way..... 5

References

Table 1 References

Data Module/Technical Publication	Title
BD500-A-J07-40-00-02AAA-028A-A	Leveling and lifting - General

Common information

This data module gives the procedure to prepare a roadway where the wheel traction of the aircraft and the aircraft recovery vehicle is not sufficient.

Preliminary requirements

Required conditions

Table 2 Required conditions

Action/Condition	Data Module/Technical publication
None	

Support equipment

Table 3 Support equipment

Name	Identification/Reference	Quantity	Remark
None			

Consumables, materials, and expendables

Table 4 Consumables, materials, and expendables

Name	Identification/Reference	Quantity	Remark
None			

Spares

Table 5 Spares

Name	Identification/Reference	Quantity	Remark
None			

Safety conditions

None

Procedure

1 Prepare the roadway as follows:
Refer to Fig. 1 .

WARNING

Put safety devices, warning signs, and placards in position before you start a procedure on or near flight control surfaces and components that move. Movement of flight control components can cause injury to persons and/or damage to equipment.

1.1 General:

1.1.1 Make sure that the aircraft is officially released by the investigative authorities for the recovery operations.

1.1.2 Make sure that the aircraft is levelled and lifted to certain height to do necessary operations. Refer to BD500-A-J07-40-00-02AAA-028A-A.

1.1.3 The aerodrome operators and the aircraft operators are recommended to speak with the local contractors or the construction companies which can help in the preparation of the roadways.

1.1.4 The aerodrome operators and/or the major aircraft operators at each aerodrome must give a “General Aircraft Removal Materials and Equipment“ list that must include the location and availability of each item.

Note

There are number of temporary roadway systems commercially available in the market. These temporary roadway systems can be prepared by aluminum or composite sections that can be fitted or bolted together. Fiberglass and carbon fiber matting are also available for this purpose.

1.2 The basic requirements of the roadways are as follows:

Note

Most of the aerodromes will have various types of crushed stone, gravel, or broken asphalt available. It can be used as a base for the roadway.

1.2.1 The roadway must support the weight of the aircraft and the vehicles used to remove it.

1.2.2 The width of the roadway must be sufficient to turn the aircraft, if necessary.

1.3 Make sure that the soil stability analysis reports are strictly obeyed during the recovery operation.

1.4 If the soil load bearing capacity is high and the tire marks left by the aircraft tires do not have too much depth, it is sufficient to fill the tire marks with the gravels. Subsequently move the aircraft rearwards along the same path (No need to prepare separate roadway).

Note

The material can be compacted gravel or railway ties/sleepers covered with sheet steel or thick plywood.

1.5 If the large timbers or railroad ties are used in the construction of a roadway, they must be covered with a layer of sheet material, such as plywood or steel. This prevents the loads of individual aircraft wheels from the pushing the timbers into the ground or against the wheel behind it which can stop the aircraft.

1.6 If the soil load bearing capacity is low, excavate the roadway to a depth that will let the finished roadway to support the weight of the aircraft.

The depth of the excavation depends upon the soil stability. Use the large gravels to give a strong base.

Put the plywood sheets or steel plates over the gravel bed as roadway.

1.7 If the soil is very soft, put the railroad ties laterally over the gravel. Subsequently cover with the plywood or steel sheets which must be overlapped in shiplap manner.

1.8 If the distances are long and if there is not sufficient quantity of material to prepare the roadway, reuse the plywood sheets or the steel plates in the direction of the aircraft movement.

1.9 If the landing gears are used for moving the aircraft, prepare a roadway sufficient to support the complete width of the tires of each landing gear.

1.10 In the wet areas or bad weather, drainage pumps are necessary to remove water which stays on the ground and to give sufficient drainage for the site.

Make sure that all the materials used in the recovery operation are safe, can resist different weather conditions and loads imposed by the aircraft and the recovery equipment.

1.11 Make sure that all the materials used in the recovery operation are safe and resistant to weather conditions, aircraft weight, and recovery equipment weight.

1.12 If the ground is not level, prepare the roadway with a slope of 5 degrees or less. If possible, put the towing/winching vehicle on the runway to give maximum traction.

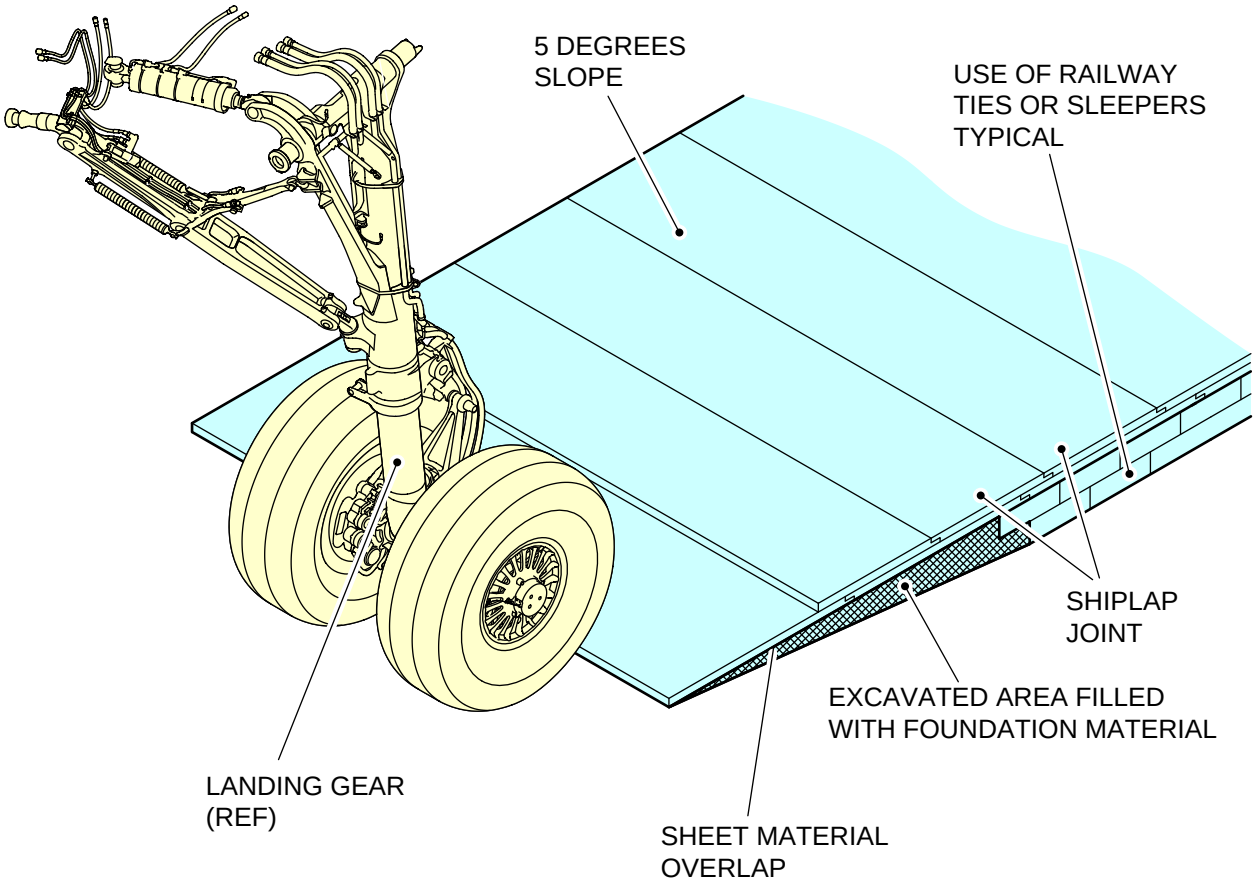

ROADWAY CONSTRUCTION
TYPICAL

ICN-BD500-A-J075000-C-3AB48-42857-A-001-01

Figure 1 Preparation of road way - (Sheet 1 of 3)

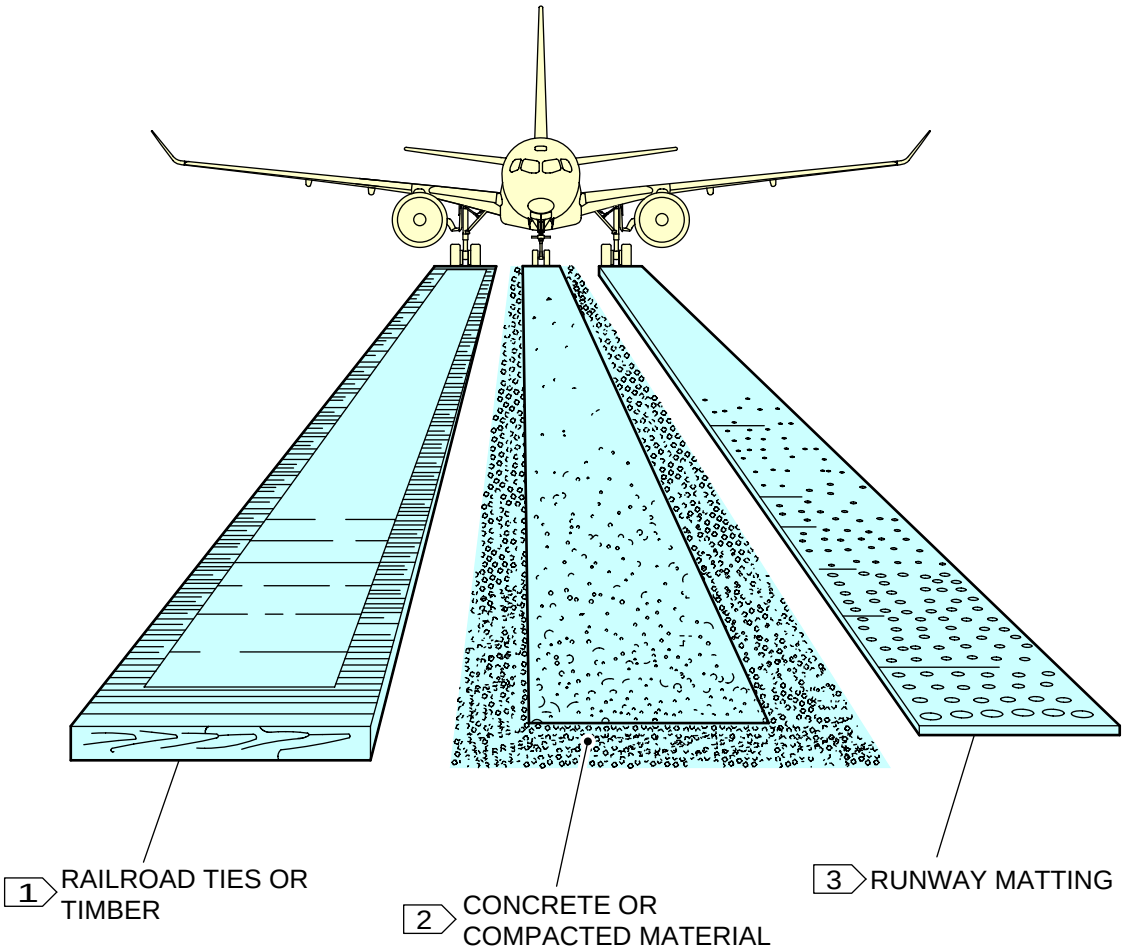

ROADWAY CONSTRUCTION TYPICAL

NOTES

1 Railroad ties or timber with steel plate or plywood sheets.
2 Concrete or compacted material with rock, gravel, etc.
3 Runway matting with steel plates, fiberglass aluminum, etc.

ICN-BD500-A-J075000-C-3AB48-42858-A-001-01

Figure 1 Preparation of road way - (Sheet 2 of 3)

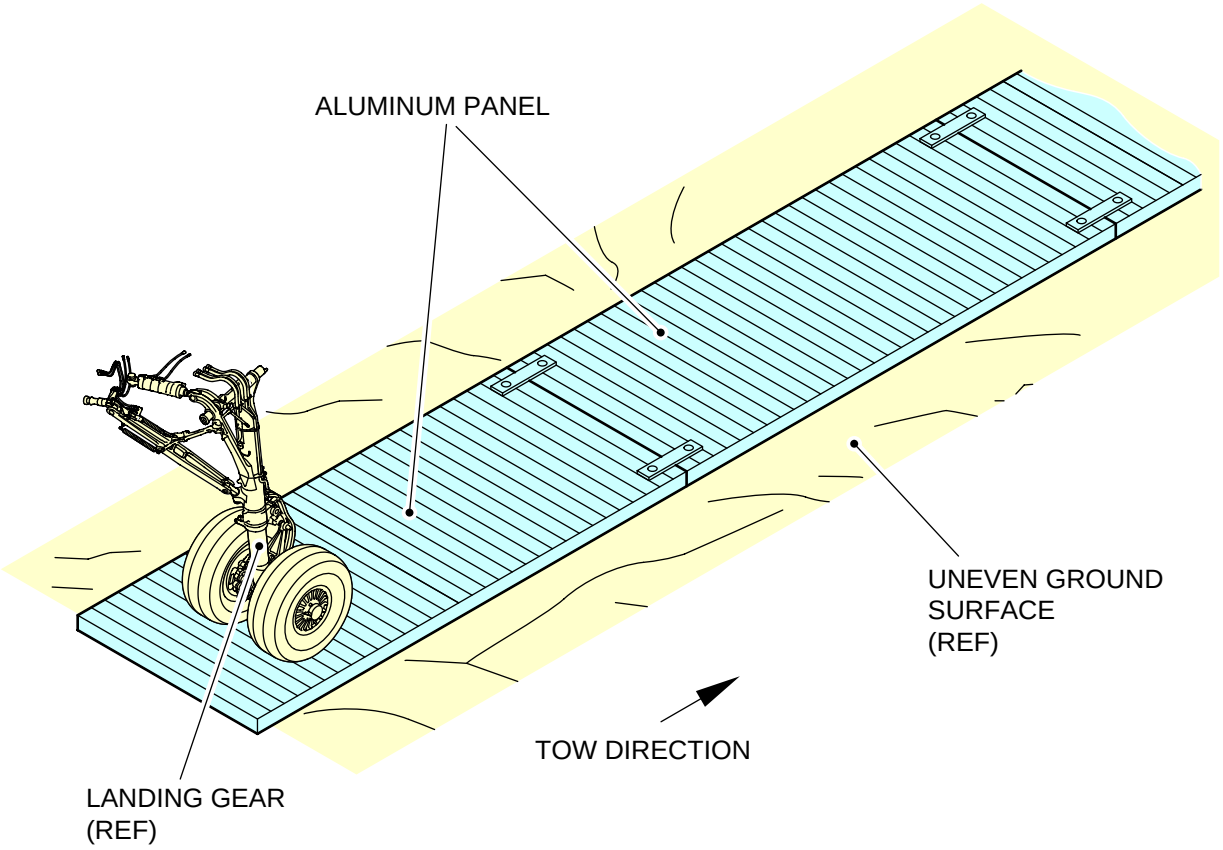

MANUFACTURED AND PREPARED SURFACE

ICN-BD500-A-J075000-C-3AB48-42859-A-001-01

Figure 1 Preparation of road way - (Sheet 3 of 3)

Requirements after job completion

Required conditions

Table 6 Required conditions

Action/Condition	Data Module/Technical publication
None	

Weight and centre of gravity management

Applicable to: All

Intentionally left blank

Weight and center of gravity management - General

Applicability: 50001-54999, 55001-59999

Table of contents

Page

Weight and center of gravity management - General..... 1
References..... 1
Description..... 1
1 Introduction..... 1
2 General..... 1
3 Definitions..... 1
4 Calculation of Recoverable Empty Weight (REW) and Net Recoverable Weight (NRW)..... 3

List of tables

Page

1 References..... 1

References

Table 1 References

Data Module/Technical Publication	Title
None	

Description

1 Introduction

This data module gives the data about how to manage the weight and center of gravity. Refer to Weight and Balance Manual (WBM).

This data module also gives the calculation procedure of Recoverable Empty Weight (REW) and Net Recoverable Weight (NRW).

2 General

Weight reduction of the aircraft is necessary before aircraft recovery. As weight is removed, the aircraft will be easier to lift and tow. The final weight of the aircraft will be significantly reduced when payload (such as passengers, luggage and cargo) and aircraft components (for example, damaged power plants, and fuel) are removed. If the data related specific aircraft is not available, then the generic values quoted in this document can be used. But, this will impact the accuracy of the results.

3 Definitions

- Center of Gravity (CG)
  - The CG is a point where the sum of all moments is equal to zero.
- Mean Aerodynamic Chord (MAC) or Reference Chord (RC)

- The MAC or RC is the distance from the Leading Edge (LE) to the Trailing Edge (TE) of a wing.

- Manufacturer's Empty Weight (MEW)
  - The MEW is the basic dry weight of a specific aircraft model that includes those fluids contained within closed systems. This can also be called as basic weight or empty weight.
- Maximum Ramp Weight (MRW)
  - The MRW is the maximum aircraft weight permitted for ground maneuvering as limited by aircraft structural strength. The ground maneuvering includes ground handling and taxi only.
- Maximum Take-Off Weight (MTOW)
  - The MTOW is the maximum aircraft weight permitted for take off operation as limited by aircraft structural strength and performance limitations.
- Maximum Landing Weight (MLW)
  - The MLW is the maximum aircraft weight permitted for landing as limited by aircraft structural strength and airworthiness requirements.
- Maximum Zero Fuel Weight (MZFW)
  - The MZFW is the maximum aircraft weight permitted before usable fuel and other consumables must be loaded in defined sections of the aircraft as limited by structural strength.
- Operating Empty Weight (OEW)
  - The OEW includes the MEW plus the weight of standard and operational items such as:
    - Unusable fuel
    - Engine oil
    - Seats
    - Crew and their baggage
    - Galley equipment
    - Consumables
    - Potable water
    - Waste tank pre-charge
    - Manuals
    - Etc.
- REW
  - The REW includes MEW plus the weight of various items of operational equipment that are an integral part of the aircraft.
- NRW

- The NRW includes REW plus adjustments which comprise of:
  - Subtraction of the crew weight and crew baggage
  - The effect of missing equipment and components
  - The effect of fuel and cargo on the aircraft
  - The effect of the position of the landing gear and flaps.

- Max Payload
  - The Max payload weight is the difference between the OEW and MZFW.

4 Calculation of Recoverable Empty Weight (REW) and Net Recoverable Weight (NRW)

1. After the flight crew, cabin attendants and passengers have vacated the aircraft, remove the galley supplies (for example, all OEW items), passenger baggage and cargo.
2. If possible, defuel the aircraft. Airbus strongly recommends that the aircraft to be defueled, if possible, before any recovery operation takes place. This will reduce the weight of the aircraft and help to prevent the damage to structure. When the defueling is completed, the aircraft fuel tanks will contain a certain amount of unrecoverable (trapped) fuel.
3. Determine the OEW and CG from the relevant section of the applicable WBM.
4. Determine the mass and CG of operational items removed or lost during the aircraft accident.
5. The result of sequences 3 and 4 is the REW.
6. Determine the mass and CG of those items removed or lost as part of the recovery procedures (for example, aircraft components, cabin equipment).
7. The result of sequences 5 and 6 is the NRW.

Intentionally left blank

Fuel data for ARP A220-100 - Technical data

Applicability: 50001-54999

Table of contents

Page

Fuel data for ARP A220-100 - Technical data..... 1
References..... 1
Description..... 1
1 General..... 1
2 Fuel tank capacities and weights..... 1
3 Weights and moments of the different fuel quantities..... 2

List of tables

Page

1 References..... 1
2 Fuel tank capacities and weights..... 2
3 Weights, centre of gravity, and moments for different fuel quantities in tanks..... 5

List of figures

Page

1 Tail tip longitudinal moment..... 3
2 Main landing gear collapse and no engine - lateral moment..... 4

References

Table 1 References

Data Module/Technical Publication	Title
None	

Description

1 General

This data module gives the fuel data for the A220-100 aircraft.

Note

The data presented in this DM is for planning purposes only and must be verified by applicable control documents, for example, Weight and Balance Manual (WBM). There can be instances where these control documents are not available, if so, the data contained in the Aircraft Recovery Publication (ARP) must be used to determine the best approximate data. For items not listed, contact Airbus.

2 Fuel tank capacities and weights

This section gives the left, center, and right fuel tank capacities and their corresponding weights.

Note

The data is for usable fuel only, the unusable fuel is part of the Operating Empty Weight (OEW).

Table 2 Fuel tank capacities and weights

Location	A220-100			
	Capacity		Weight[1]	
	(US gal)	(L)	(lb)	(kg)
LHS Main	1004	3800.55	6775	3073.09
RHS Main	1004	3800.55	6775	3073.09
Center	3748	14187.72	25300	11475.89
Total	5756	21788.83	38850	17622.06

1 Based on 6.75 lb/Us gal

3 Weights and moments of the different fuel quantities

This section gives the weights, Center of Gravity (CG), and moments produced due to different fuel quantities in the tanks. Refer to Table 3 .

The two major phenomenons occurs due to moments are tail tip longitudinal moment and lateral moment. The worst lateral moment occurs when one Main Landing Gear (MLG) collapse and no engine condition. Refer to Fig. 1 and Fig. 2 .

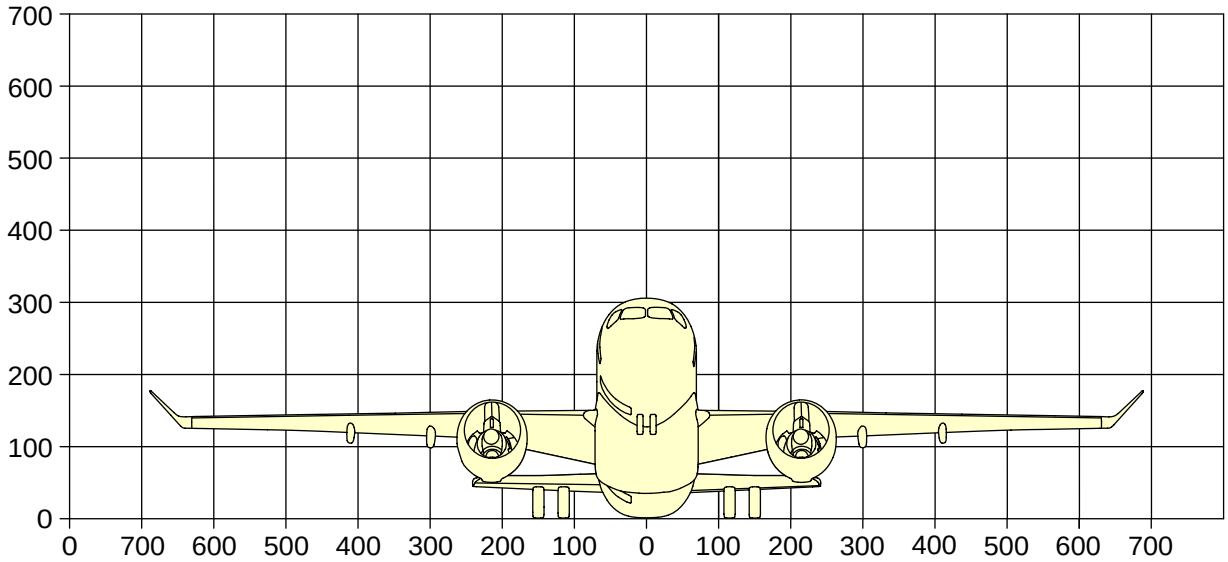

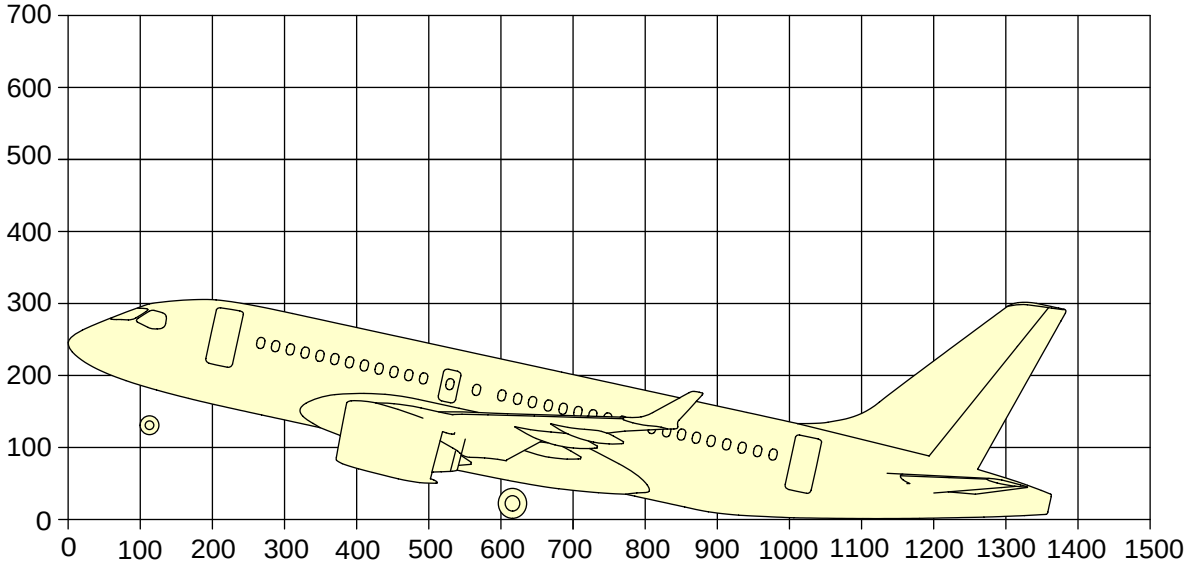

NOTE

1 square equals to 100 inches.

ICN-BD500-A-J071200-C-3AB48-30659-A-001-01

Figure 1 Tail tip longitudinal moment

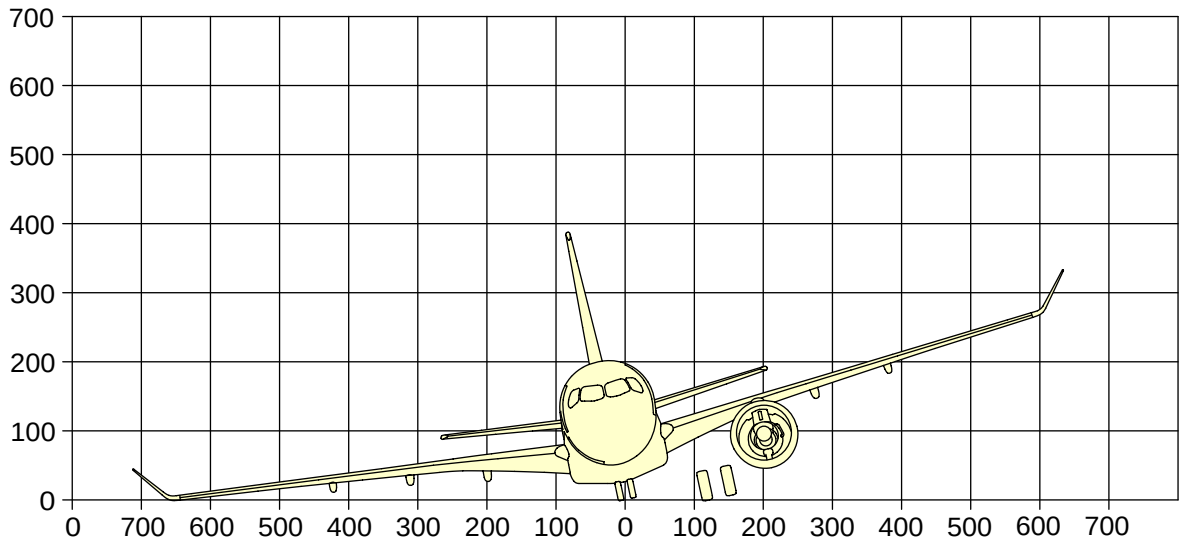

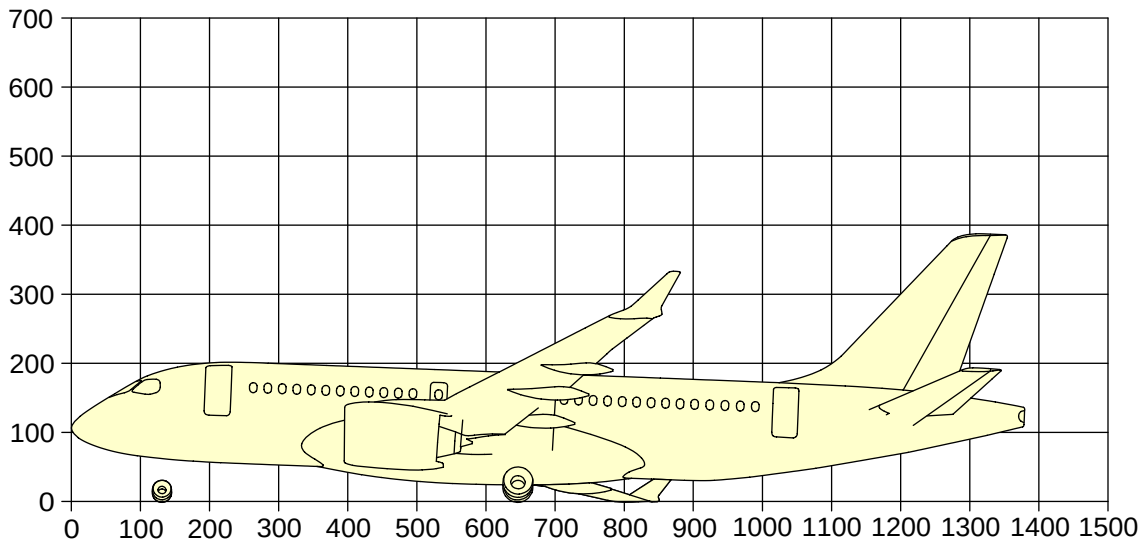

NOTE

1 square equals to 100 inches.

ICN-BD500-A-J071200-C-3AB48-30286-A-001-01

Figure 2 Main landing gear collapse and no engine - lateral moment

Table 3 Weights, centre of gravity, and moments for different fuel quantities in tanks

Tanks	Fuel Level %	Weight lb (kg)[1]	Xcg in. (m)	Ycg in. (m)	Zcg in. (m)	Tail lon-gitudinal Moment lb#in. (kg#m)	Lateral Moment lb#in. (kg#m)
RHS Main	25%	1694 (768.40)	850.2 (21.60)	169.4 (4.30)	139.9 (3.55)	37057 (426.90)	380452 (4382.81)
	50%	3388 (1536.80)	853.8 (21.69)	195.2 (4.96)	146.1 (3.71)	102663 (1182.68)	483402 (5568.79)
	75%	5081 (2304.74)	862.8 (21.92)	223 (5.66)	150.9 (3.83)	122645 (1412.87)	382184 (4402.76)
	100%	6775 (3073.14)	879.2 (22.33)	261.5 (6.64)	156.1 (3.96)	27791 (320.15)	64794 (746.43)
LHS Main	25%	1694 (768.40)	850.2 (21.60)	-169.4 (-4.30)	139.9 (3.55)	37057 (426.90)	11376 (131.05)
	50%	3388 (1536.80)	853.8 (21.69)	-195.2 (-4.96)	146.1 (3.71)	102663 (1182.68)	16203 (186.66)
	75%	5081 (2304.74)	862.8 (21.92)	-223 (-5.66)	150.9 (3.83)	122645 (1412.87)	8290 (95.50)
	100%	6775 (3073.14)	879.2 (22.33)	-261.5 (-6.64)	156.1 (3.96)	27291 (314.39)	1935 (22.29)
Center	25%	6325 (2869.02)	802.7 (20.39)	0.0 (0.00)	113.9 (2.89)	108428 (1249.09)	495462 (5707.72)
	50%	12650 (5738.04)	798.6 (20.28)	0.0 (0.00)	119.3 (3.03)	175880 (2026.14)	753360 (8678.71)
	75%	18975 (8607.06)	797.1 (20.25)	0.0 (0.00)	123.8 (3.14)	139764 (1610.08)	630569 (7264.15)
	100%	25300 (11476.08)	795.1 (20.20)	0.0 (0.00)	128.1 (3.25)	33994 (391.61)	107113 (1233.94)

1 Based on 6.75 lb/Us gal

Intentionally left blank

Fuel data for ARP A220-300 - Technical data

Applicability: 55001-59999

Table of contents

Page

Fuel data for ARP A220-300 - Technical data..... 1
References..... 1
Description..... 1
1 General..... 1
2 Fuel tank capacities and weights..... 1
3 Weights and moments of the different fuel quantities..... 2

List of tables

Page

1 References..... 1
2 Fuel tank capacities and weights..... 2
3 Weights, centre of gravity, and moments for different fuel quantities in tanks..... 5

List of figures

Page

1 Tail tip longitudinal moment..... 3
2 Main landing gear collapse and no engine - lateral moment..... 4

References

Table 1 References

Data Module/Technical Publication	Title
None	

Description

1 General

This data module gives the fuel data for the A220-300 aircraft.

Note

The data presented in this DM is for planning purposes only and must be verified by applicable control documents, for example, Weight and Balance Manual (WBM). There can be instances where these control documents are not available, if so, the data contained in the Aircraft Recovery Publication (ARP) must be used to determine the best approximate data. For items not listed, contact Airbus.

2 Fuel tank capacities and weights

This section gives the left, center, and right fuel tank capacities and their corresponding weights.

Note

The data is for usable fuel only, the unusable fuel is part of the Operating Empty Weight (OEW).

Table 2 Fuel tank capacities and weights

Location	A220-300			
	Capacity		Weight[1]	
	(US gal)	(L)	(lb)	(kg)
LHS Main	996	3770.27	6725	3050.41
RHS Main	996	3770.27	6725	3050.41
Center	3689	13964.38	24900	11294.45
Total	5681	21504.92	38350	17395.27

1 Based on 6.75 lb/Us gal

3 Weights and moments of the different fuel quantities

This section gives the weights, Center of Gravity (CG), and moments produced due to different fuel quantities in the tanks. Refer to Table 3 .

The two major phenomenons occurs due to moments are tail tip longitudinal moment and lateral moment. The worst lateral moment occurs when one Main Landing Gear (MLG) collapse and no engine condition. Refer to Fig. 1 and Fig. 2 .

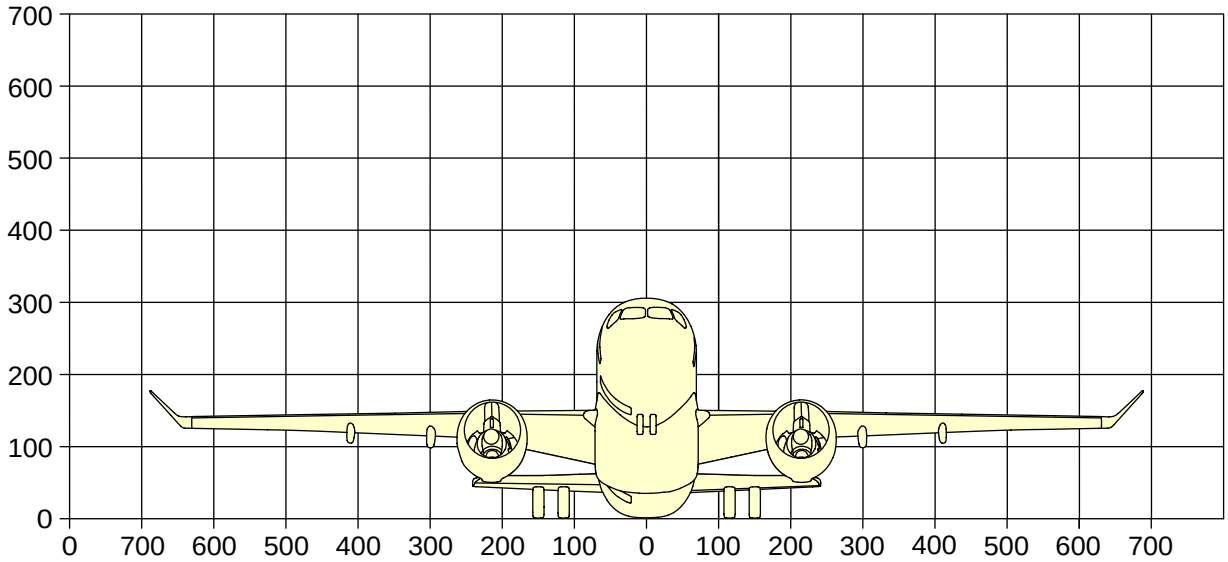

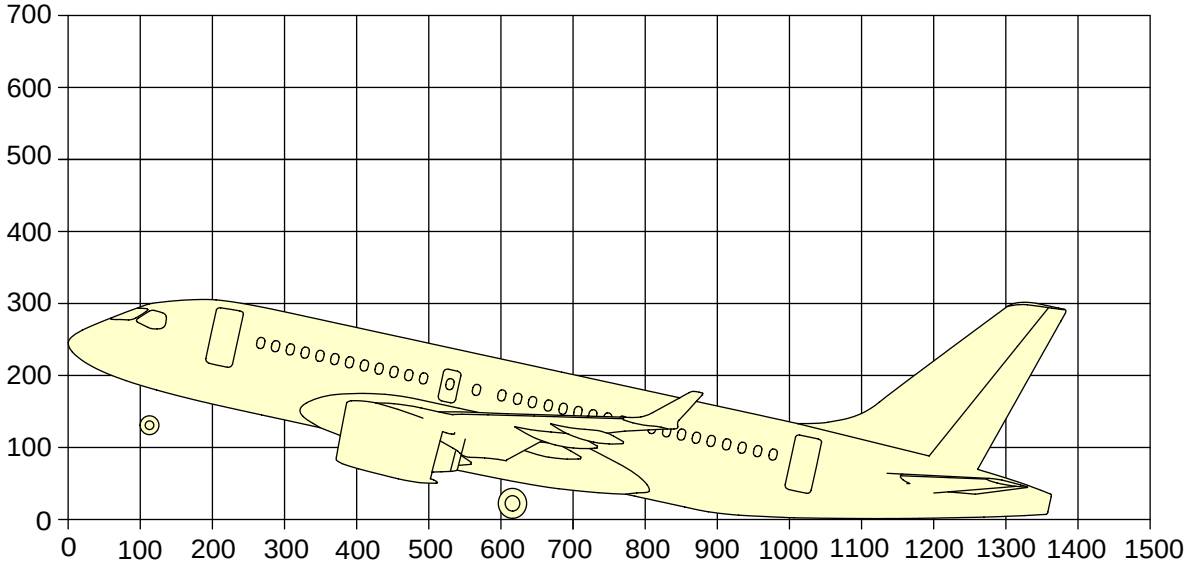

NOTE

1 square equals to 100 inches.

ICN-BD500-A-J071200-C-3AB48-30659-A-001-01

Figure 1 Tail tip longitudinal moment

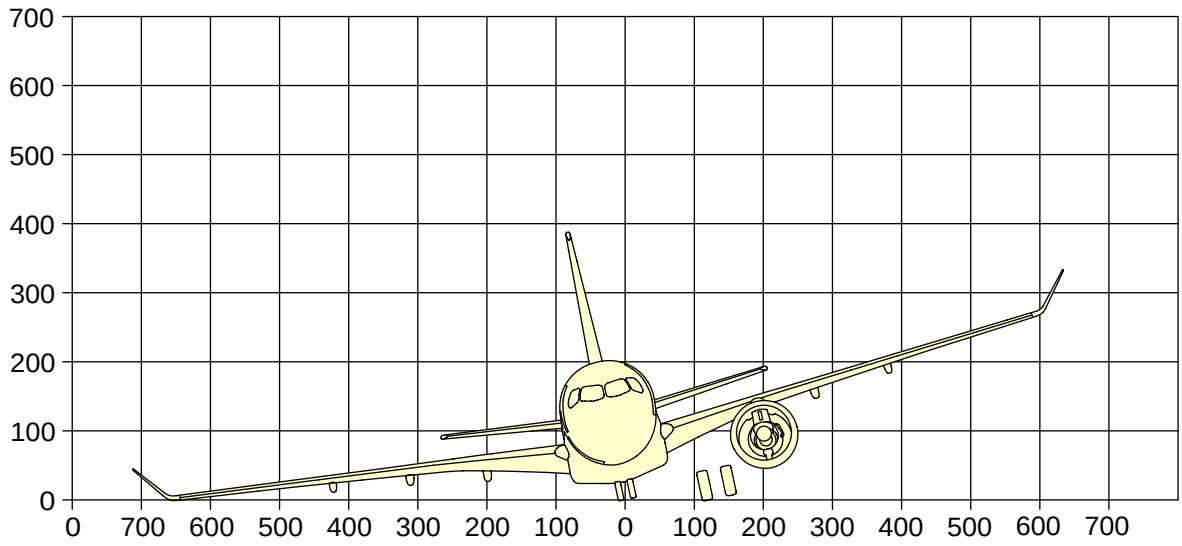

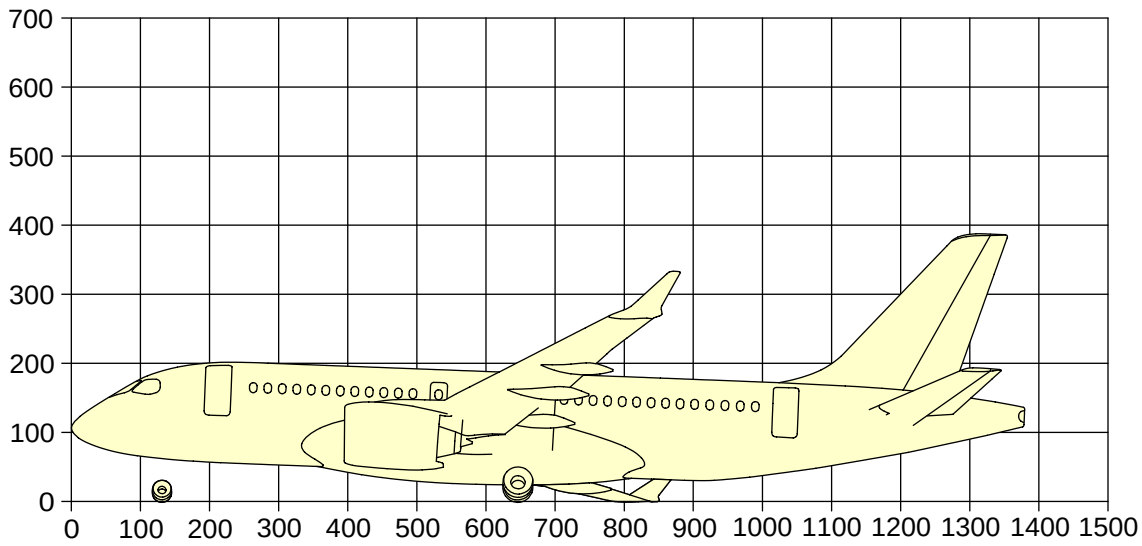

NOTE

1 square equals to 100 inches.

ICN-BD500-A-J071200-C-3AB48-30286-A-001-01

Figure 2 Main landing gear collapse and no engine - lateral moment

Table 3 Weights, centre of gravity, and moments for different fuel quantities in tanks

Tanks	Fuel Level %	Weight lb (kg)[1]	Xcg in. (m)	Ycg in. (m)	Zcg in. (m)	Tail lon-gitudinal Moment lb#in. (kg#m)	Lateral Moment lb#in. (kg#m)
RHS Main	25%	1694 (768.40)	850.2 (21.60)	169.4 (4.30)	139.9 (3.55)	37057 (426.90)	380452 (4382.81)
	50%	3388 (1536.80)	853.8 (21.69)	195.2 (4.96)	146.1 (3.71)	102663 (1182.68)	483402 (5568.79)
	75%	5081 (2304.74)	862.8 (21.92)	223 (5.66)	150.9 (3.83)	122645 (1412.87)	382184 (4402.76)
	100%	6775 (3073.14)	879.2 (22.33)	261.5 (6.64)	156.1 (3.96)	27791 (320.15)	64794 (746.43)
LHS Main	25%	1694 (768.40)	850.2 (21.60)	-169.4 (-4.30)	139.9 (3.55)	37057 (426.90)	11376 (131.05)
	50%	3388 (1536.80)	853.8 (21.69)	-195.2 (-4.96)	146.1 (3.71)	102663 (1182.68)	16203 (186.66)
	75%	5081 (2304.74)	862.8 (21.92)	-223 (-5.66)	150.9 (3.83)	122645 (1412.87)	8290 (95.50)
	100%	6775 (3073.14)	879.2 (22.33)	-261.5 (-6.64)	156.1 (3.96)	27291 (314.39)	1935 (22.29)
Center	25%	6325 (2869.02)	802.7 (20.39)	0.0 (0.00)	113.9 (2.89)	108428 (1249.09)	495462 (5707.72)
	50%	12650 (5738.04)	798.6 (20.28)	0.0 (0.00)	119.3 (3.03)	175880 (2026.14)	753360 (8678.71)
	75%	18975 (8607.06)	797.1 (20.25)	0.0 (0.00)	123.8 (3.14)	139764 (1610.08)	630569 (7264.15)
	100%	25300 (11476.08)	795.1 (20.20)	0.0 (0.00)	128.1 (3.25)	33994 (391.61)	107113 (1233.94)

1 Based on 6.75 lb/Us gal

Intentionally left blank

Managing aircraft weight - Diagram and lists

Applicability: 50001-54999, 55001-59999

Table of contents

Page

Managing aircraft weight - Diagram and lists..... 1
References..... 1
Description..... 1
1 General..... 1
2 Aircraft weight and the center of gravity..... 1
3 Weight reduction..... 2

List of tables

Page

1 References..... 1
2 Center of gravity terms..... 1

References

Table 1 References

Data Module/Technical Publication	Title
BD500-A-J12-10-28-00AAA-028A-A	Fuel system - Defueling - General

Description

1 General

This data module gives the information about managing and evaluating the center of gravity of the aircraft as well as information about weight reduction.

2 Aircraft weight and the center of gravity

It is necessary to calculate the weight of the aircraft center of gravity location in order to anticipate changes in the stability of the aircraft. Both weight and center of gravity location are used to calculate the expected. This information is to assist in the selection of the removal technique.

Table 2 Center of gravity terms

Term	Definition
Center of Gravity (CG)	The balance point of the aircraft. It is the imaginary point about witch the nose heavy and tail-heavy moments are exactly equal in magnitude.
Manufacturer's Empty Weight (MEW)	The basic dry weight of a specific aircraft model that includes those fluids contained within closed system.
Maximum Zero Fuel Weight (MZFW)	The maximum weight permitted before fuel is boarded.

Term	Definition
Mean Aerodynamic Chord (MAC) or Reference Chord (RC)	Distance from the leading edge to the trailing edge of a wing.
Recoverable Empty Weight (REW)	The MEW plus the weight of various items of operational equipment that are an integral part of the aircraft.
Net Recoverable Weight (NRW)	The REW including some adjustments which comprise of: - Subtraction of the crew weight and crew baggage - the effect of missing equipment and components - the effect of fuel and cargo on the aircraft - the effect of the position of the landing gear and flaps
Operating Empty Weight (OEW)	The MEW plus the weight of standard and operational items. Standard items include: - unusable fuel - engine oil - oxygen - fixed galley structure - miscellaneous equipment Operational items include: - crew and their baggage - removable galley and cabin service items - food and beverages - potable water - emergency equipment - waste tank pre-charge - cargo containers

3 Weight reduction

The change in the aircraft weight affects the CG, aircraft stability, and expected loads. It is critical to take the items that follow into consideration to avoid further damage to the aircraft or injury to persons in the environment of the aircraft:

- Safety devices should be used on the cargo door opening mechanism to prevent unwanted closure of the door.
- Movement of the payload during the removal of cargo, passengers, or aircraft components must be controlled to prevent tail tipping.
- The aircraft attitude and CG must be monitored during the removal of payload.

It is necessary to maintain the NRW at minimum, which can be achieved by the removal of the maximum weight.

Maximum weight reduction is achieved by defueling and payload removal.

For more information about defueling and the fuel system, refer to BD500-A-J12-10-28-00AAA-028A-A.

When weight reduction operations are performed, make sure that the expected result is achieved and the actions taken to reduce the weight have an efficient effect.

It is not always necessary to remove the cargo payload or fuel based on the factors that follow:

- CG is in limit
- Weight and amount of the cargo payload is within limit
- Need to excavate and build roadways for access
- Need to stabilize the ground so that cargo loaders and fuel trucks can go near the aircraft
- Defueling time is more than the time necessary to move the aircraft
- Capacity of the available lifting equipment
- Leveling/lifting loads are in limits
- Structural limitations on allowable leveling/lifting loads
- Non availability of storage capability of removed fuel.

Note

Fuel and cargo payload can also remain on the aircraft as ballast.

Intentionally left blank

Design weight limits A220-100 - Technical data

Applicability: 50001-54999

Table of contents

Page

Design weight limits A220-100 - Technical data..... 1
References..... 1
Description..... 1
1 General..... 1
2 Weight definitions..... 1
3 Design weights..... 3
4 Operating Empty Weight (OEW) items..... 3
5 Removable components weight data..... 4
6 Correction Moments..... 5

List of tables

Page

1 References..... 1
2 Design weights..... 3
3 Operating items weight and moment data..... 3
4 Removable components weight and moment data..... 4
5 landing gears weight and moment data..... 5

References

Table 1 References

Data Module/Technical Publication	Title
None	

Description

1 General

- This data module gives the design weight limits for the Airbus A220-100 aircraft.

Note

The data presented in this DM is for planning purposes only and must be verified by applicable control documents, for example, Weight and Balance Manual (WBM). There can be instances where these control documents are not available, if so, the data contained in the Aircraft Recovery Publication (ARP) must be used to determine the best approximate data. For items not listed, contact Airbus.

2 Weight definitions

- Refer to Table 2 , Table 3 , and Table 4 for design weight data.
  - Manufacturer's Empty Weight (MEW)

- The MEW is the basic dry weight of a specific aircraft model that includes those fluids contained within closed systems. This can also be called as basic weight or empty weight.

- Maximum Ramp Weight (MRW)
  - The MRW is the maximum aircraft weight permitted for ground maneuvering as limited by aircraft structural strength. The ground maneuvering includes ground handling and taxi only.
- Maximum Take-Off Weight (MTOW)
  - The MTOW is the maximum aircraft weight permitted for take off operation as limited by aircraft structural strength and performance limitations.
- Maximum Landing Weight (MLW)
  - The MLW is the maximum aircraft weight permitted for landing as limited by aircraft structural strength and performance limitations.
- Maximum Zero Fuel Weight (MZFW)
  - The MZFW is the maximum aircraft weight before usable fuel and other consumables must be loaded in defined sections of the aircraft as limited by structural strength.
- Operating Empty Weight (OEW)
  - The OEW includes the MEW plus the weight of standard and operational items such as:
    - Unusable fuel
    - Engine oil
    - Seats
    - Crew and their baggage
    - Galley equipment
    - Consumables
    - Potable water
    - Waste tank pre-charge
    - Manuals
    - Etc.
- Recoverable Empty Weight (REW)
  - The Recoverable Empty Weight (REW) includes MEW plus the weight of various items of operational equipment that are an integral part of the aircraft.
- Net Recoverable Weight (NRW)
  - The NRW includes REW plus adjustments which comprise of:
    - Subtraction of the crew weight and crew baggage
    - The effect of missing equipment and components

- The effect of fuel and cargo on the aircraft
- The effect of the position of the landing gear and flaps.

- Max Payload
  - The Max payload weight is the difference between the OEW and MZFW.

3 Design weights

This section gives the maximum design weights.

The OEW is used as the reference point for determining the NRW. Where possible the actual OEW shall be used, this will be obtained from the applicable weight and balance manual, load-sheet or fleet value, otherwise the data inTable 2 can be used.

Table 2 Design weights

Description	Weight	
	(lb)	(kg)
MRW	135,000	61,235
MTOW	134,000	60,781
MLW	115,500	52,390
MZFW	111,000	50,349
OEW	78,050	35,403
Max Payload	32,950	17,622

4 Operating Empty Weight (OEW) items

This section gives the weights and the moments for major operating items. These values can be used in absence of specific aircraft data.

Table 3 Operating items weight and moment data

Operating Items	A220-100		
	Weight lb (kg)	Fuselage Station (FS) in. (m)	Moment about FS lb#in. (kg#m)
Pilot / Copilot	190 (86.18)	355 (9.02)	67450 (777.02)
3rd crew member	190 (86.18)	395 (10.03)	75050 (864.58)
Fwd flight attendants (A1, A2)	170 (77.11)	446 (11.33)	75820 (873.45)
Aft flight attendant (A3) on galley G4	170 (77.11)	1270 (32.26)	215900 (2487.17)
Aft flight attendant (A4)	170 (77.11)	1270 (32.26)	215900 (2487.17)

Operating Items	A220-100		
Aft flight attendant (A5)	170 (77.11)	1298 (32.97)	220660 (2542.00)
Crew bags (10 lb / crew)	60 (27.22)	398 (10.11)	23880 (275.10)
Flight manual	40 (18.14)	398 (10.11)	15920 (183.40)
Galley zone 1 inserts & consumables fwd of the fwd service door	300 (136.08)	414 (10.52)	124200 (1430.78)
Galley zone 3 inserts & consumables aft of the fwd service door	400 (181.44)	471 (11.96)	188400 (2170.37)
Galley zone 7 inserts & consumables aft of the aft service door	900 (408.24)	1317 (33.45)	1185300 (13654.66)
Potable water (full)	345 (156.49)	1313.9 (33.37)	453296 (5221.97)
Pre-charge fluids for Toilets / Tanks	16.8 (7.62)	1308.2 (33.23)	21978 (253.19)

5 Removable components weight data

This section gives the weights and moments data for various removable components. This data will be used in absence of specific aircraft data.

Table 4 Removable components weight and moment data

Component	A220-100				
	Weight lb (kg)	FS in. (m)	Moment about FS lb#in. (kg#m)	Buttock Line (BL) in. (m)[1]	Moment about BL lb#in. (kg#m)
Main Landing Gear (MLG) down assembly (including tires and brakes) (each)	1960 (889.06)	896.1 (22.76)	1756356 (20233.22)	-130.1 (-3.30)	-254901 (-2936.46)
Nose Landing Gear (NLG) down Assembly (including tires)	680 (308.45)	384.1 (9.76)	261188 (3008.89)	-1.4 (-0.04)	-985 (-11.35)
Engine & nacelle assembly (each)	7100 (3220.56)	740.1 (18.80)	5254710 (60534.26)	-214.6 (-5.45)	-1523660 (-17552.56)
Pylon assembly (each)	1300 (589.68)	786.8 (19.98)	1022840 (11783.12)	-215 (-5.46)	-279518 (-3220.05)

Slat No. 1	72 (32.66)	754 (19.15)	54288 (625.40)	-133.4 (-3.39)	-9608 (-110.68)
Slat No. 2	82 (37.20)	850 (21.59)	69700 (802.94)	-304.5 (-7.73)	-24966 (-287.61)
Slat No. 3	70 (31.75)	931.1 (23.65)	65177 (750.84)	-450.5 (-11.44)	-31535 (-363.28)
Slat No. 4	53 (24.04)	999.4 (25.38)	52968 (610.19)	-572.6 (-14.54)	-30349 (-349.62)
Inboard flap	215 (97.52)	927.9 (23.57)	199499 (2298.23)	-142.5 (-3.62)	-30637 (-352.94)
Outboard flap	233 (105.69)	972.3 (24.70)	226546 (2609.81)	-356.4 (-9.05)	-83044 (-956.67)

1 Left is shown

6 Correction Moments

This section gives the weight and moment data for landing gears.

Table 5 landing gears weight and moment data

Components	A220-100		
	Weight lb (kg)	**X lb#in. (kg#m)**	**Y lb#in. (kg#m)**
NLG	680 (308.44)	-16712 (-192.52)	15 (0.17)
Left MLG	1960 (889.04)	-27541 (-317.27)	-135056 (-1555.85)
Right MLG	1960 (889.04)	-27541 (-317.27)	135056 (1555.85)

Intentionally left blank

Design weight limits A220-300 - Technical data

Applicability: 55001-59999

Table of contents

Page

Design weight limits A220-300 - Technical data..... 1
References..... 1
Description..... 1
1 General..... 1
2 Weight definitions..... 1
3 Design weights..... 3
4 Operating Empty Weight (OEW) items..... 3
5 Removable components weight data..... 4
6 Correction Moments..... 5

List of tables

Page

1 References..... 1
2 Design weights..... 3
3 Operating items weight and moment data..... 3
4 Removable components weight and moment data..... 4
5 landing gears weight and moment data..... 5

References

Table 1 References

Data Module/Technical Publication	Title
None	

Description

1 General

- This data module gives the design weight limits for the Airbus A220-300 aircraft.

Note

The data presented in this DM is for planning purposes only and must be verified by applicable control documents, for example, Weight and Balance Manual (WBM). There can be instances where these control documents are not available, if so, the data contained in the Aircraft Recovery Publication (ARP) must be used to determine the best approximate data. For items not listed, contact Airbus.

2 Weight definitions

- Refer to Table 2, Table 3 , and Table 4 for design weight data.
    - Manufacturer's Empty Weight (MEW)

- The MEW is the basic dry weight of a specific aircraft model that includes those fluids contained within closed systems. This can also be called as basic weight or empty weight.

- Maximum Ramp Weight (MRW)
  - The MRW is the maximum aircraft weight permitted for ground maneuvering as limited by aircraft structural strength. The ground maneuvering includes ground handling and taxi only.
- Maximum Take-Off Weight (MTOW)
  - The MTOW is the maximum aircraft weight permitted for take off operation as limited by aircraft structural strength and performance limitations.
- Maximum Landing Weight (MLW)
  - The MLW is the maximum aircraft weight permitted for landing as limited by aircraft structural strength and performance limitations.
- Maximum Zero Fuel Weight (MZFW)
  - The MZFW is the maximum aircraft weight before usable fuel and other consumables must be loaded in defined sections of the aircraft as limited by structural strength.
- Operating Empty Weight (OEW)
  - The OEW includes the MEW plus the weight of standard and operational items such as:
    - Unusable fuel
    - Engine oil
    - Seats
    - Crew and their baggage
    - Galley equipment
    - Consumables
    - Potable water
    - Waste tank pre-charge
    - Manuals
    - Etc.
- Recoverable Empty Weight (REW)
  - The Recoverable Empty Weight (REW) includes MEW plus the weight of various items of operational equipment that are an integral part of the aircraft.
- Net Recoverable Weight (NRW)
  - The NRW includes REW plus adjustments which comprise of:
    - Subtraction of the crew weight and crew baggage
    - The effect of missing equipment and components

- The effect of fuel and cargo on the aircraft
- The effect of the position of the landing gear and flaps.

- Max Payload
  - The Max payload weight is the difference between the OEW and MZFW.

3 Design weights

This section gives the maximum design weights.

The OEW is used as the reference point for determining the NRW. Where possible the actual OEW shall be used, this will be obtained from the applicable weight and balance manual, load-sheet or fleet value, otherwise the data inTable 2 can be used.

Table 2 Design weights

Description	Weight	
	(lb)	(kg)
MRW	150,000	68,039
MTOW	149,000	67,585
MLW	129,500	58,740
MZFW	123,000	55,792
OEW	81,900	37,149
Max Payload	41,100	18,643

4 Operating Empty Weight (OEW) items

This section gives the weights and the moments for major operating items. These values can be used in absence of specific aircraft data.

Table 3 Operating items weight and moment data

Operating Items	A220-300		
	Weight lb (kg)	Fuselage Station (FS) in. (m)	Moment about FS lb#in. (kg#m)
Pilot / Copilot	190 (86.18)	271.0 (6.88)	51490 (593.16)
3rd crew member	190 (86.18)	311.0 (7.90)	59090 (680.72)
Fwd flight attendants (A1, A2)	170 (77.11)	362.0 (9.19)	61540 (708.94)
Aft flight attendant (A3) on galley G4	170 (77.11)	1333.0 (33.86)	226610 (2610.55)
Aft flight attendant (A4)	170 (77.11)	1333.0 (33.86)	226610 (2610.55)

Operating Items	A220-300		
Aft flight attendant (A5)	170 (77.11)	1361.0 (34.57)	231370 (2665.38)
Crew bags (10 lb / crew)	60 (27.22)	314.0 (7.98)	18840 (217.04)
Flight manual	40 (18.14)	314.0 (7.98)	12560 (144.69)
Galley zone 1 inserts & consumables fwd of the fwd service door	300 (136.08)	330.0 (8.38)	99000 (1140.48)
Galley zone 3 inserts & consumables aft of the fwd service door	400 (181.44)	387.0 (9.83)	154800 (1783.30)
Galley zone 7 inserts & consumables aft of the aft service door	900 (408.24)	1380.0 (35.05)	1242000 (14307.84)
Potable water (full)	345 (156.49)	1376.9 (34.97)	475031 (5472.36)
Pre-charge fluids for toilets / tanks	16.8 (7.62)	1371.2 (34.83)	23036 (265.37)

5 Removable components weight data

This section gives the weights and moments data for various removable components. This data will be used in absence of specific aircraft data.

Table 4 Removable components weight and moment data

Component	A220-300				
	Weight lb (kg)	FS in. (m)	Moment about FS lb#in. (kg#m)	Buttock Line (BL) in. (m) [1]	Moment about BL lb#in. (kg#m)
Main Landing Gear (MLG) down assembly (including tires and brakes) (each)	2065 (936.68)	896.2 (22.76)	1850653 (21319.52)	-129.8 (-3.30)	-268028 (-3087.68)
Nose Landing Gear (NLG) down Assembly (including tires)	680 (308.45)	300.1 (7.62)	204068 (2350.86)	-1.4 (-0.04)	-960 (-11.06)
Engine & nacelle assembly (each)	7100 (3220.56)	740.1 (18.80)	5254710 (60534.26)	-214.6 (-5.45)	-1523660 (-17552.56)
Pylon assembly (each)	1 (589.68)	786.8 (19.98	1022840 (11783.12)	-215.0 (-5.46)	-279518 (-3220.05)

Slat No. 1	72 (32.66)	754.0 (19.15)	54288 (625.40)	-133.4 (-3.39)	-9608 (-110.68)
Slat No. 2	82 (37.20)	850.0 (21.59)	69700 (802.94)	-304.5 (-7.73)	-24966 (-287.61)
Slat No. 3	70 (31.75)	931.1 (23.65)	65177 (750.84)	-450.5 (-11.44)	-31535 (-363.28)
Slat No. 4	53 (24.04)	999.4 (25.38)	52968 (610.19)	-572.6 (-14.54)	-30349 (-349.62)
Inboard flap	215 (97.52)	927.9 (23.57)	199499 (2298.22)	-142.5 (-3.62)	-30637 (-352.94)
Outboard flap	233 (105.69)	972.3 (24.70)	226546 (2609.81)	-356.4 (-9.05)	-83044 (-956.67)

1 Left is shown

6 Correction Moments

This section gives the weight and moment data for landing gears.

Table 5 landing gears weight and moment data

Components	A220-300		
	Weight lb (kg)	**X lb#in. (kg#m)**	**Y lb#in. (kg#m)**
NLG	680 (308.44)	-16726 (-192.68)	12 (0.14)
Left MLG	2065 (936.67)	-28791 (-331.67)	-143055 (-1647.99)
Right MLG	2065 (936.67)	-28877 (332.66)	140940 (1623.63)

Intentionally left blank

Center of gravity limits A220-100 - Technical data

Applicability: 50001-54999

Table of contents

Page

Center of gravity limits A220-100 - Technical data..... 1
References..... 1
Description..... 1
1 General..... 1
2 Definitions..... 1
3 Equation of Center of Gravity (CG) in terms of % of Mean Aerodynamic Chord (MAC) and inches..... 2
4 Center of Gravity (CG) envelope - Design weights..... 5

List of tables

Page

1 References..... 1
2 FS to % MAC..... 3
3 A220-100 envelope limits..... 7

List of figures

Page

1 A220-100 - Center of gravity limits..... 6

References

Table 1 References

Data Module/Technical Publication	Title
None	

Description

1 General

- This data module gives the Center of Gravity (CG) limits of the Airbus A220-100 aircraft.

Note

The data presented is for planning purposes and must be verified by reference to applicable control documents, for example, Weight and Balance Manual (WBM). There can be instances where these documents are not available, if so, the data contained in the Aircraft Recovery Publication (ARP) must be used to determine the best approximate data. For items not listed, contact Airbus.

2 Definitions

- CG

- The CG is a point where the sum of all moments is equal to zero.

- Fuselage Station (FS)
  - The FSs are used to indicate the locations along the X datum line. The FSs are measured in inches (in.) and are perpendicular to the fuselage center line. The values are +ve aft of FS0.
- Water Line (WL)
  - The WLs are used to indicate the locations along the Z datum line. The WLs are measured in inches and are horizontal lines perpendicular to the Buttock Line (BL) and parallel to the fuselage center line. The values are +ve above Z datum line 0 and are -ve to below Z datum line.
- Buttock Line (BL)
  - The BL are used to indicate the locations along the Y datum line. The BLs are measured in inches. The BLs are vertical lines perpendicular to the WL and fuselage center line. The BLs are parallel to the fuselage vertical center line. The values are +ve to the right of aircraft centerline and -ve to left of aircraft centerline.
- Mean Aerodynamic Chord (MAC) or Reference Chord (RC)
  - The MAC or RC is the distance from the Leading Edge (LE) to the Trailing Edge (TE) of a wing.

3 Equation of Center of Gravity (CG) in terms of % of Mean Aerodynamic Chord (MAC) and inches

- This section gives the equation of CG and its definition.
  - Aircraft CG (% MAC) = ((Aircraft CG - LEMAC) / MAC) * 100
  - Aircraft CG (in.) = ((Aircraft CG (% MAC) / 100) * MAC) + LEMAC

where

Aircraft CG = Aircraft CG measured from fuselage datum 0.

Leading Edge Mean Aerodynamic Chord (LEMAC) = Distance from fuselage datum 0 to the LE of the MAC.

MAC = Mean aerodynamic chord for the aircraft.

LEMAC = 818.998

MAC = 148.86

Example:

Aircraft CG = 859.6 in as determined by Net Recoverable Weight (NRW) calculation.

LEMAC = 818.998

MAC = 148.86

Aircraft CG (% MAC) = ((859.6 - 818.998) / 148.86) * 100

Aircraft CG (% MAC) = 27.28 %

Conversely, the CG (in.) can be determined as follows:

Aircraft CG (in.) = ((Aircraft CG (% MAC) / 100) * MAC) + LEMAC

Example:

Aircraft CG (in.) = ((27.28 / 100) * 148.86) + 818.998 = 859.6 in.

Aircraft CG (in.) = 859.6 in.

Table 2 FS to % MAC

FS in. (m)	0.0	0.1	0.2	0.3	0.4	0.5	0.6	0.7	0.8	0.9
835 (21.21)	10.7	10.8	10.9	10.9	11.0	11.1	11.2	11.2	11.3	11.4
836 (21.23)	11.4	11.5	11.6	11.6	11.7	11.8	11.8	11.9	12.0	12.0
837 (21.26)	12.1	12.2	12.2	12.3	12.4	12.4	12.5	12.6	12.6	12.7
838 (21.29)	12.8	12.8	12.9	13.0	13.0	13.1	13.2	13.2	13.3	13.4
839 (21.31)	13.4	13.5	13.6	13.6	13.7	13.8	13.8	13.9	14.0	14.0
840 (21.34)	14.1	14.2	14.2	14.3	14.4	14.4	14.5	14.6	14.6	14.7
841 (21.36)	14.8	14.8	14.9	15.0	15.0	15.1	15.2	15.2	15.3	15.4
842 (21.39)	15.5	15.5	15.6	15.7	15.7	15.8	15.9	15.9	16.0	16.1
843 (21.41)	16.1	16.2	16.3	16.3	16.4	16.5	16.5	16.6	16.7	16.7
844 (21.44)	16.8	16.9	16.9	17.0	17.1	17.1	17.2	17.3	17.3	17.4
845 (21.46)	17.5	17.5	17.6	17.7	17.7	17.8	17.9	17.9	18.0	18.1
846 (21.49)	18.1	18.2	18.3	18.3	18.4	18.5	18.5	18.6	18.7	18.7
847 (21.51)	18.8	18.9	18.9	19.0	19.1	19.1	19.2	19.3	19.3	19.4
848 (21.54)	19.5	19.5	19.6	19.7	19.8	19.8	19.9	20.0	20.0	20.1
849 (21.56)	20.2	20.2	20.3	20.4	20.4	20.5	20.6	20.6	20.7	20.8

FS in. (m)	0.0	0.1	0.2	0.3	0.4	0.5	0.6	0.7	0.8	0.9
850 (21.59)	20.8	20.9	21.0	21.0	21.1	21.2	21.2	21.3	21.4	21.4
851 (21.62)	21.5	21.5	21.5	21.7	21.8	21.8	21.9	22.0	22.0	22.1
852 (21.64)	22.2	22.2	22.3	22.4	22.4	22.5	22.6	22.6	22.7	22.8
853 (21.67)	22.8	22.9	23.0	23.0	23.1	23.2	23.2	23.3	23.4	23.4
854 (21.69)	23.5	23.6	23.6	23.7	23.8	23.8	23.9	24.0	24.0	24.1
855 (21.72)	24.2	24.3	24.3	24.4	24.5	24.5	24.6	24.7	24.7	24.8
856 (21.74)	24.9	24.9	25.0	25.1	25.1	25.2	25.3	25.3	25.4	25.5
857 (21.77)	25.5	25.6	25.7	25.7	25.8	25.9	25.9	26.0	26.1	26.1
858 (21.79)	26.2	26.3	26.3	26.4	26.5	26.5	26.6	26.7	26.7	26.8
859 (21.82)	26.9	26.9	27.0	27.1	27.1	27.2	27.3	27.3	27.4	27.5
860 (21.84)	27.5	27.6	27.7	27.7	27.8	27.9	27.9	28.0	28.1	28.1
861 (21.87)	28.2	28.3	28.3	28.4	28.5	28.6	28.6	28.7	28.8	28.8
862 (21.89)	28.9	29.0	29.0	29.1	29.2	29.2	29.3	29.4	29.4	29.5
863 (21.92)	29.6	29.6	29.7	29.8	29.8	29.9	30.0	30.0	30.1	30.2
864 (21.95)	30.2	30.3	30.4	30.4	30.5	30.6	30.6	30.7	30.8	30.8
865 (21.97)	30.9	31.0	31.0	31.1	31.2	31.2	31.3	31.4	31.4	31.5
866 (22.00)	31.6	31.6	31.7	31.8	31.8	31.9	32.0	32.0	32.1	32.2
867 (22.02)	32.2	32.3	32.4	32.4	32.5	32.6	32.6	32.7	32.8	32.9

FS in. (m)	0.0	0.1	0.2	0.3	0.4	0.5	0.6	0.7	0.8	0.9
868 (22.05)	32.9	33.0	33.1	33.1	33.2	33.3	33.3	33.4	33.5	33.5
869 (22.07)	33.6	33.7	33.7	33.8	33.9	33.9	34.0	34.1	34.1	34.2
870 (22.10)	34.3	34.3	34.4	34.5	34.5	34.6	34.7	34.7	34.8	34.9
871 (22.12)	34.9	35.0	35.1	35.1	35.2	35.3	35.3	35.4	35.5	35.5
872 (22.15)	35.6	35.7	35.7	35.8	35.9	35.9	36.0	36.1	36.1	36.2
873 (22.17)	36.3	36.3	36.4	36.5	36.5	36.6	36.7	36.7	36.8	36.9
874 (22.20)	36.9	37.0	37.1	37.1	37.2	37.3	37.4	37.4	37.5	37.6
875 (22.23)	37.6	37.7	37.8	37.8	37.9	38.0	38.0	38.1	38.2	38.2
876 (22.25)	38.3	38.4	38.4	38.5	38.6	38.6	38.7	38.8	38.8	38.9
877 (22.28)	39.0	39.0	39.1	39.2	39.2	39.3	39.4	39.4	39.5	39.6
878 (22.30)	39.6	39.7	39.8	39.8	39.9	40.0	40.0	40.1	40.2	40.2
879 (22.33)	40.3	40.4	40.4	40.5	40.6	40.6	40.7	40.8	40.8	40.9
880 (22.35)	41.0	41.0	41.1	41.2	41.2	41.3	41.4	41.4	41.5	41.6

Example: FS 850.4 in. = 21.1 % MAC

4 Center of Gravity (CG) envelope - Design weights

- The envelope gives the weight and CG variations and limits for Maximum Ramp Weight (MRW), Maximum Take-Off Weight (MTOW), Maximum Landing Weight (MLW), Maximum Zero Fuel Weight (MZFW), and Minimum Flight Weight (MFW).
- To use the CG envelope Fig. 1 , refer to Table 3 .

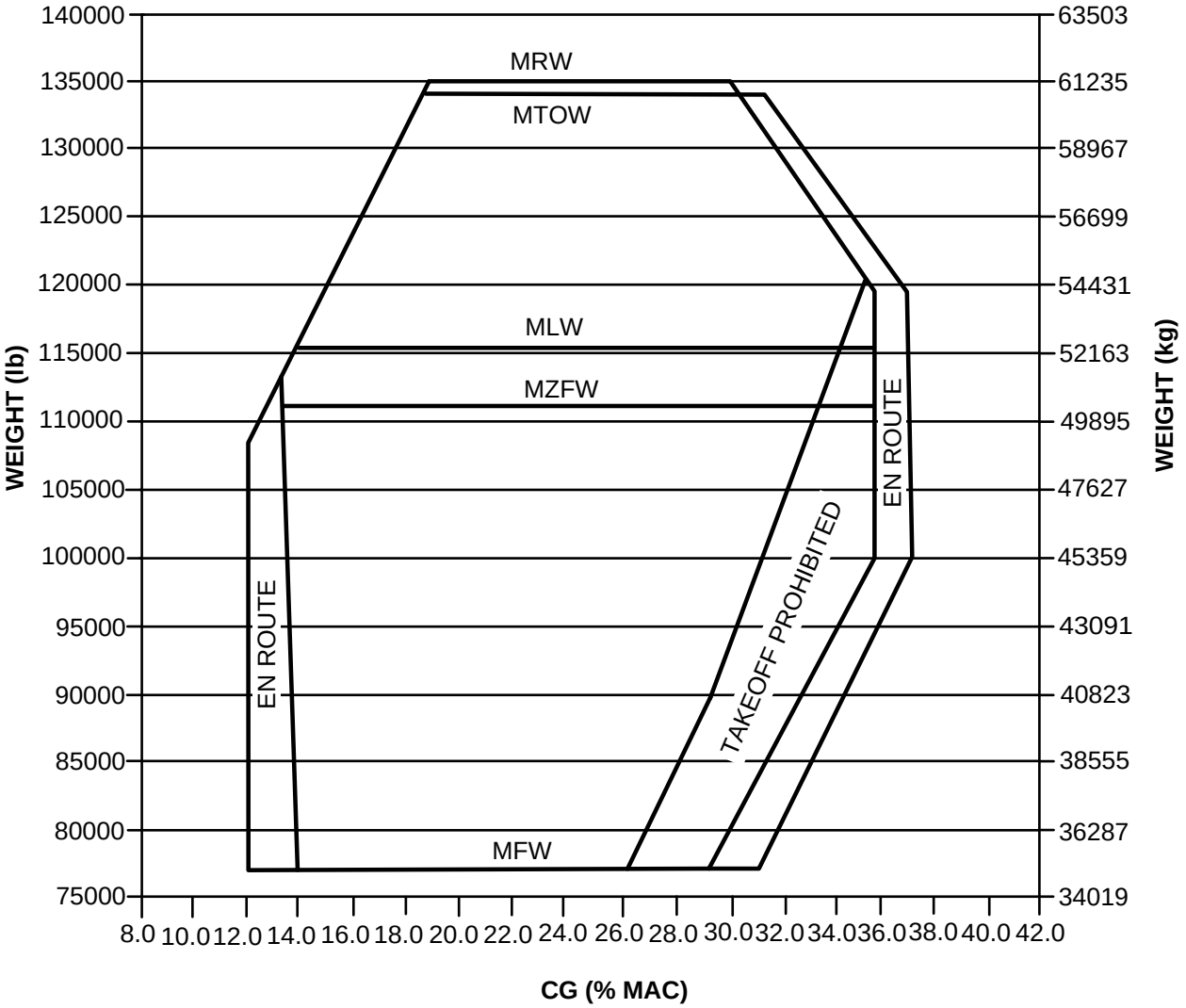

CENTER OF GRAVITY LIMITS

ICN-BD500-A-J084103-C-3AB48-58007-A-001-01

Figure 1 A220-100 - Center of gravity limits

Table 3 A220-100 envelope limits

Weight lb (kg)	Fwd Limits		Aft Limits	
	Flight %	Ground %	Flight %	Ground %
77000 (34927)	12.0	13.9	31.3	29.4
80000 (36287)	12.0	13.9	32.1	30.2
85000 (38555)	12.0	13.8	33.4	31.6
90000 (40823)	12.0	13.7	34.7	33.0
95000 (43091)	12.0	13.6	35.9	34.4
100000 (45359)	12.0	13.5	37.2	35.8
105000 (47627)	12.0	13.4	37.2	35.8
108500 (49215)	12.0	13.4	37.1	35.8
110000 (49895)	12.4	13.3	37.1	35.8
113425 (51449)	13.3	13.3	37.1	35.8
115000 (52163)	13.7	13.7	37.1	35.8
119500 (54204)	14.8	14.8	37.0	35.8
120000 (54431)	15.0	15.0	36.8	35.6
125000 (56699)	16.3	16.3	35.0	33.8
130000 (58967)	17.5	17.5	33.1	32.0
134000 (60781)	18.6	18.6	31.6	30.6
135000 (61235)	18.8	18.8	N/A	30.2

Intentionally left blank

Center of gravity limits A220-300 - Technical data

Applicability: 55001-59999

Table of contents

Page

Center of gravity limits A220-300 - Technical data..... 1
References..... 1
Description..... 1
1 General..... 1
2 Definitions..... 1
3 Equation of Center of Gravity (CG) in terms of % of Mean Aerodynamic Chord (MAC) and inches..... 2
4 Center of Gravity (CG) envelope - Design weights..... 5

List of tables

Page

1 References..... 1
2 FS to % MAC..... 3
3 A220-300 envelope limits..... 7

List of figures

Page

1 A220-300 Center of gravity limits..... 6

References

Table 1 References

Data Module/Technical Publication	Title
None	

Description

1 General

- This data module gives the Center of Gravity (CG) limits of the Airbus A220-300 aircraft.

Note

The data presented is for planning purposes and must be verified by reference to applicable control documents, for example, Weight and Balance Manual (WBM). There can be instances where these documents are not available, if so, the data contained in the Aircraft Recovery Publication (ARP) must be used to determine the best approximate data. For items not listed, contact Airbus.

2 Definitions

- CG

- The CG is a point where the sum of all moments is equal to zero.

- Fuselage Station (FS)
  - The FSs are used to indicate the locations along the X datum line. The FSs are measured in inches (in.) and are perpendicular to the fuselage center line. The values are +ve aft of FS0.
- Water Line (WL)
  - The WLs are used to indicate the locations along the Z datum line. The WLs are measured in inches and are horizontal lines perpendicular to the Buttock Line (BL) and parallel to the fuselage center line. The values are +ve above Z datum line 0 and are -ve to below Z datum line.
- Buttock Line (BL)
  - The BL are used to indicate the locations along the Y datum line. The BLs are measured in inches. The BLs are vertical lines perpendicular to the WL and fuselage center line. The BLs are parallel to the fuselage vertical center line. The values are +ve to the right of aircraft centerline and -ve to left of aircraft centerline.
- Mean Aerodynamic Chord (MAC) or Reference Chord (RC)
  - Distance from the Leading Edge (LE) to the Trailing Edge (TE) of a wing.

3 Equation of Center of Gravity (CG) in terms of % of Mean Aerodynamic Chord (MAC) and inches

- This section gives the equation of CG and its definition.
  - Aircraft CG (% MAC) = ((Aircraft CG - LEMAC) / MAC) * 100
  - Aircraft CG (in.) = ((Aircraft CG (% MAC) / 100) * MAC) + LEMAC

where

Aircraft CG = Aircraft CG measured from fuselage datum 0.

Leading Edge Mean Aerodynamic Chord (LEMAC) = Distance from fuselage datum 0 to the LE of the MAC.

MAC = Mean aerodynamic chord for the aircraft.

LEMAC = 818.998

MAC = 148.86

Example:

Aircraft CG = 859.6 in as determined by Net Recoverable Weight (NRW) calculation.

LEMAC = 818.998

MAC = 148.86

Aircraft CG (% MAC) = ((859.6 - 818.998) / 148.86) * 100

Aircraft CG (% MAC) = 27.28 %

Conversely, the CG (in.) can be determined as follows:

Aircraft CG (in.) = ((Aircraft CG (% MAC) / 100) * MAC) + LEMAC

Example:

Aircraft CG (in.) = ((27.28 / 100) * 148.86) + 818.998 = 859.6 in.

Aircraft CG (in.) = 859.6 in.

Table 2 FS to % MAC

FS in. (m)	0.0	0.1	0.2	0.3	0.4	0.5	0.6	0.7	0.8	0.9
835 (21.21)	10.7	10.8	10.9	10.9	11.0	11.1	11.2	11.2	11.3	11.4
836 (21.23)	11.4	11.5	11.6	11.6	11.7	11.8	11.8	11.9	12.0	12.0
837 (21.26)	12.1	12.2	12.2	12.3	12.4	12.4	12.5	12.6	12.6	12.7
838 (21.29)	12.8	12.8	12.9	13.0	13.0	13.1	13.2	13.2	13.3	13.4
839 (21.31)	13.4	13.5	13.6	13.6	13.7	13.8	13.8	13.9	14.0	14.0
840 (21.34)	14.1	14.2	14.2	14.3	14.4	14.4	14.5	14.6	14.6	14.7
841 (21.36)	14.8	14.8	14.9	15.0	15.0	15.1	15.2	15.2	15.3	15.4
842 (21.39)	15.5	15.5	15.6	15.7	15.7	15.8	15.9	15.9	16.0	16.1
843 (21.41)	16.1	16.2	16.3	16.3	16.4	16.5	16.5	16.6	16.7	16.7
844 (21.44)	16.8	16.9	16.9	17.0	17.1	17.1	17.2	17.3	17.3	17.4
845 (21.46)	17.5	17.5	17.6	17.7	17.7	17.8	17.9	17.9	18.0	18.1
846 (21.49)	18.1	18.2	18.3	18.3	18.4	18.5	18.5	18.6	18.7	18.7
847 (21.51)	18.8	18.9	18.9	19.0	19.1	19.1	19.2	19.3	19.3	19.4
848 (21.54)	19.5	19.5	19.6	19.7	19.8	19.8	19.9	20.0	20.0	20.1
849 (21.56)	20.2	20.2	20.3	20.4	20.4	20.5	20.6	20.6	20.7	20.8

FS in. (m)	0.0	0.1	0.2	0.3	0.4	0.5	0.6	0.7	0.8	0.9
850 (21.59)	20.8	20.9	21.0	21.0	21.1	21.2	21.2	21.3	21.4	21.4
851 (21.62)	21.5	21.5	21.5	21.7	21.8	21.8	21.9	22.0	22.0	22.1
852 (21.64)	22.2	22.2	22.3	22.4	22.4	22.5	22.6	22.6	22.7	22.8
853 (21.67)	22.8	22.9	23.0	23.0	23.1	23.2	23.2	23.3	23.4	23.4
854 (21.69)	23.5	23.6	23.6	23.7	23.8	23.8	23.9	24.0	24.0	24.1
855 (21.72)	24.2	24.3	24.3	24.4	24.5	24.5	24.6	24.7	24.7	24.8
856 (21.74)	24.9	24.9	25.0	25.1	25.1	25.2	25.3	25.3	25.4	25.5
857 (21.77)	25.5	25.6	25.7	25.7	25.8	25.9	25.9	26.0	26.1	26.1
858 (21.79)	26.2	26.3	26.3	26.4	26.5	26.5	26.6	26.7	26.7	26.8
859 (21.82)	26.9	26.9	27.0	27.1	27.1	27.2	27.3	27.3	27.4	27.5
860 (21.84)	27.5	27.6	27.7	27.7	27.8	27.9	27.9	28.0	28.1	28.1
861 (21.87)	28.2	28.3	28.3	28.4	28.5	28.6	28.6	28.7	28.8	28.8
862 (21.89)	28.9	29.0	29.0	29.1	29.2	29.2	29.3	29.4	29.4	29.5
863 (21.92)	29.6	29.6	29.7	29.8	29.8	29.9	30.0	30.0	30.1	30.2
864 (21.95)	30.2	30.3	30.4	30.4	30.5	30.6	30.6	30.7	30.8	30.8
865 (21.97)	30.9	31.0	31.0	31.1	31.2	31.2	31.3	31.4	31.4	31.5
866 (22.00)	31.6	31.6	31.7	31.8	31.8	31.9	32.0	32.0	32.1	32.2
867 (22.02)	32.2	32.3	32.4	32.4	32.5	32.6	32.6	32.7	32.8	32.9

FS in. (m)	0.0	0.1	0.2	0.3	0.4	0.5	0.6	0.7	0.8	0.9
868 (22.05)	32.9	33.0	33.1	33.1	33.2	33.3	33.3	33.4	33.5	33.5
869 (22.07)	33.6	33.7	33.7	33.8	33.9	33.9	34.0	34.1	34.1	34.2
870 (22.10)	34.3	34.3	34.4	34.5	34.5	34.6	34.7	34.7	34.8	34.9
871 (22.12)	34.9	35.0	35.1	35.1	35.2	35.3	35.3	35.4	35.5	35.5
872 (22.15)	35.6	35.7	35.7	35.8	35.9	35.9	36.0	36.1	36.1	36.2
873 (22.17)	36.3	36.3	36.4	36.5	36.5	36.6	36.7	36.7	36.8	36.9
874 (22.20)	36.9	37.0	37.1	37.1	37.2	37.3	37.4	37.4	37.5	37.6
875 (22.23)	37.6	37.7	37.8	37.8	37.9	38.0	38.0	38.1	38.2	38.2
876 (22.25)	38.3	38.4	38.4	38.5	38.6	38.6	38.7	38.8	38.8	38.9
877 (22.28)	39.0	39.0	39.1	39.2	39.2	39.3	39.4	39.4	39.5	39.6
878 (22.30)	39.6	39.7	39.8	39.8	39.9	40.0	40.0	40.1	40.2	40.2
879 (22.33)	40.3	40.4	40.4	40.5	40.6	40.6	40.7	40.8	40.8	40.9
880 (22.35)	41.0	41.0	41.1	41.2	41.2	41.3	41.4	41.4	41.5	41.6

Example: FS 850.4 in. = 21.1 % MAC

4 Center of Gravity (CG) envelope - Design weights

- The envelope gives the weight and CG variations and limits for Maximum Ramp Weight (MRW), Maximum Take-Off Weight (MTOW), Maximum Landing Weight (MLW), Maximum Zero Fuel Weight (MZFW), and Minimum Flight Weight (MFW).
- To use the CG envelope Fig. 1 , refer to Table 3.

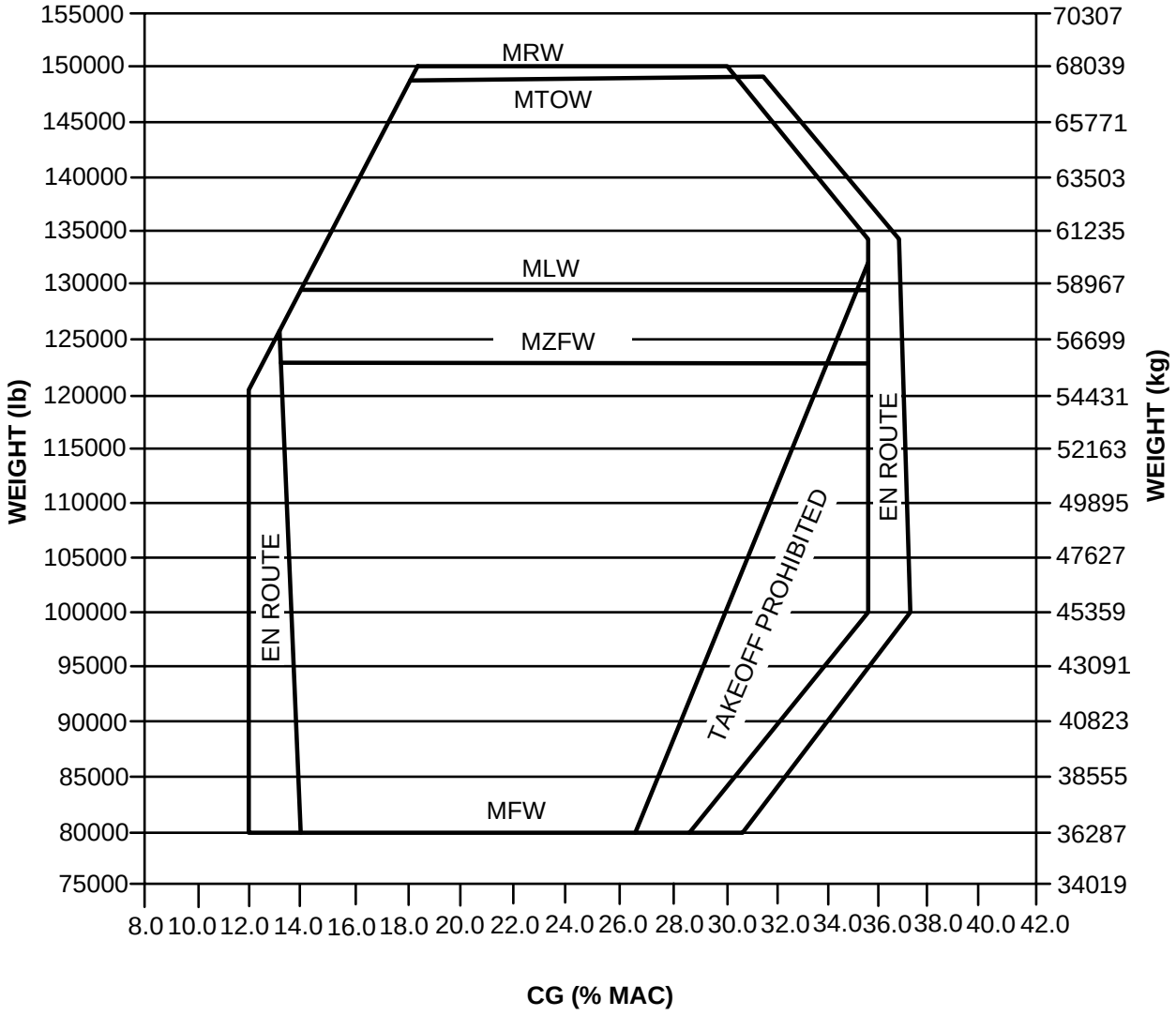

CENTER OF GRAVITY LIMITS

ICN-BD500-A-J084103-C-3AB48-58006-A-001-01

Figure 1 A220-300 Center of gravity limits

Table 3 A220-300 envelope limits

Weight lb (kg)	Fwd Limits		Aft Limits	
	Flight %	Ground %	Flight %	Ground %
80000 (36287)	12.0	14.0	31.0	29.0
85000 (38555)	12.0	13.9	32.6	30.7
90000 (40823)	12.0	13.8	34.1	32.4
95000 (43091)	12.0	13.7	35.7	34.1
100000 (45359)	12.0	13.7	37.3	35.8
105000 (47627)	12.0	13.6	37.3	35.8
110000 (49895)	12.0	13.5	37.2	35.8
115000 (52163)	12.0	13.4	37.2	35.8
120000 (54431)	12.0	13.3	37.1	35.8
120500 (54658)	12.0	13.3	37.1	35.8
125000 (56699)	13.0	13.2	37.1	35.8
125972 (57140)	13.2	13.2	37.0	35.8
130000 (58967)	14.1	14.1	37.0	35.8
134000 (60781)	15.0	15.0	36.9	35.8
135000 (61235)	15.2	15.2	36.9	35.5
145000 (65771)	17.5	17.5	33.1	32.0
149000 (67585)	18.4	18.4	31.6	30.6
150000 (68039)	18.6	18.6	N/A	30.3

Intentionally left blank

Cargo compartment CS100 - Technical data

Applicability: 50001-54999

Table of contents

Page

Cargo compartment CS100 - Technical data..... 1
References..... 1
Description..... 1
1 General..... 1
2 Cargo dimensions..... 1
3 Doors dimensions..... 9

List of tables

Page

1 References..... 1
2 Cargo dimensions..... 2
3 Cargo doors dimensions..... 9

List of figures

Page

1 Cargo overview..... 3
2 Aircraft cargo side view..... 4
3 Cargo compartment section..... 5
4 Forward cargo net compartment..... 6
5 Aft Cargo Net Compartment..... 7
6 Aft cargo section..... 8
7 Cargo doors dimensions..... 10

References

Table 1 References

Data Module/Technical Publication	Title
None	

Description

1 General

- This section provides data concerning the cargo compartment dimensions.

2 Cargo dimensions

- Two doors give access to the forward and aft cargo. Table 2 shows the general dimensions of the respective cargo areas.
- The figures below show the physical dimensions, the shape and the general layout of the respective cargo area.

Table 2 Cargo dimensions

Description	Volume		FS		FS		WL		WL	
	(cu ft)	(cu m)	From (in)	To (in)	From (m)	To (m)	From (in)	To (in)	From (m)	To (m)
Forward cargo	364	10.3	475.6	668.5	12.1	17.0	102.8	145.2	2.6	3.7
Aft cargo	474	13.4	995.5	1262.0	25.3	32.1	102.8	145.2	2.6	3.7
Total	838	23.7								

Fuselage Station (FS)

Water Line (WL)

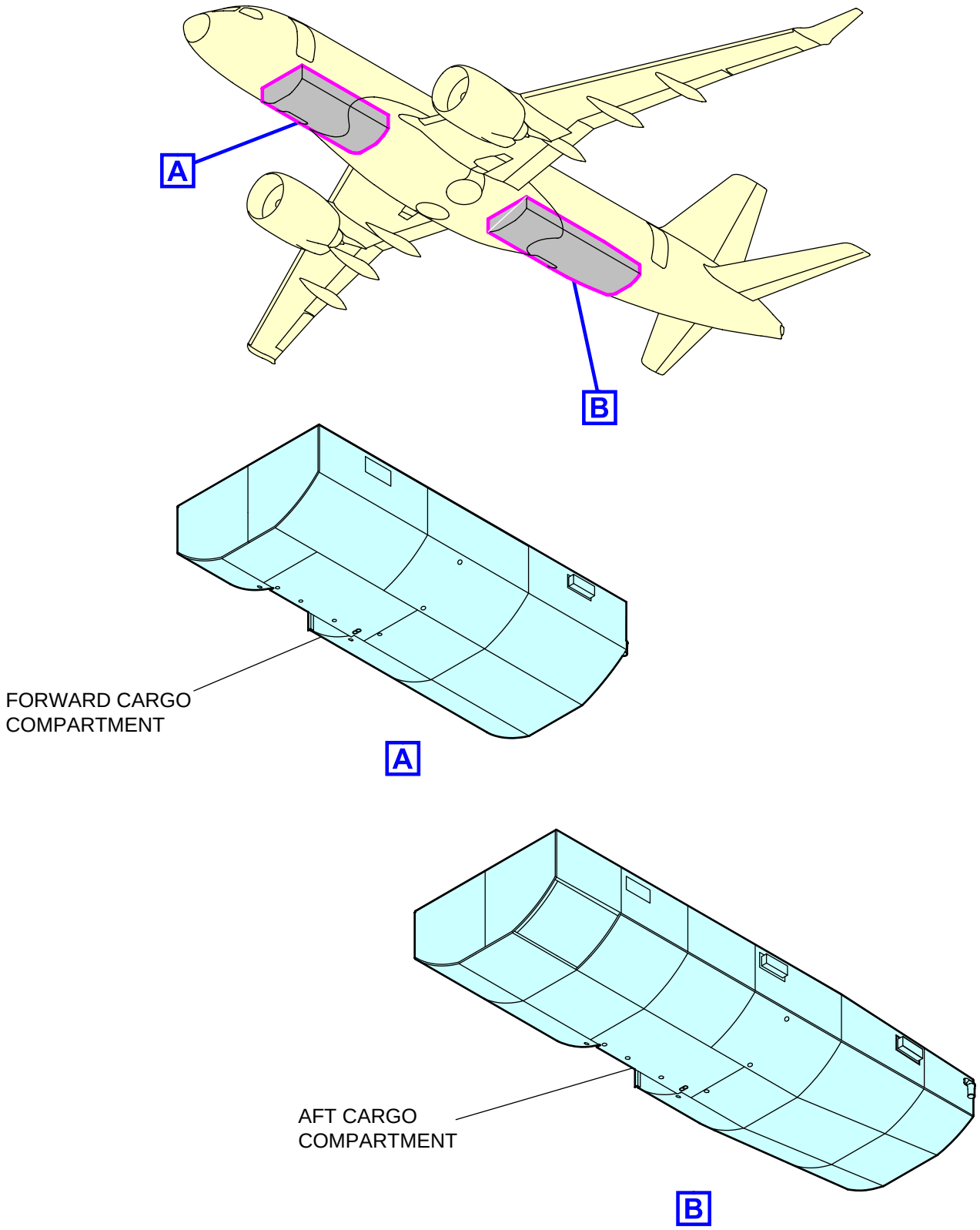

ICN-BD500-A-J084305-A-3AB48-10413-A-001-01

Figure 1 Cargo overview

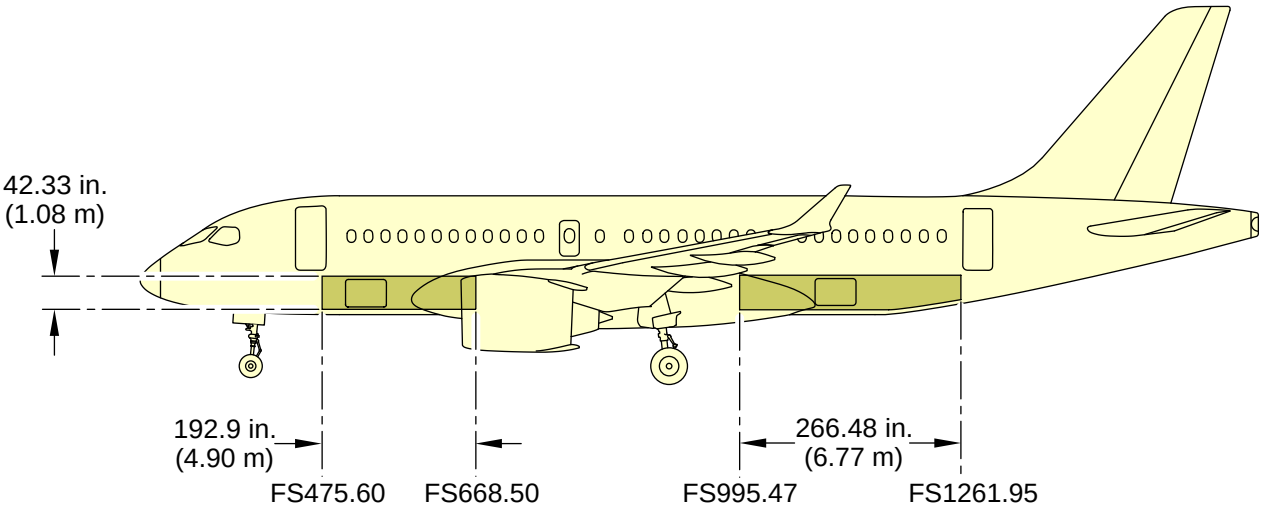

ICN-BD500-A-J084305-A-3AB48-10441-A-001-01

Figure 2 Aircraft cargo side view

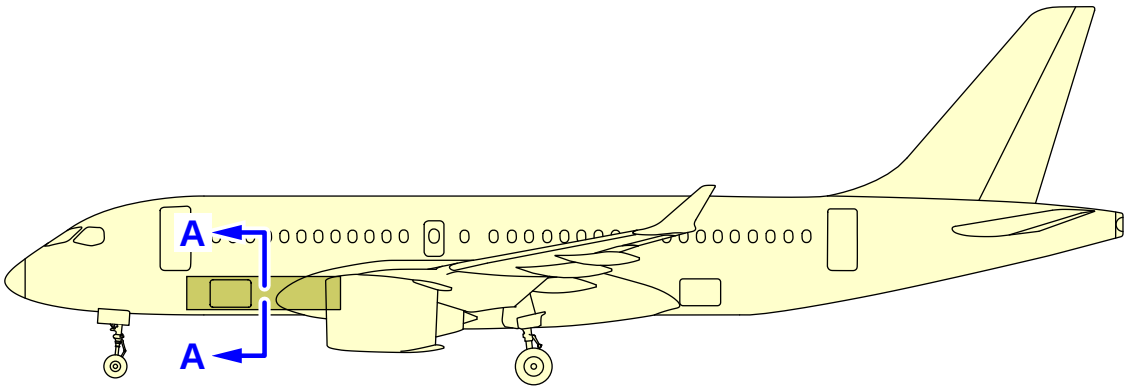

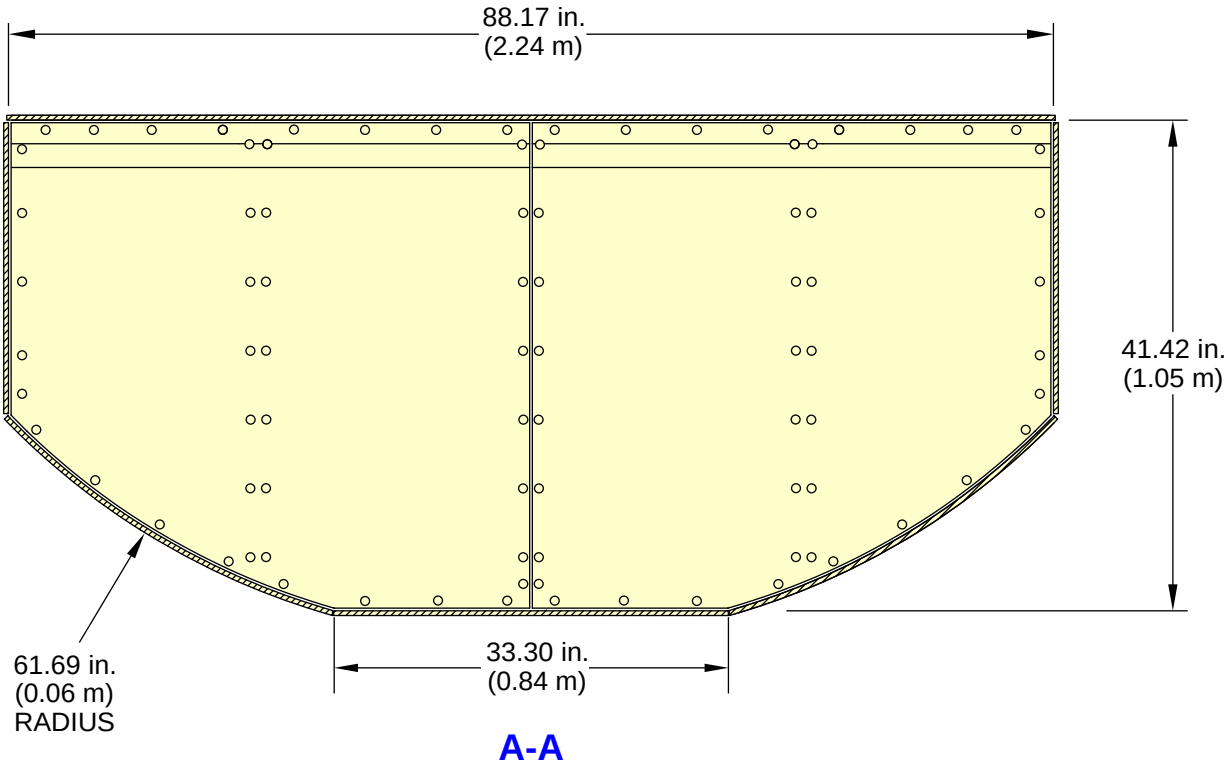

ICN-BD500-A-J084305-A-3AB48-10438-A-003-01

Figure 3 Cargo compartment section

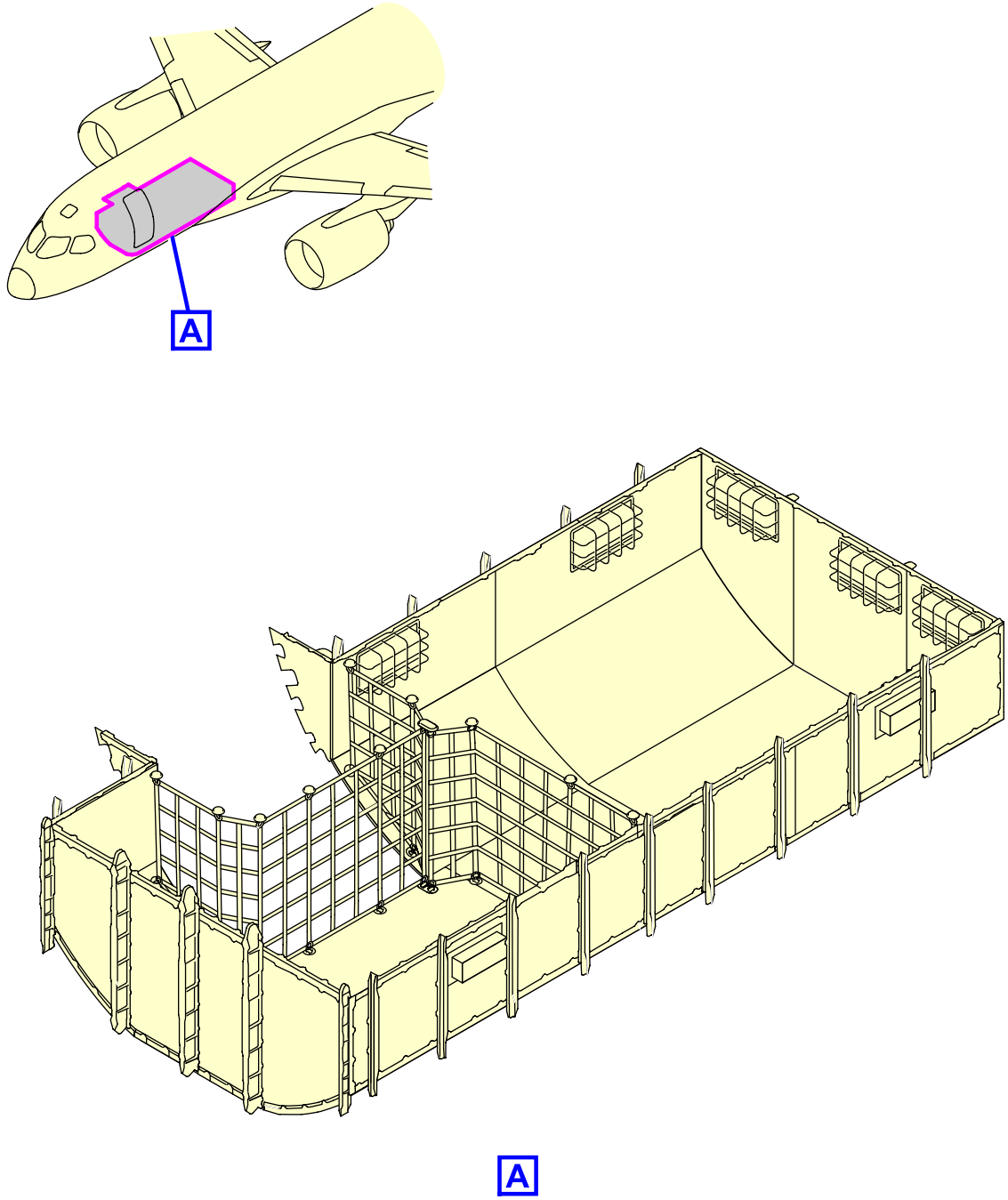

ICN-BD500-A-J084305-A-3AB48-10439-A-001-01

Figure 4 Forward cargo net compartment

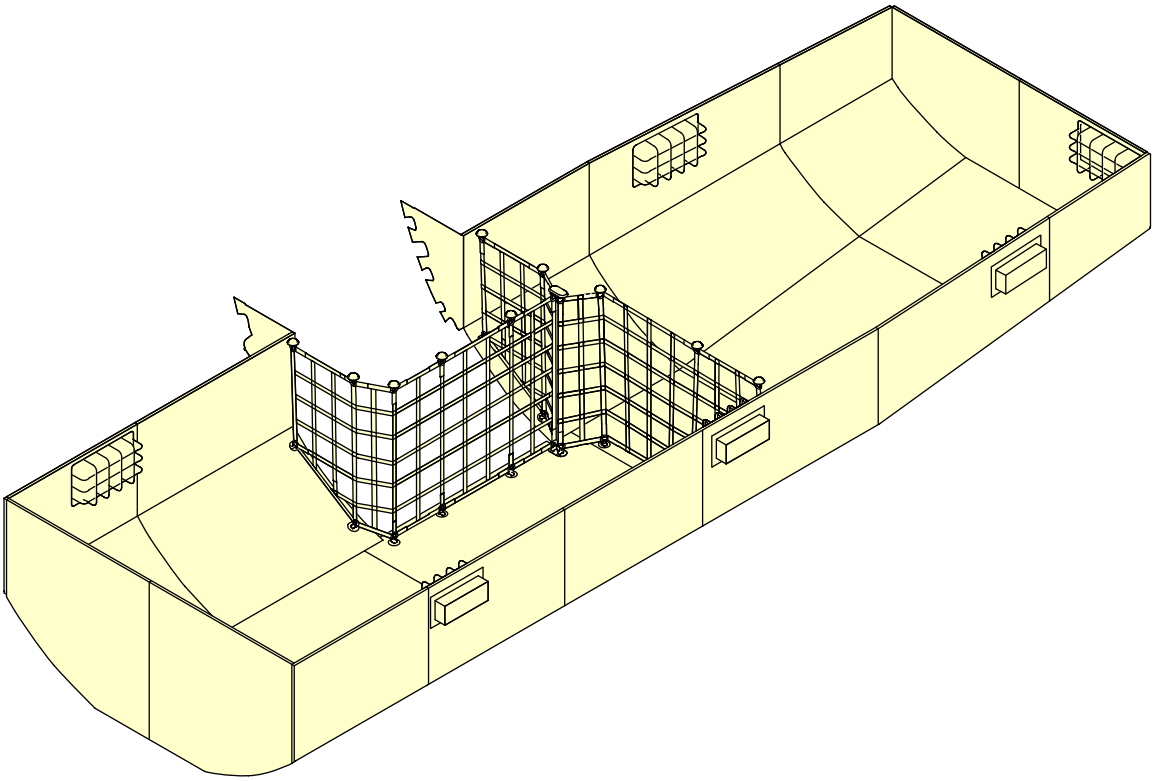

ICN-BD500-A-J084305-A-3AB48-21657-A-001-01

Figure 5 Aft Cargo Net Compartment

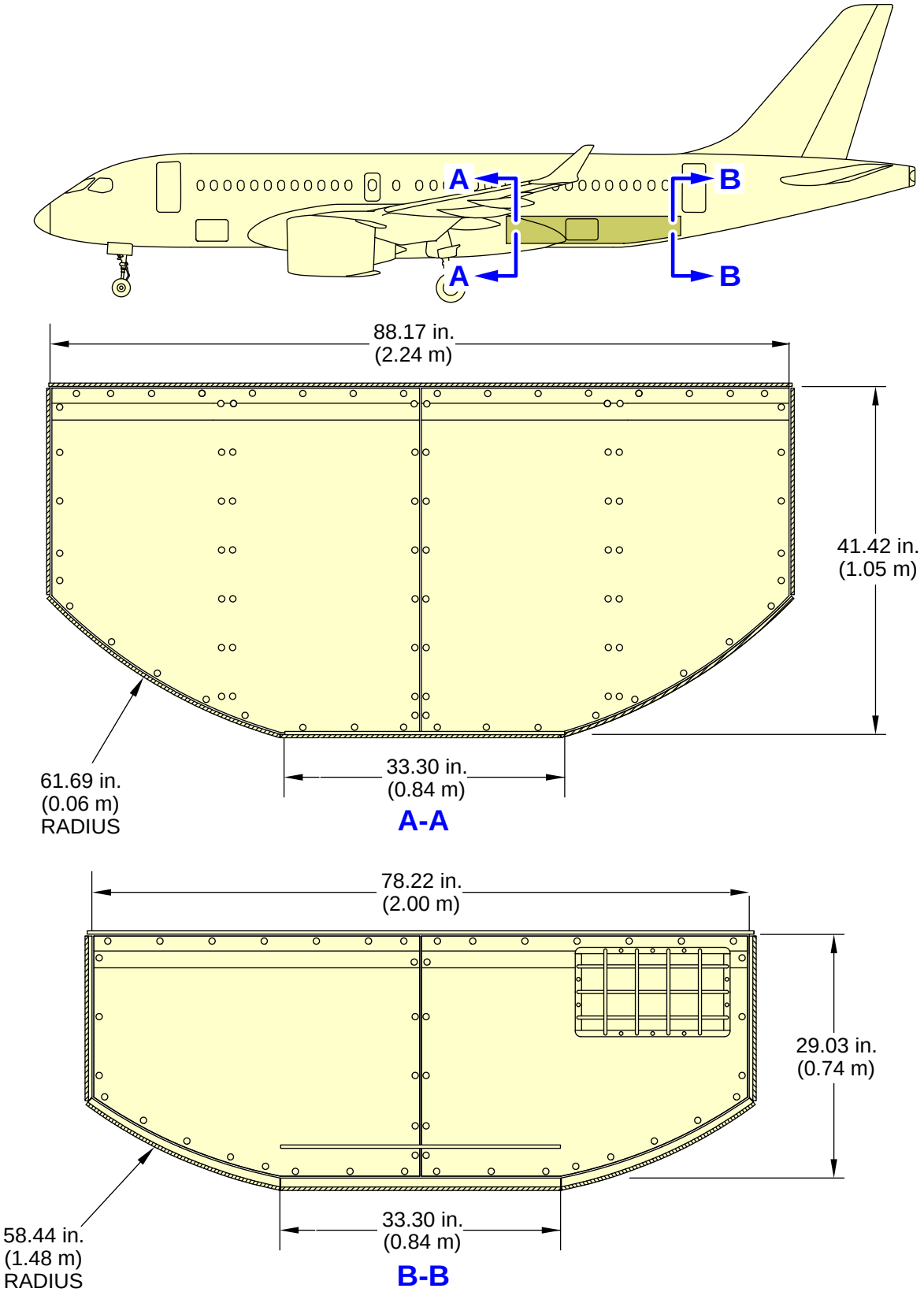

ICN-BD500-A-J084305-A-3AB48-10440-A-002-01

Figure 6 Aft cargo section

3 Doors dimensions

- Refer to Table 3 and Fig. 7 for cabin doors dimensions.

Table 3 Cargo doors dimensions

	Dimensions (ft)	Dimensions (m)
Fwd Cargo Compartment Door - A		
Height	2.67	0.81
Width	3.67	1.12
Aft Cargo Compartment Door - B		
Height	2.67	0.81
Width	3.67	1.12

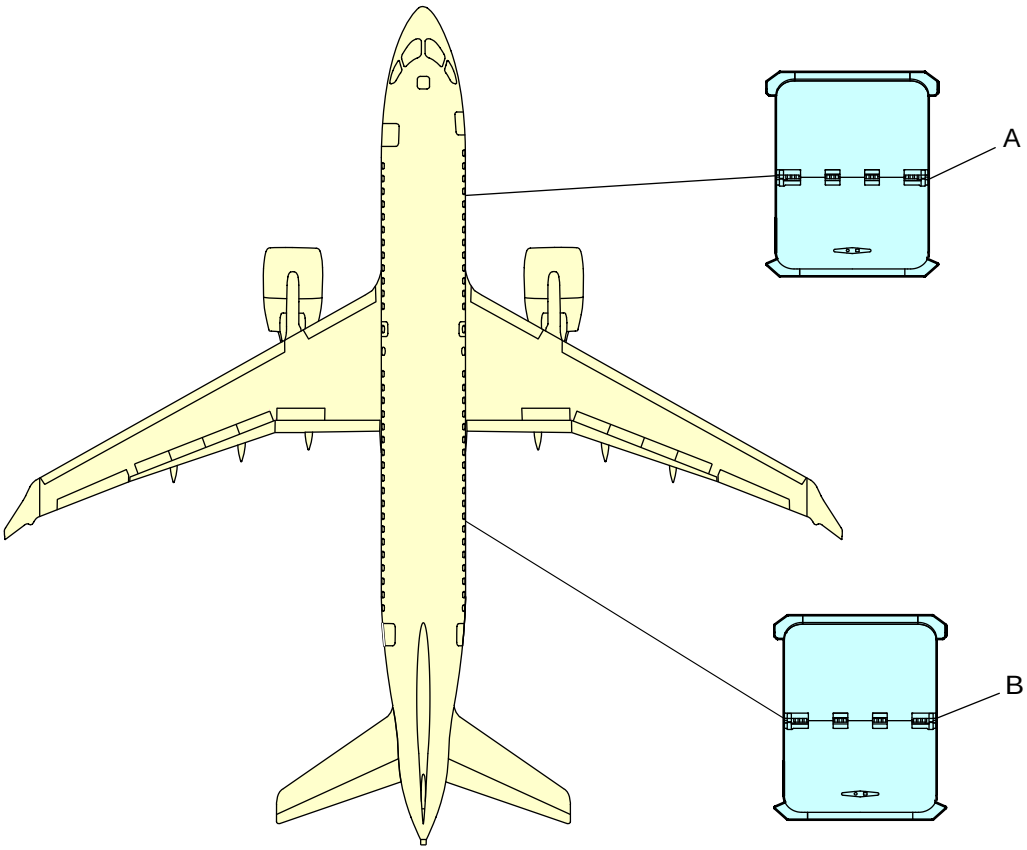

ICN-BD500-A-J084305-A-3AB48-20832-A-001-01

Figure 7 Cargo doors dimensions

Cargo Compartment A220-300 - Technical data

Applicability: 55001-59999

Table of contents

Page

Cargo Compartment A220-300 - Technical data..... 1
References..... 1
Description..... 1
1 General..... 1
2 Cargo compartment dimensions..... 1
3 Door dimensions..... 9

List of tables

Page

1 References..... 1
2 Cargo dimensions..... 2
3 Cargo compartment door dimensions..... 9

List of figures

Page

1 Cargo compartment overview A220-300..... 3
2 Cargo compartments side view A220-300..... 4
3 Forward cargo compartment section A220-300..... 5
4 Aft cargo compartment section A220-300..... 6
5 Forward cargo compartment net A220-300..... 7
6 Aft cargo compartment net A220-300..... 8
7 Cargo compartment door dimensions A220-300..... 10

References

Table 1 References

Data Module/Technical Publication	Title
None	

Description

1 General

- This section gives data about the cargo compartment dimensions.

2 Cargo compartment dimensions

- Two doors give access to the forward and aft cargo compartment. Table 2 shows the general dimensions of the respective cargo areas.
- Fig. 1 , Fig. 2 , Fig. 3 , Fig. 4 , Fig. 5 , Fig. 6 show the physical dimensions, shape and general layout of the respective cargo area.

Table 2 Cargo dimensions

Descrip-tion	Volume		FS		FS		WL		WL	
	(ft³)	(m³)	From (in.)	To (in.)	From (m)	To (m)	From (in.)	To (in.)	From (m)	To (m)
Forward cargo	523.0	14.8	391.6	668.5	9.9	17.0	102.8	145.2	2.6	3.7
Aft cargo	593.0	16.8	995.5	1325.0	25.3	33.7	102.8	145.2	2.6	3.7
Total	1116.0	31.6								
Fuselage Station (FS) Water Line (WL)										

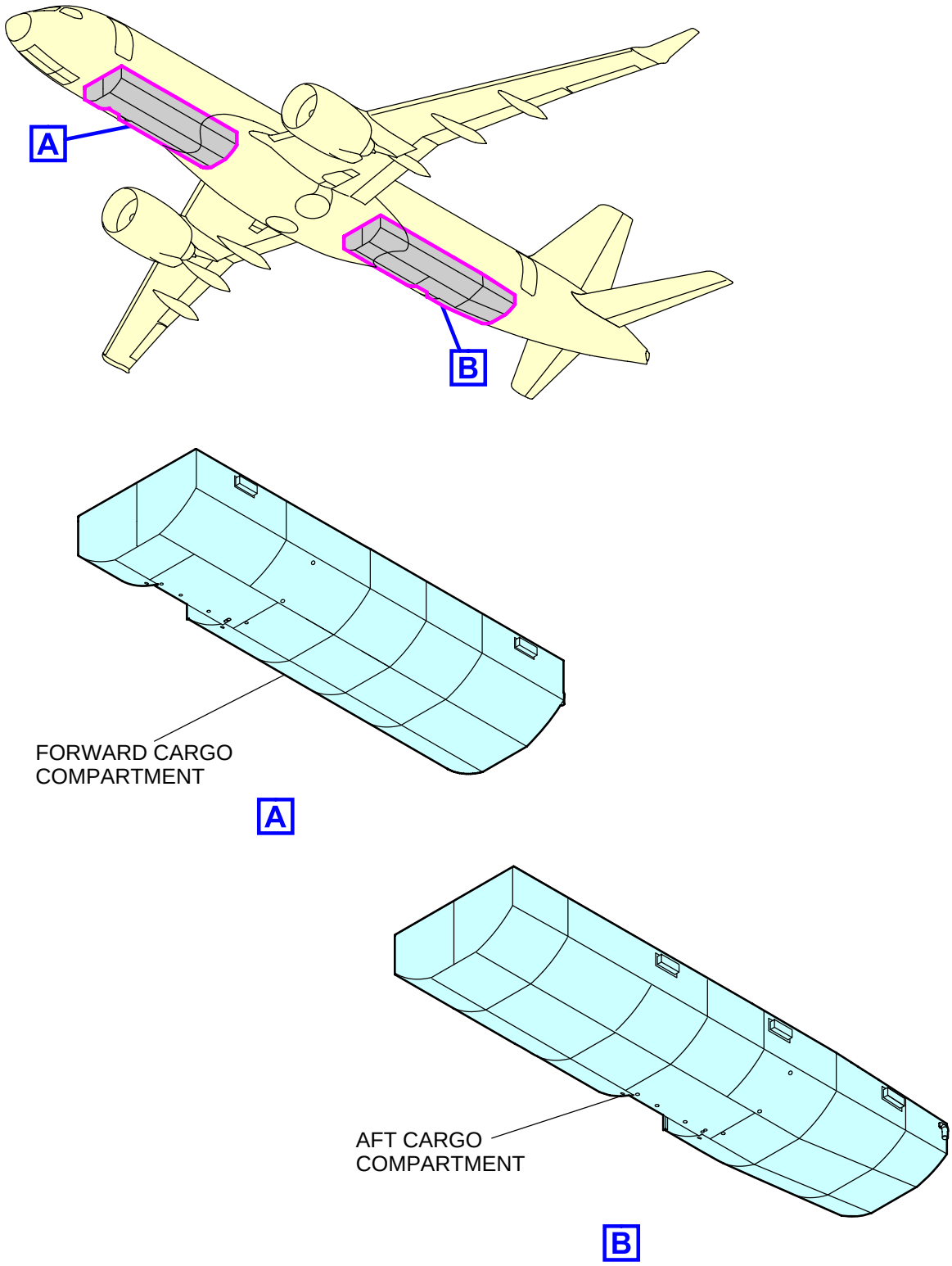

ICN-BD500-A-J084305-A-3AB48-24364-A-001-01

Figure 1 Cargo compartment overview A220-300

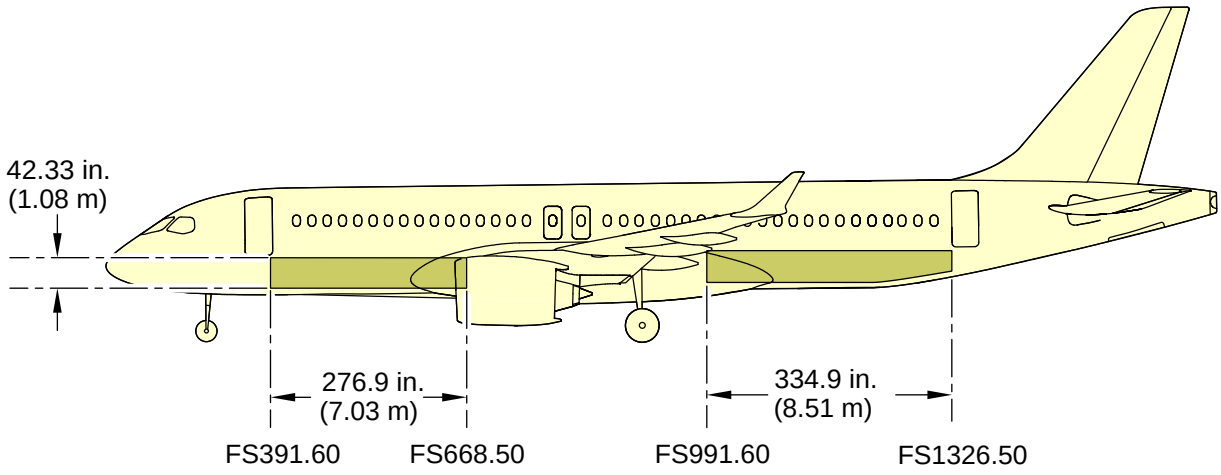

ICN-BD500-A-J084305-A-3AB48-24365-A-001-01

Figure 2 Cargo compartments side view A220-300

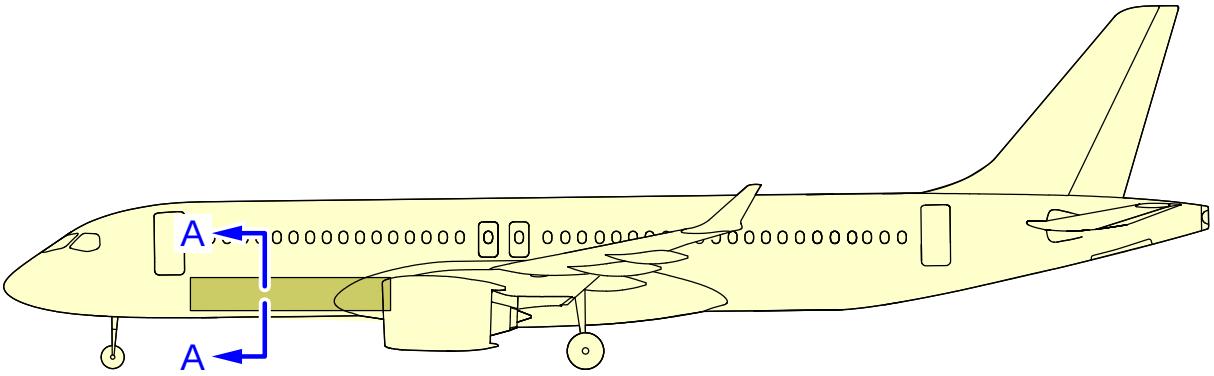

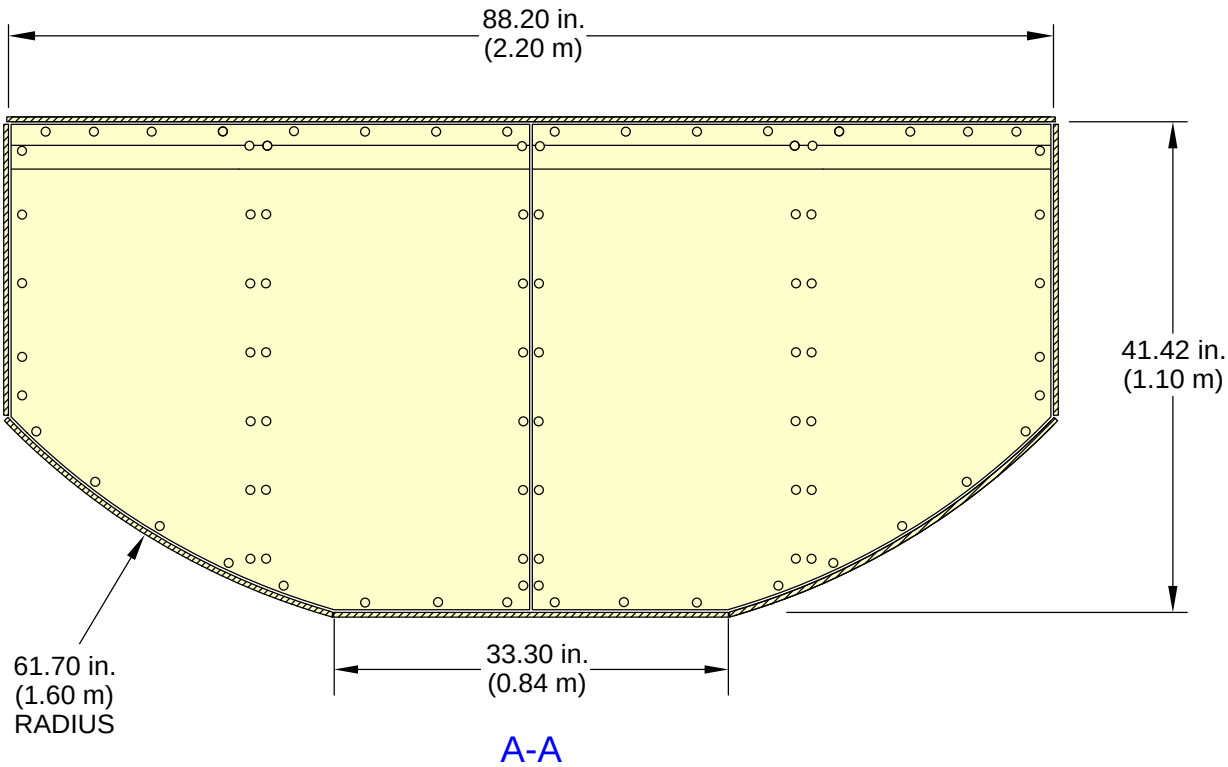

ICN-BD500-A-J084305-A-3AB48-24366-A-001-01

Figure 3 Forward cargo compartment section A220-300

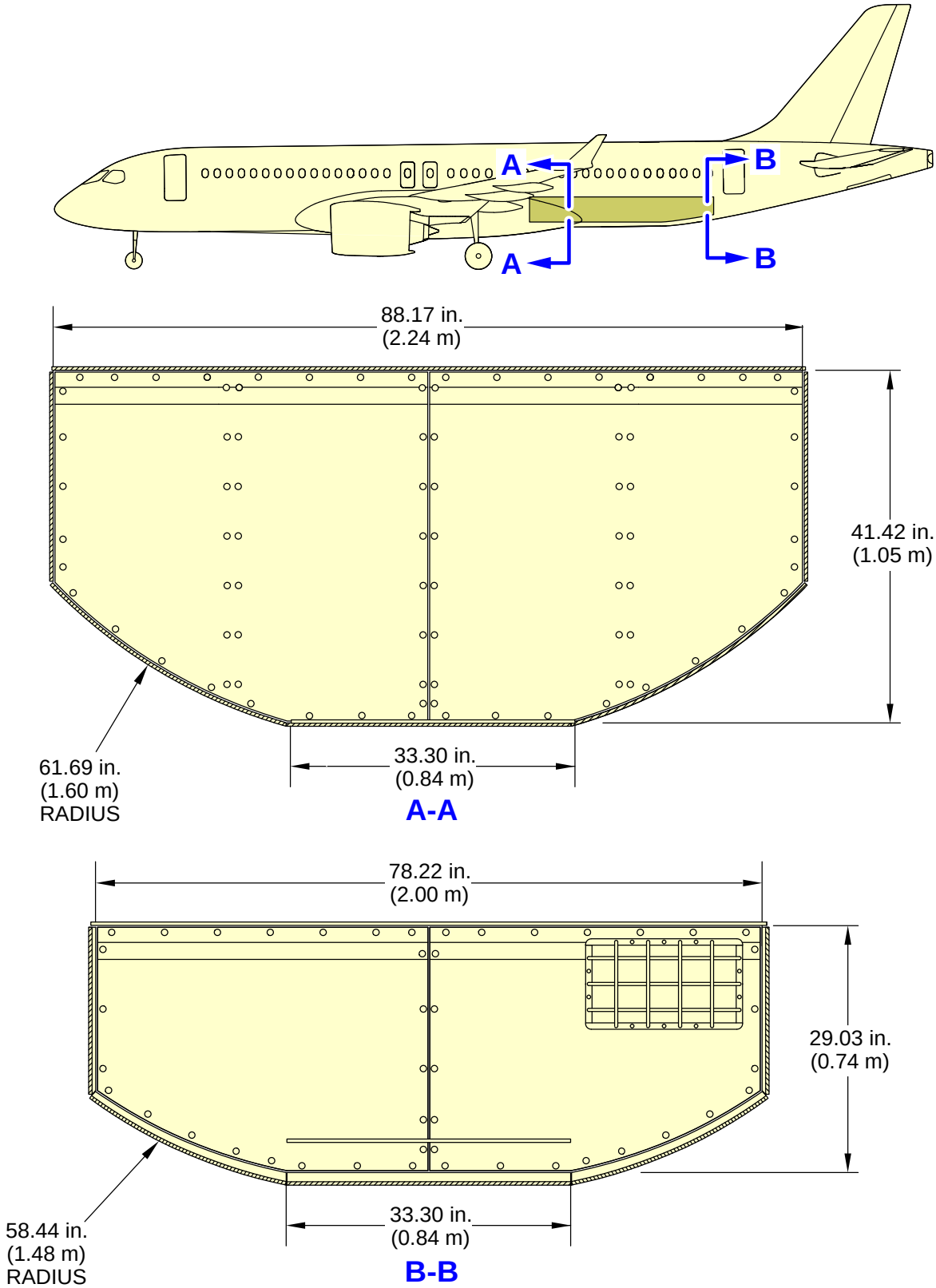

ICN-BD500-A-J084305-A-3AB48-24372-A-001-01

Figure 4 Aft cargo compartment section A220-300

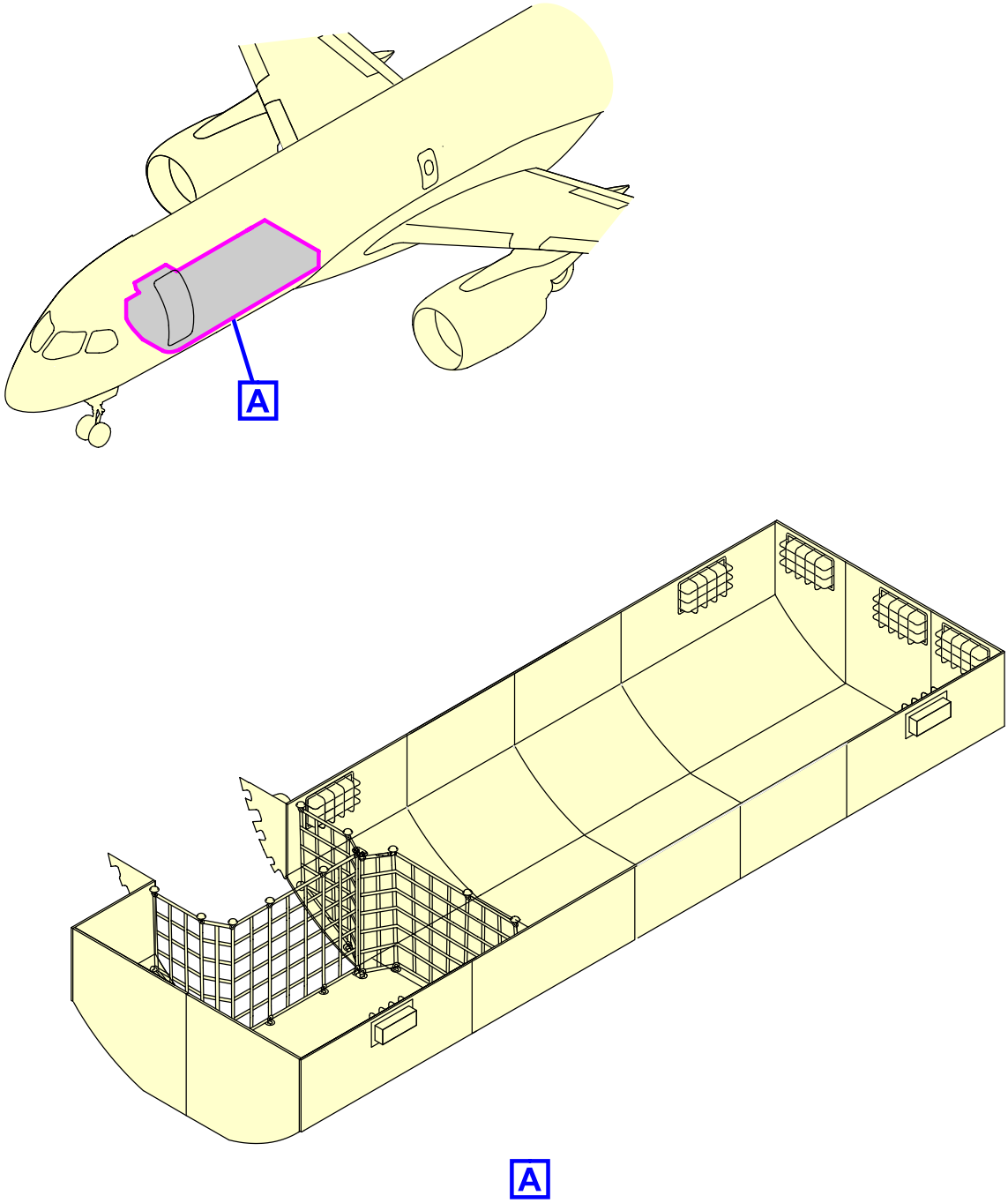

ICN-BD500-A-J084305-A-3AB48-24368-A-001-01

Figure 5 Forward cargo compartment net A220-300

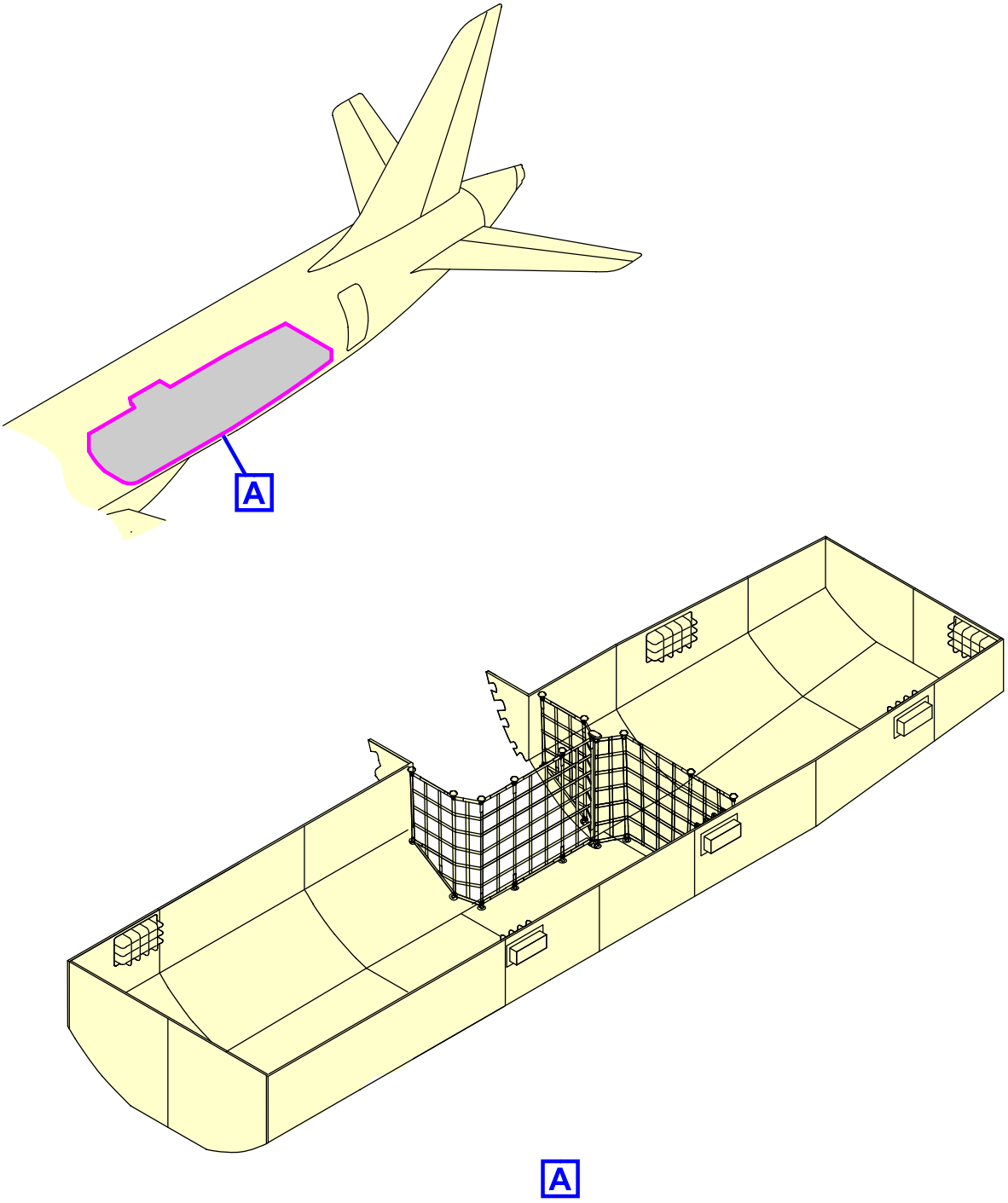

ICN-BD500-A-J084305-A-3AB48-24371-A-001-01

Figure 6 Aft cargo compartment net A220-300

3 Door dimensions

- Refer to Table 3 and Fig. 7 for the cargo compartment door dimensions.

Table 3 Cargo compartment door dimensions

	Dimensions (ft)	Dimensions (m)
Forward Cargo Compartment Door - A		
Height	2.67	0.81
Width	3.67	1.12
Aft Cargo Compartment Door - B		
Height	2.67	0.81
Width	3.67	1.12

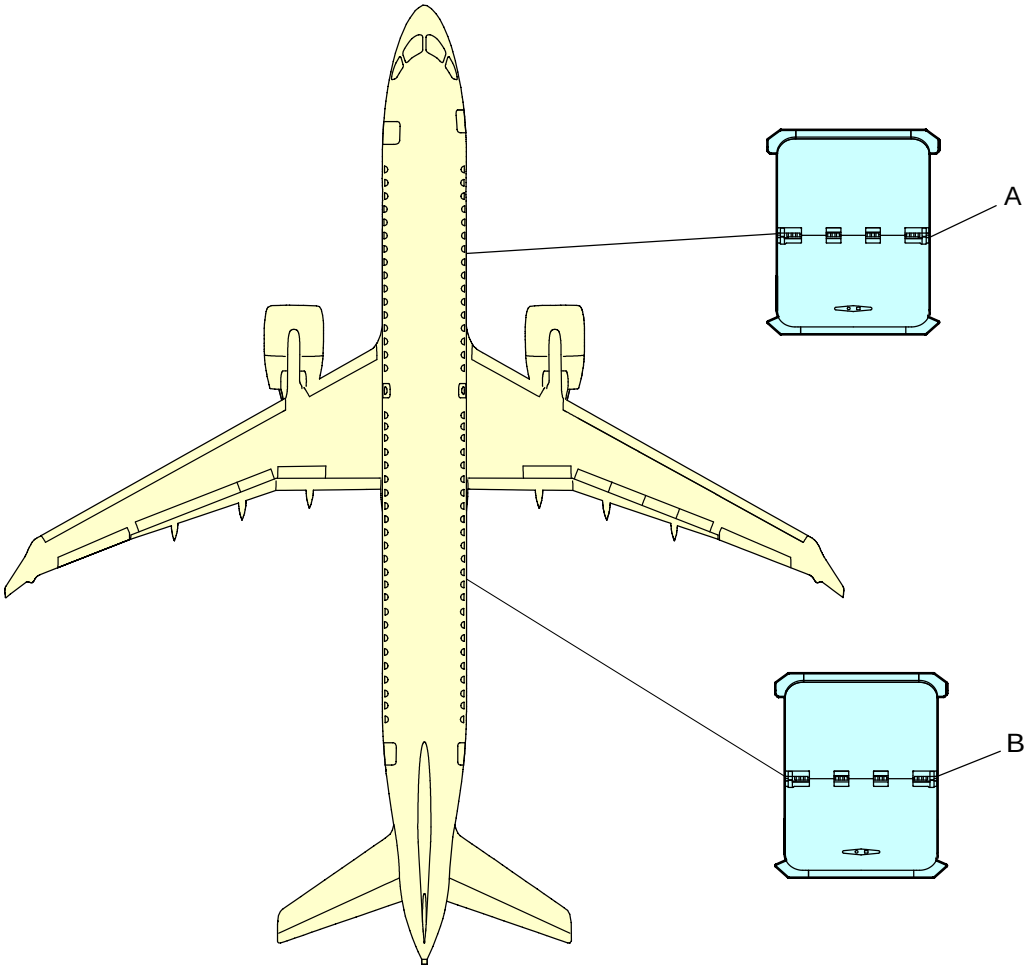

ICN-BD500-A-J084305-A-3AB48-24373-A-001-01

Figure 7 Cargo compartment door dimensions A220-300

Cargo loading A220-100 - Technical data

Applicability: 50001-54999

Table of contents

Page

Cargo loading A220-100 - Technical data..... 1
References..... 1
Description..... 1
1 General..... 1
2 Cargo compartment weights and moments..... 1

List of tables

Page

1 References..... 1
2 Cargo compartment weight and moments data..... 1

References

Table 1 References

Data Module/Technical Publication	Title
None	

Description

1 General

- This data module gives the cargo compartment load limits and moments for Airbus A220-100 aircraft.

Note

The data presented in this DM is for planning purposes only and must be verified by applicable control documents, for example, Weight and Balance Manual (WBM). There can be instances where these control documents are not available, if so, the data contained in the Aircraft Recovery Publication (ARP) must be used to determine the best approximate data. For items not listed, contact Airbus.

2 Cargo compartment weights and moments

This section gives the data about weights and moments produced by the forward and aft cargo compartments.

Table 2 Cargo compartment weight and moments data

Compartment location	A220-100		
	Weight lb (kg)	Xcg in. (m)	Moment lb#in. (kg#m)
Forward cargo	3742 (1697.3)	572.0 (14.53)	2140611 (24662.5)

Compartment location	A220-100		
	Weight lb (kg)	Xcg in. (m)	Moment lb#in. (kg#m)
Aft cargo	4548 (2062.9)	1128.7 (28.67)	5133373 (59142.9)

Cargo loading A220-300 - Technical data

Applicability: 55001-59999

Table of contents

Page

Cargo loading A220-300 - Technical data..... 1
References..... 1
Description..... 1
1 General..... 1
2 Cargo compartment weights and moments..... 1

List of tables

Page

1 References..... 1
2 Cargo compartment weight and moments data..... 1

References

Table 1 References

Data Module/Technical Publication	Title
None	

Description

1 General

- This data module gives the cargo compartment load limits and moments for the Airbus A220-300 aircraft.

Note

The data presented in this DM is for planning purposes only and must be verified by applicable control documents, for example, Weight and Balance Manual (WBM). There can be instances where these control documents are not available, if so, the data contained in the Aircraft Recovery Publication (ARP) must be used to determine the best approximate data. For items not listed, contact Airbus.

2 Cargo compartment weights and moments

This section gives the data about weights and moments produced by the forward and aft cargo compartments.

Table 2 Cargo compartment weight and moments data

Compartment location	**A220-300**		
	Weight lb (kg)	**Xcg in. (m)**	**Moment lb#in (kg#m)**
Forward cargo	5393 (2446.2)	530.0 (13.46)	2858560 (32934.2)

Compartment location	A220-300		
	Weight lb (kg)	Xcg in. (m)	Moment lb#in (kg#m)
Aft cargo	5746 (2606.3)	1160.2 (29.47)	6666567 (76807.2)

Balance limits A220-100 - Technical data

Applicability: 50001-54999

Table of contents

Page

Balance limits A220-100 - Technical data 1
References 1
Description 1
1 General 1
2 Static stability 2
3 Towing 2
4 Nose landing gear 3

List of tables

Page

1 References 1
2 Snow weight and moment on horizontal stabilizer 2

List of figures

Page

1 Tip over balance limit 4

References

Table 1 References

Data Module/Technical Publication	Title
None	

Description

1 General

- This section provides data concerning the static balance limits
- A change in the configuration of the aircraft can put the aircraft into a tip−over condition.
- The changes can include one or more of the following items:
  - Addition of equipment
  - Removal of equipment
  - Moving of equipment
  - Unusual ground equipment
  - Snow accumulation
  - Wind

2 Static stability

- Before you make any change to the aircraft, perform the steps that follow to ensure that the aircraft will remain stable:

  1 Perform an analysis of the aircraft weight and balance for the new configuration

  2 Make sure that the new weight and Center of Gravity (CG) are within the limits

  3 If the configuration can put the aircraft out of the safe limits, install the applicable ballast in the forward compartment but not more than the floor load limits (refer to Weight and Balance Manual).

  4 Make sure that you obey the applicable precautions if there is snow on the horizontal stabilizer, or if the aircraft is parked on a slope.

  5 Refer to Table 2 for the moment effect on the aircraft due to freshly fallen snow on the horizontal stabilizer.

Table 2 Snow weight and moment on horizontal stabilizer

Depth		Weight		Moment	
(in)	**(m)**	**(lb)**	**(kg)**	**(lb.in)**	**(kg.m)**
2	0.05	418	189.6	6.20E+5	7.14E+3
4	0.10	836	379.2	1.24E+6	1.43E+4
6	0.15	1254	568.8	1.86E+6	2.14E+4
8	0.20	1672	758.4	2.48E+6	2.86E+4
10	0.25	2090	948.0	3.10E+6	3.57E+4
12	0.30	2508	1137.6	3.72E+6	4.29E+4
14	0.36	2926	1327.2	4.34E+6	5.00E+4
16	0.41	3344	1516.8	4.96E+6	5.71E+4
18	0.46	3762	1706.4	5.58E+6	6.43E+4
20	0.51	4180	1896.0	6.20E+6	7.14E+4
Fresh fallen snow on horizontal stabilizer, area of 314 sq ft (29.2 sq m) and CG position is Fuselage Station (FS) 1483 in (37.7 m)					
Note Assuming snow density of 8 lb/cu ft (128 kg/cu m)					

3 Towing

- When the aircraft is towed, a minimum load of 4000 lb (1814.4 kg) on the Nose Landing Gear (NLG) is required, refer to Fig. 1 .
- If the NLG load is less than the minimum, add ballast in the forward compartment.

- Obey the load limits of the cabin floor structure and the load limits of the floor panels and fuselage loading (refer to Weight and Balance Manual).

4 Nose landing gear

- When the aircraft is jacked a minimum of 1000 lb (453.6 kg) on the NLG is required to avoid tip over, refer to Fig. 1 .
- If the NLG load is less than the minimum, add ballast in the forward cargo compartment.
- Obey the load limits of the cabin floor structure and the load limits of the floor panels and fuselage loading (refer to Weight and Balance Manual).

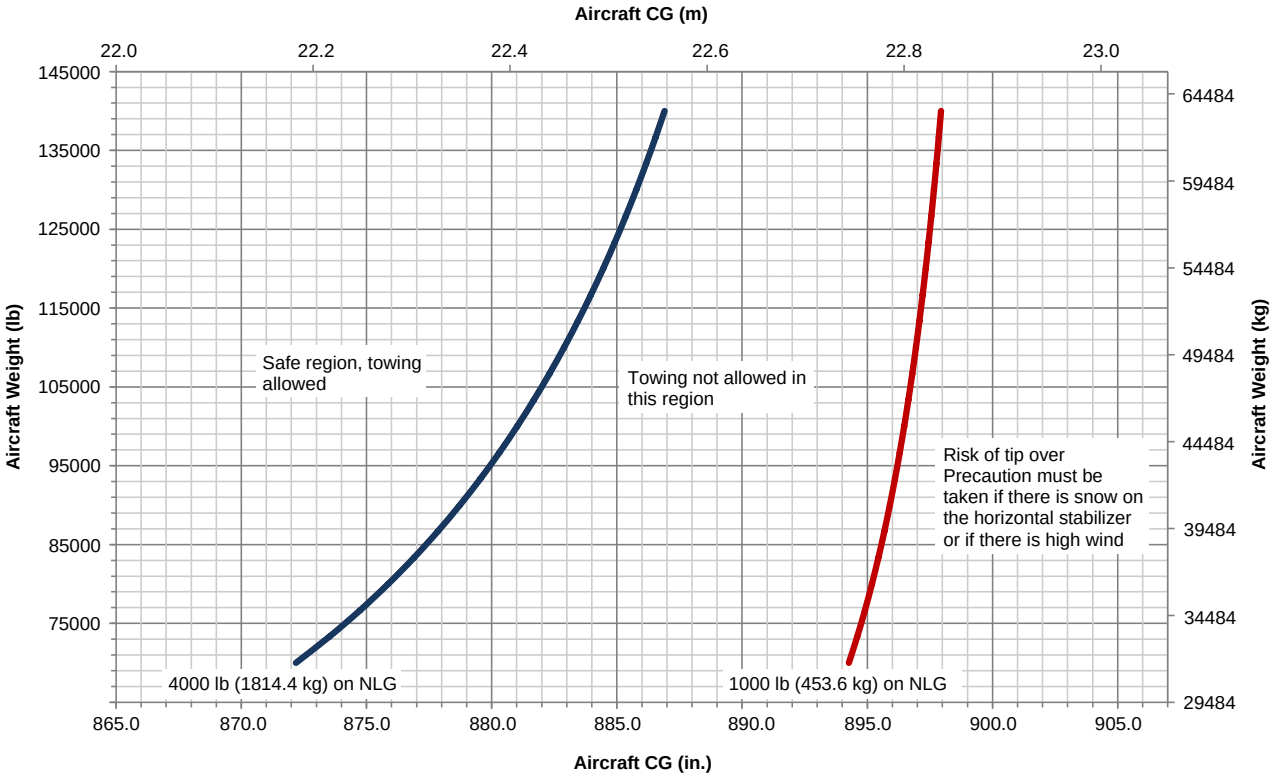

ICN-BD500-A-J085001-A-3AB48-10452-A-001-01

Figure 1 Tip over balance limit

Balance limits A200-300 - Technical data

Applicability: 55001-59999

Table of contents

Page

Balance limits A200-300 - Technical data 1
References 1
Description 1
1 General 1
2 Static stability 2
3 Towing 2
4 Nose landing gear 3

List of tables

Page

1 References 1
2 Snow weight and moment on horizontal stabilizer 2

List of figures

Page

1 Tip-over balance limit A220-300 4

References

Table 1 References

Data Module/Technical Publication	Title
None	

Description

1 General

- This section gives data about the static balance limits.
- A change in the configuration of the aircraft can put the aircraft into a tip-over condition.
- The changes can include one or more of the following items:
  - Addition of equipment
  - Removal of equipment
  - Moving of equipment
  - Unusual ground equipment
  - Snow accumulation
  - Wind

2 Static stability

- Before you make any change to the aircraft, do the steps that follow to make sure that the aircraft will remain stable:

  1 Do an analysis of the aircraft weight and balance for the new configuration

  2 Make sure that the new weight and Center of Gravity (CG) are with the limits

  3 If the configuration can put the aircraft out of the safe limits, install the applicable ballast in the forward compartment but not more than the floor load limits (refer to Weight and Balance Manual).

  4 Make sure that you obey the applicable precautions if there is snow on the horizontal stabilizer, or if the aircraft is parked on a slope.

  5 Refer to Table 2 for the moment effect on the aircraft due to freshly fallen snow on the horizontal stabilizer.

Table 2 Snow weight and moment on horizontal stabilizer

Depth		Weight		Moment	
(in.)	**(m)**	**(lb)**	**(kg)**	**(lb·in)**	**(kg·m)**
2.00	0.05	418.0	189.6	6.46E+5	7.45E+3
4.00	0.10	836.0	379.2	1.29E+6	1.49E+4
6.00	0.15	1254.0	568.8	1.94E+6	2.23E+4
8.00	0.20	1672.0	758.4	2.58E+6	2.98E+4
10.00	0.25	2090.0	948.0	3.23E+6	3.72E+4
12.00	0.30	2508.0	1137.6	3.88E+6	4.47E+4
14.00	0.36	2926.0	1327.2	4.52E+6	5.21E+4
16.00	0.41	3344.0	1516.8	5.17E+6	5.96E+4
18.00	0.46	3762.0	1706.4	5.82E+6	6.70E+4
20.00	0.51	4180.0	1896.0	6.46E+6	7.45E+4
Fresh fallen snow on horizontal stabilizer, area of 314 ft² (29.2 m²) and CG position is Fuselage Station (FS) 1546.00 in. (39.27 m)					
Note Assuming snow density of 8 lb/ft³ (128 kg/m³)					

3 Towing

- When the aircraft is towed, a minimum load of 4000 lb (1814.4 kg) on the Nose Landing Gear (NLG) is required, refer to Fig. 1 .
- If the NLG load is less than the minimum, add ballast in the forward compartment.

- Obey the load limits of the cabin floor structure and the load limits of the floor panels and fuselage loading (refer to Weight and Balance Manual).

4 Nose landing gear

- When the aircraft is jacked, a minimum of 1000 lb (453.6 kg) on the NLG is required to prevent tip-over, refer to Fig. 1 .
- If the NLG load is less than the minimum, add ballast in the forward cargo compartment.
- Obey the load limits of the cabin floor structure and the load limits of the floor panels and fuselage loading (refer to Weight and Balance Manual).

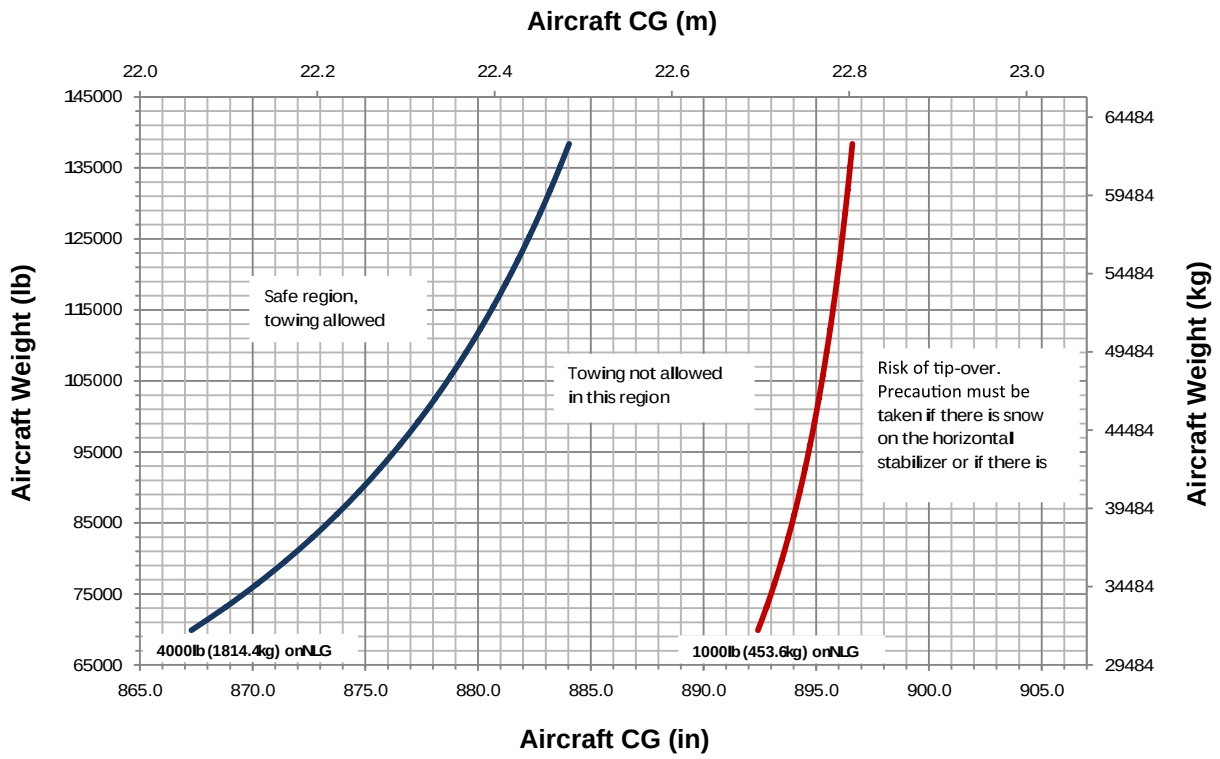

ICN-BD500-A-J085001-A-3AB48-25018-A-001-01

Figure 1 Tip-over balance limit A220-300

Fuel system - Defueling - General

Applicability: 50001-54999, 55001-59999

Table of contents

Page

Fuel system - Defueling - General 1
References 1
Description 1
1 Introduction 1
2 Fuel storage 2
3 Distribution 4
4 Indication 7
5 Defuel scenarios 10

List of tables

Page

1 References 1

List of figures

Page

1 Fuel storage - Aircraft fuel tanks 3
2 Fuel system components 5
3 Fuel vent system 6
4 Fuel quantity indicating system 8

References

Table 1 References

Data Module/Technical Publication	Title
BD500-A-J12-10-28-02AAA-221A-A	Pressure - Defuel and drain fuel
BD500-A-J12-10-28-03AAA-221A-A	Suction (no electrical power) - Defuel and drain fuel
BD500-A-J12-10-28-04AAA-221A-A	Gravity/suction using fuel tank water sump drains - Defuel and drain fuel

Description

1 Introduction

The fuel system is designed to maintain a continuous supply of fuel to the engines and the Auxiliary Power Unit (APU) in all operating conditions.

The fuel system includes the subsystems that follow:

- Storage
- Distribution
- Indication.

In an aircraft recovery situation, it may be necessary to defuel the aircraft. The different defuel scenarios are listed in this data module.

2 Fuel storage

The aircraft has three fuel tanks. Two tanks are installed in the left and right wings and an integral center tank installed on the fuselage structure.

The left and the right wing tanks have a main tank, a collector tank, and a surge tank. The main and the collector tanks are used to store the fuel. The surge tank, located at the wing tip, collects the fuel that can enter the vent system during aircraft maneuvers.

The collector tanks are partially sealed and are located inboard of each wing tank. The collector tanks contain the fuel to feed the engines.

The fuel vent system maintains air pressure inside the fuel tanks within the permitted limits by providing air flow path between the fuel tanks and the atmosphere in all operating conditions. Each fuel tank is connected to a wing surge tank through a vent pipe. Each fuel tank has the pressure relief valves to prevent too much pressure in the tank.

For more information about the fuel tank locations, refer to Fig. 1 .

For more information about aircraft fuel loads, refer to the Weight and Balance Manual.

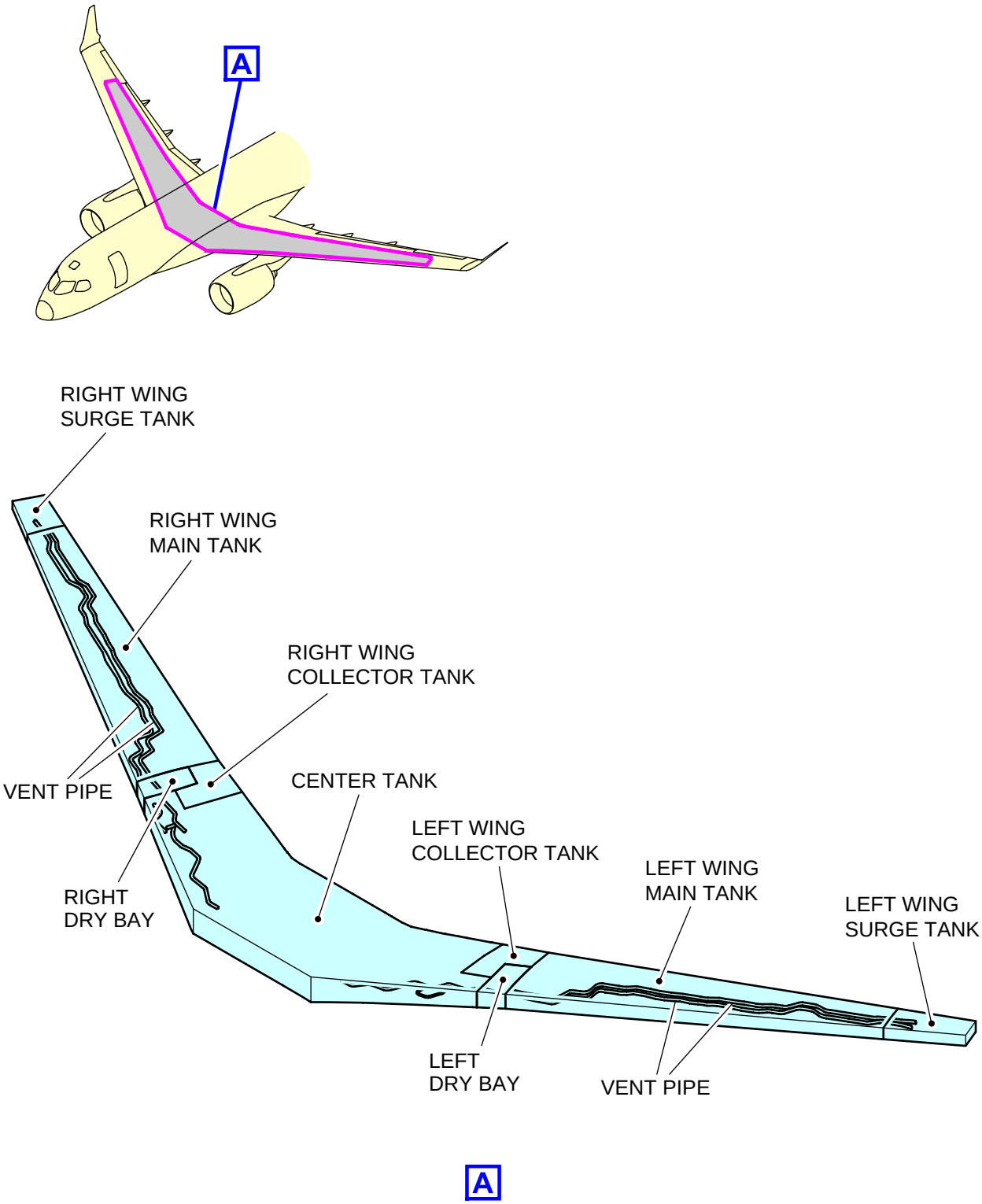

ICN-BD500-A-J281000-C-3AB48-01257-A-001-01

Figure 1 Fuel storage - Aircraft fuel tanks

3 Distribution

The distribution system supplies the fuel to operate the engines and the APU.

The fuel is supplied to each engine by the respective engine feed ejector pump which is located in the respective collector tank. The fuel is supplied to the APU from the left engine feed line.

For the information about the aircraft fuel system and its components, refer to Fig. 2 and Fig. 3 .

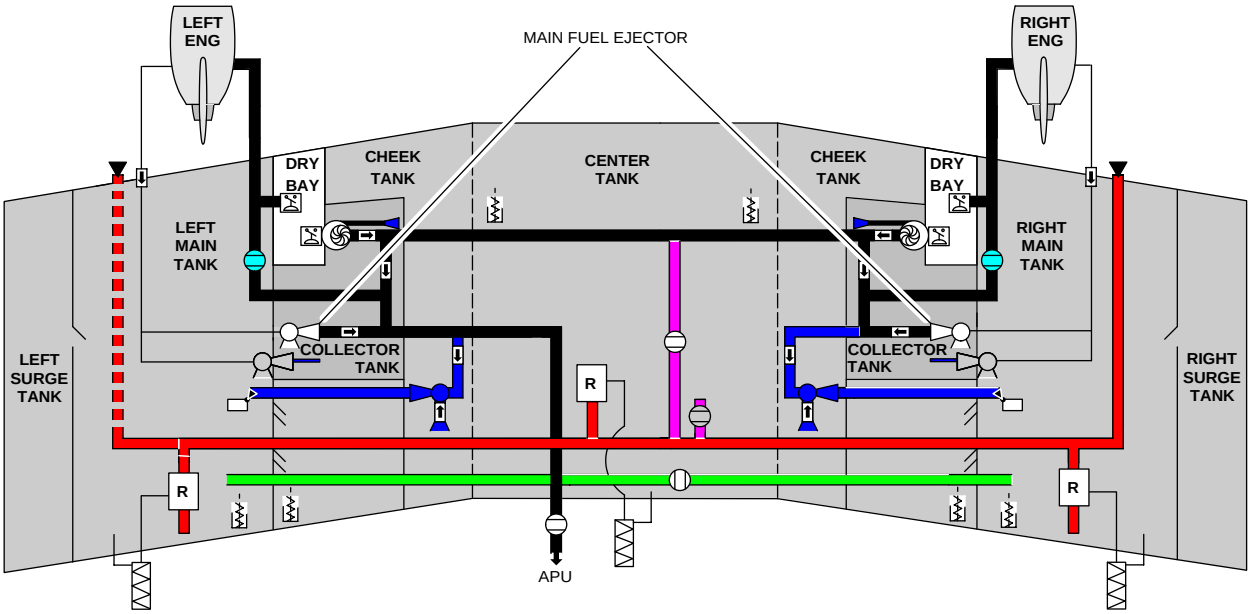

LEGEND

	Engine/APU feed.		Check valve.		Inlet screen.
	Defuel.		Transfer float valve.		Manual defueling SOV.
	Refuel/Defuel.		Engine feed ejector pump.		Refuel adapter.
	Gravity transfer.		AC boost pump.		SOV with actuator.
	Transfer/Scavenge.		Refuel control solenoid valve.		Pressure switch.
	Shutoff valve.		Water drain valve.		Transfer ejector pump.
	Flapper check valve.	R	Refuel SOV.		Scavenger ejector pump.
	Engine motive flow.		Option refuel adapter.		

ICN-BD500-A-J121028-C-3AB48-26767-A-001-01

Figure 2 Fuel system components

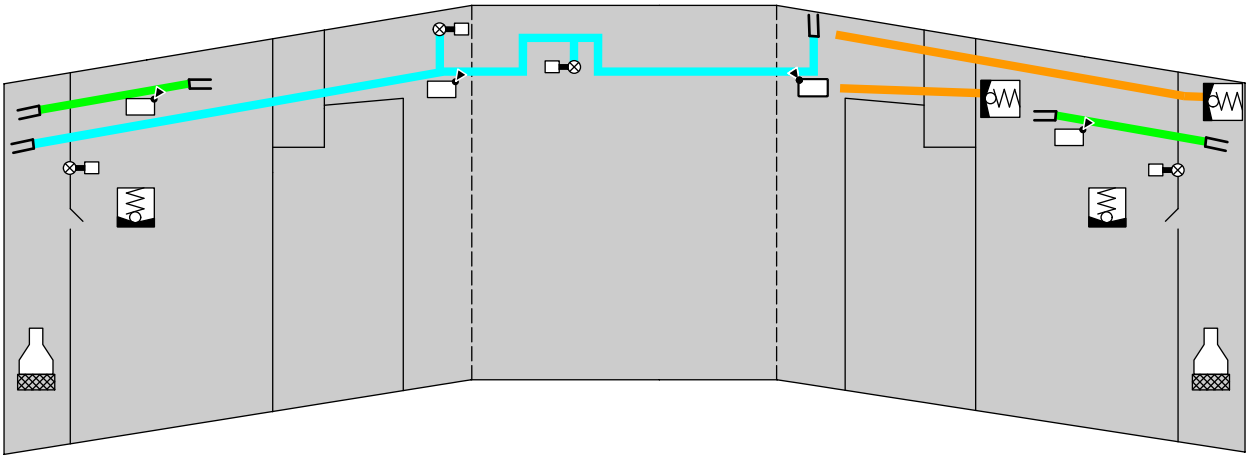

LEGEND

- Main wing tank vent.
- Center tank vent.
- Center tank backup.
- NACA Scoop.
- Flapper check valve.
- Flame arrestor.
- Float drain valve.
- Pressure relief valve.
- Float vent valve.

ICN-BD500-A-J121028-C-3AB48-26768-A-001-01

Figure 3 Fuel vent system

4 Indication

The fuel indicating system measures, monitors, and displays the quantity and temperature of the fuel in each tank. These informations are used to control the fuel transfer, refuel/defuel systems, and to provide fuel quantity and temperature data to the flight crew.

The indications of the fuel quantity indication system are shown on the fuel synoptic page and the messages on the Engine Indication and Crew Alerting System (EICAS) display.

For more information about the fuel quantity indicating system, refer to the Fig. 4 .

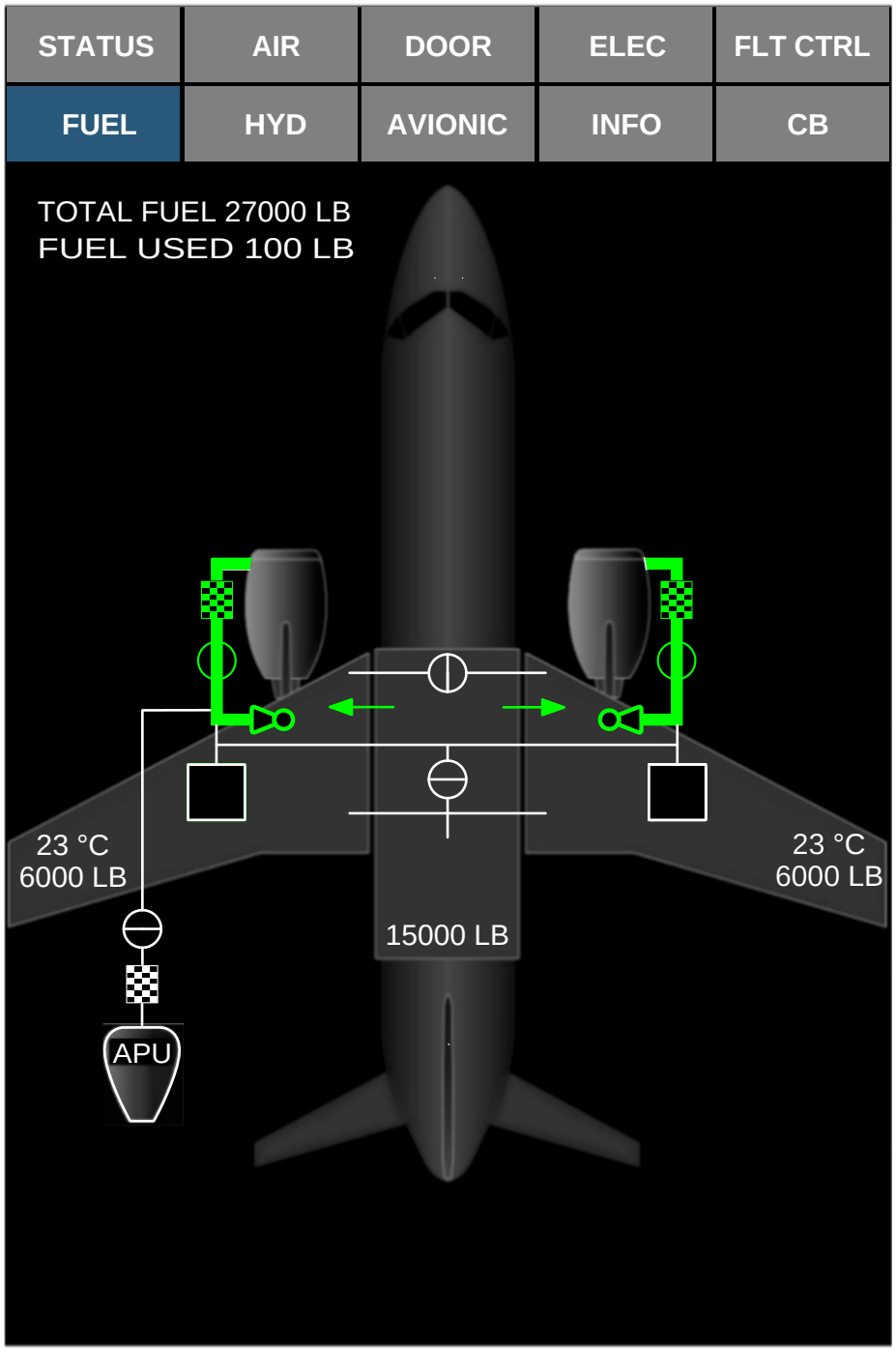

FUEL SYNOPTIC PAGE

A

ICN-BD500-A-J282000-C-3AB48-12418-A-003-01

Figure 4 Fuel quantity indicating system - (Sheet 1 of 2)

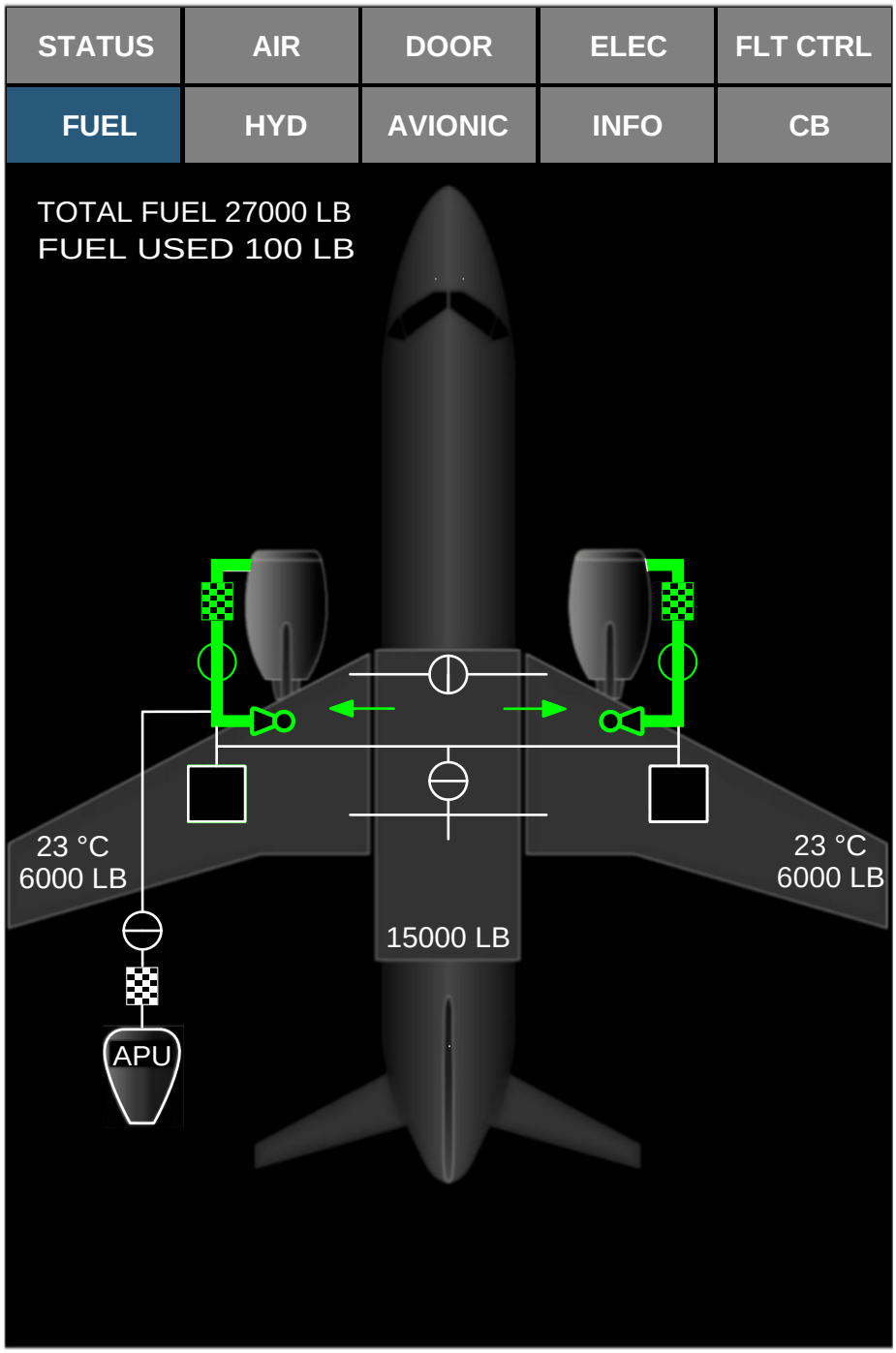

FUEL SYNOPTIC PAGE

B

ICN-BD500-A-J282000-C-3AB48-23863-A-001-01

Figure 4 Fuel quantity indicating system - (Sheet 2 of 2)

5 Defuel scenarios

There are three different scenarios related to aircraft defuelling. One of the procedures that follow may be used:

- For normal pressure defuel procedure with all the aircraft systems serviceable, refer to BD500-A-J12-10-28-02AAA-221A-A.
- For suction defuel procedures when no electrical power is available, refer to BD500-A-J12-10-28-03AAA-221A-A.
- For gravity or suction defuel procedures using the fuel tank water sump drains, refer to BD500-A-J12-10-28-04AAA-221A-A.

Pressure - Defuel and drain fuel

Applicability: 50001-54999, 55001-59999

Table of contents

Page

Pressure - Defuel and drain fuel..... 1
References..... 1
Common information..... 1
Preliminary requirements..... 2
Procedure..... 4
Requirements after job completion..... 12

List of tables

Page

1 References..... 1
2 Required conditions..... 2
3 Support equipment..... 3
4 Consumables, materials, and expendables..... 3
5 Spares..... 3
6 Required conditions..... 12

List of figures

Page

1 Pressure - Defuel and drain fuel..... 9
2 Pressure - Defuel and drain fuel..... 10
3 Pressure - Defuel and drain fuel..... 11

References

Table 1 References

Data Module/Technical Publication	Title
BD500-A-J12-10-28-01AAA-221A-A	Suction - Defuel and drain fuel
BD500-A-J24-00-00-01AAA-913G-A	Electrical/Electronic safety precautions - General maintenance safety procedure
BD500-A-J24-41-00-01AAA-561A-A	External AC power source - De-Energize electrical network
BD500-A-J24-41-00-01AAA-761A-A	External AC power source - Energize electrical network
BD500-A-J28-00-00-00AAA-913G-A	Fuel safety precautions - General maintenance safety procedure

Common information

This data module gives the procedure to do the pressure defuel and drain fuel (written as "pressure defuel" in this procedure). The pressure defuel controls are installed on the REFUEL / DEFUEL PANEL on the forward, right side of the Wing To Body Fairing (WTBF).

Preliminary requirements

Production maintenance data

Zones	192		Forward wing to fuselage fairing, right side
	212		Flight compartment, right side
	621		Slat 2, right side
Access points	192AB	Door	
	621FB	Door	

Production maintenance data

Zones	521		Slat 2, left side
Access points	521FB	Door	

Required conditions

Table 2 Required conditions

Action/Condition	Data Module/Technical publication
Make sure that the aircraft is safe for maintenance.	
Obey all the electrical/electronic safety precautions.	BD500-A-J24-00-00-01AAA-913G-A
Obey all the fuel safety precautions.	BD500-A-J28-00-00-00AAA-913G-A
Energize the electrical network with an external AC power source.	BD500-A-J24-41-00-01AAA-761A-A
Make sure that the thermal circuit breakers that follow are closed:	

Name	CB Number/Location
REFUEL VLV-CTRL B	EPC1-A2
REFUEL VLV-CTRL A	EPC1-D2

Make sure that the electronic circuit breakers that follow are IN on the circuit breaker synoptic page:

Name	CB Number/Location
L FUEL QTY	CDC1-6-3

Action/Condition	Data Module/Technical publication	
	Name	CB Number/Location
	R FUEL QTY	CDC2-8-3
Make sure that the access doors are open. Refer to the access points table above for details. Make sure that the fuel tender and the aircraft are correctly grounded.		

Support equipment

Table 3 Support equipment

Name	Identification/Reference	Quantity	Remark
Non-static container	STD-0081	AR	

Consumables, materials, and expendables

Table 4 Consumables, materials, and expendables

Name	Identification/Reference	Quantity	Remark
None			

Spares

Table 5 Spares

Name	Identification/Reference	Quantity	Remark
None			

Safety conditions

None

Procedure

WARNING

Remove the fuel system components carefully, when the aircraft is not defueled fully. This can cause unwanted fuel movement between the fuel tanks.

CAUTION

Do not operate the left (right) AC boost pump if the fuel quantity in the left (right) fuel tank is less than 900 pounds (408.24 kilograms). Turn off the AC boost pumps. If you do not do this, damage to the AC boost pumps can occur.

Note

It is structurally permitted to fully defuel a single fuel tank with the remaining available fuel in the other fuel tanks. Make sure that the aircraft conditions are as follow:

- There are no passengers, baggage, or payload on board
- Aircraft is not on jacks (when on jacks, follow aircraft jacking requirements)
- Aircraft is in a normal configuration.

You can use pressure defuel and suction defuel at the same time to defuel the wing tanks. Refer to BD500-A-J12-10-28-01AAA-221A-A for the suction defuel.

1 Do the pressure defuel as follows:

Refer to Fig. 1 and Fig. 2 .

1.1 On the REFUEL/DEFUEL PANEL, do the steps that follow:

1.1.1 Set the ON/OFF switch to ON.

1.1.2 Make sure that the MANUAL switches that follow are in the CLOSE position:

- LEFT
- CENTER
- RIGHT.

1.1.3 Set the AUTO/MANUAL switch to MANUAL.

1.1.4 Set the DEFUEL/REFUEL switch to DEFUEL.

CAUTION

Make sure that you keep the container below the work area at all times. Fuel can drain at random intervals when you do the maintenance.

1.1.5 Put the container (Commercially available, Pt. No. STD-0081) below the work area.

1.1.6 On the REFUEL/DEFUEL PANEL, do the step that follows:

1.1.6.1 Set the MANUAL switches that follow to the OPEN position:

- LEFT
- CENTER
- RIGHT.

1.2 On the REFUEL/DEFUEL PANEL display, make sure that the message DEFUEL is shown at the PRESEL portion.

WARNING

Make sure that the fuel tender and the fuel nozzle are electrically bonded to the aircraft before you refuel/defuel the aircraft. A static electric spark during the refueling/defueling can cause an explosion or fire.

1.3 Remove the cap and turn the refuel adapter knob (2) to DEFUEL position and connect the fuel tender nozzle to the right wing refuel adapter (1).

Applicability: 50010-50018, 50085, 55010-55015, 55020-55021, 55023, 55025, 55027, 55029-55030, 55032-55033, 55036, 55040, 55044-55046, 55056-55057, 55065-55067, 55072-55073, 55076, 55078-55079, 55082-55083, 55088, 55090, 55092-55093, 55097-55098, 55100, 55102-55103, 55105, 55109-55112, 55117-55119, 55122-55123, 55134, 55138-55141, 55146-55147, 55149, 55152, 55155, 55157, 55159, 55161, 55166, 55169, 55171, 55173-55174, 55179, 55185, 55187, 55190, 55193, 55196-55198, 55200, 55205, 55210, 55213, 55216, 55218, 55221, 55223, 55227, 55229-55230, 55232-55233, 55242-55243, 55253, 55269, 55275, 55278, 55281, 55283, 55288, 55290-55291, 55298-55299, 55304-55306, 55311-55312, 55324, 55327, 55330, 55332, 55338, 55340, 55346-55347, 55350, 55352-55353, 55355, 55363, 55367-55368, 55372

CAUTION

Do not operate the two refuel adapters at the same time when the left wing adapter is install. Damage to the fuel system can occur.

1.4 Make sure that the aircraft is not defuel from the left and right adapters at the same time.

Applicability: 50010-50018, 50085, 55010-55015, 55020-55021, 55023, 55025, 55027, 55029-55030, 55032-55033, 55036, 55040, 55044-55046, 55056-55057, 55065-55067, 55072-55073, 55076, 55078-55079, 55082-55083, 55088, 55090, 55092-55093, 55097-55098, 55100, 55102-55103, 55105, 55109-55112, 55117-55119, 55122-55123, 55134, 55138-55141, 55146-55147, 55149, 55152, 55155, 55157, 55159, 55161, 55166, 55169, 55171, 55173-55174, 55179, 55185, 55187, 55190, 55193, 55196-55198, 55200, 55205, 55210, 55213, 55216, 55218, 55221, 55223, 55227, 55229-55230, 55232-55233, 55242-55243, 55253, 55269, 55275, 55278, 55281, 55283, 55288, 55290-55291, 55298-55299, 55304-55306, 55311-55312, 55324, 55327, 55330, 55332, 55338, 55340, 55346-55347, 55350, 55352-55353, 55355, 55363, 55367-55368, 55372

1.5 If necessary, remove the cap and turn the refuel adapter knob (4) to DEFUEL position and connect the fuel tender nozzle to the left wing refuel adapter (3). Refer to Fig. 3 .

1.6 On the fuel control panel, do as follows:

1.6.1 Make sure that the GRAV XFR Push Button Annunciator (PBA) is pushed in.

1.6.2 Turn the L BOOST PUMP (R BOOST PUMP) switch to ON to defuel the applicable fuel tank.

Note

Defuel the wing tanks with the AC pumps operation with suction on the refuel adapter.

1.7 Drain the center tank to 400 lb (181.44 kg) as follows:

1.7.1 Drain the center tank by suction method as follows:

1.7.1.1 Open the center tank manual defuel valve.

CAUTION

Make sure that you keep the container below the work area at all times. Fuel can drain at random intervals when you do the maintenance.

1.7.1.2 Put the container (Commercially available, Pt. No. STD-0081) below the work area.

1.7.1.3 Activate the fuel truck pump in the suction mode.

Note

The maximum permitted suction pressure is −8.0 psi (−55.15 kPa) at the adapter.

1.7.1.4 On the REFUEL/DEFUEL PANEL, monitor the CENTER display window.

1.7.1.4.1 Stop the fuel truck pump when the quantity fuel is 400 lb (181.44 kg) or less.

Note

When the fuel level in a tank is almost empty, air goes into the refuel/defuel manifold by suction force. It prevents defuel operation in the center tank.

1.7.1.5 Close the center tank manual defuel valve.

1.7.2 Drain the center tank by pressure method as follows:

1.7.2.1 Transfer the fuel from the center tank to wing tanks.

1.7.2.1.1 Make sure that the wing tanks are not empty and not more than 5000 lb (2267.96 kg).

1.7.2.1.2 On the FUEL control panel, do as follows:

- Set the L BOOST PUMP switch to ON
- Set the R BOOST PUMP switch to ON.

Note

When the fuel transfer from the center wing box to the wing tank, the Transfer Float Valve (TFV) will stay open.

1.7.2.1.3 Get access to the FUEL synoptic page.

1.7.2.1.4 Make sure that the fuel quantity in the left wing tank and the right wing tank increases equally.

1.7.2.1.5 Make sure that the fuel quantity in the center tank decreases.

1.7.2.1.6 On the FUEL control panel, do as follows:

- Set the L BOOST PUMP switch to AUTO
- Set the R BOOST PUMP switch to AUTO.

1.7.3 Open the water drain valves and collect the remaining fuel in the container (Commercially available, Pt. No. STD-0081) .

1.7.4 Close the water drain valves.

1.8 Get access to the FUEL synoptic page.

1.9 If there is a boost pump low pressure indication, do as follows:

Note

The booster pumps are shown in amber color out line and the distribution lines go out of view.

1.9.1 On the fuel control panel, turn the L BOOST PUMP (R BOOST PUMP) switch to OFF to defuel the applicable fuel tank.

1.10 On the REFUEL/DEFUEL PANEL, do the steps that follow:

1.10.1 Set the MANUAL switches that follow to the CLOSE position:

- LEFT
- CENTER
- RIGHT.

1.10.2 Set the ON/OFF switch to OFF.

1.11 Disconnect the fuel tender nozzle from the refuel adapter (1) on the right wing and turn the refuel adapter knob (2) to FUEL position.

Applicability: 50010-50018, 50085, 55010-55015, 55020-55021, 55023, 55025, 55027, 55029-55030, 55032-55033, 55036, 55040, 55044-55046, 55056-55057, 55065-55067, 55072-55073, 55076, 55078-55079, 55082-55083, 55088, 55090, 55092-55093, 55097-55098, 55100, 55102-55103, 55105, 55109-55112, 55117-55119, 55122-55123, 55134, 55138-55141, 55146-55147, 55149, 55152, 55155, 55157, 55159, 55161, 55166, 55169, 55171, 55173-55174, 55179, 55185, 55187, 55190, 55193, 55196-55198, 55200, 55205, 55210, 55213, 55216, 55218, 55221, 55223, 55227, 55229-55230, 55232-55233, 55242-55243, 55253, 55269, 55275, 55278, 55281, 55283, 55288, 55290-55291, 55298-55299, 55304-55306, 55311-55312, 55324, 55327, 55330, 55332, 55338, 55340, 55346-55347, 55350, 55352-55353, 55355, 55363, 55367-55368, 55372

1.12 If necessary, disconnect the fuel tender nozzle from the refuel adapter (3) on the left wing and turn the refuel adapter knob (4) to FUEL position.

1.13 Install the cap on the refuel adapter.

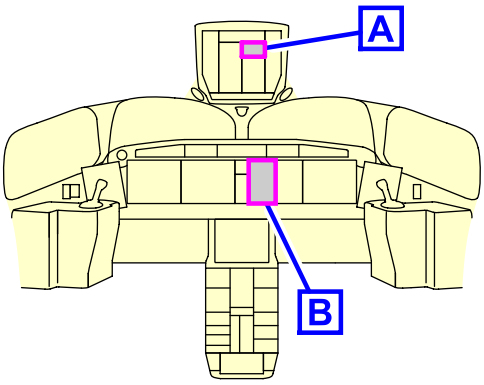

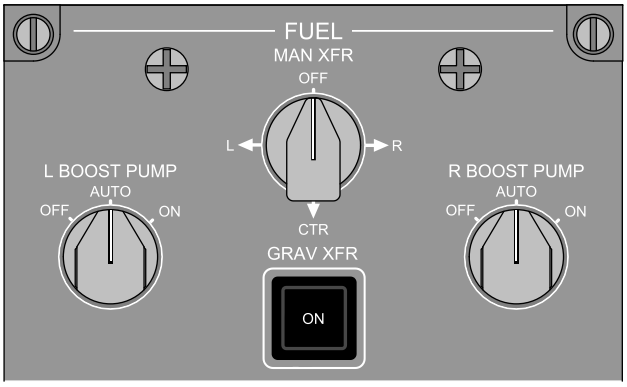

FUEL CONTROL PANEL

A

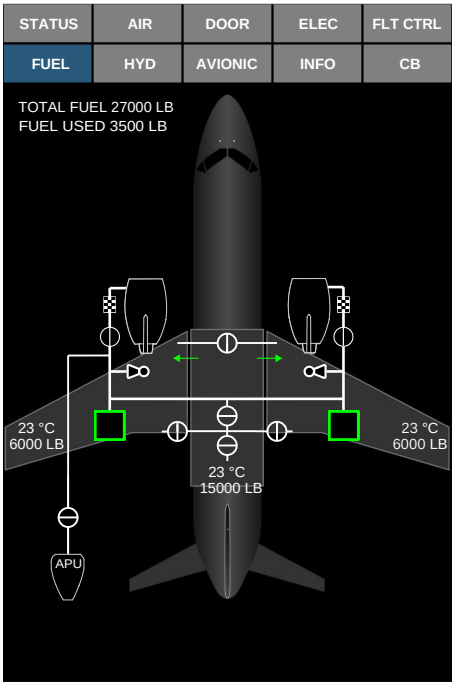

FUEL SYNOPTIC PAGE

B

ICN-BD500-A-J282200-C-3AB48-53951-A-001-01

Figure 1 Pressure - Defuel and drain fuel

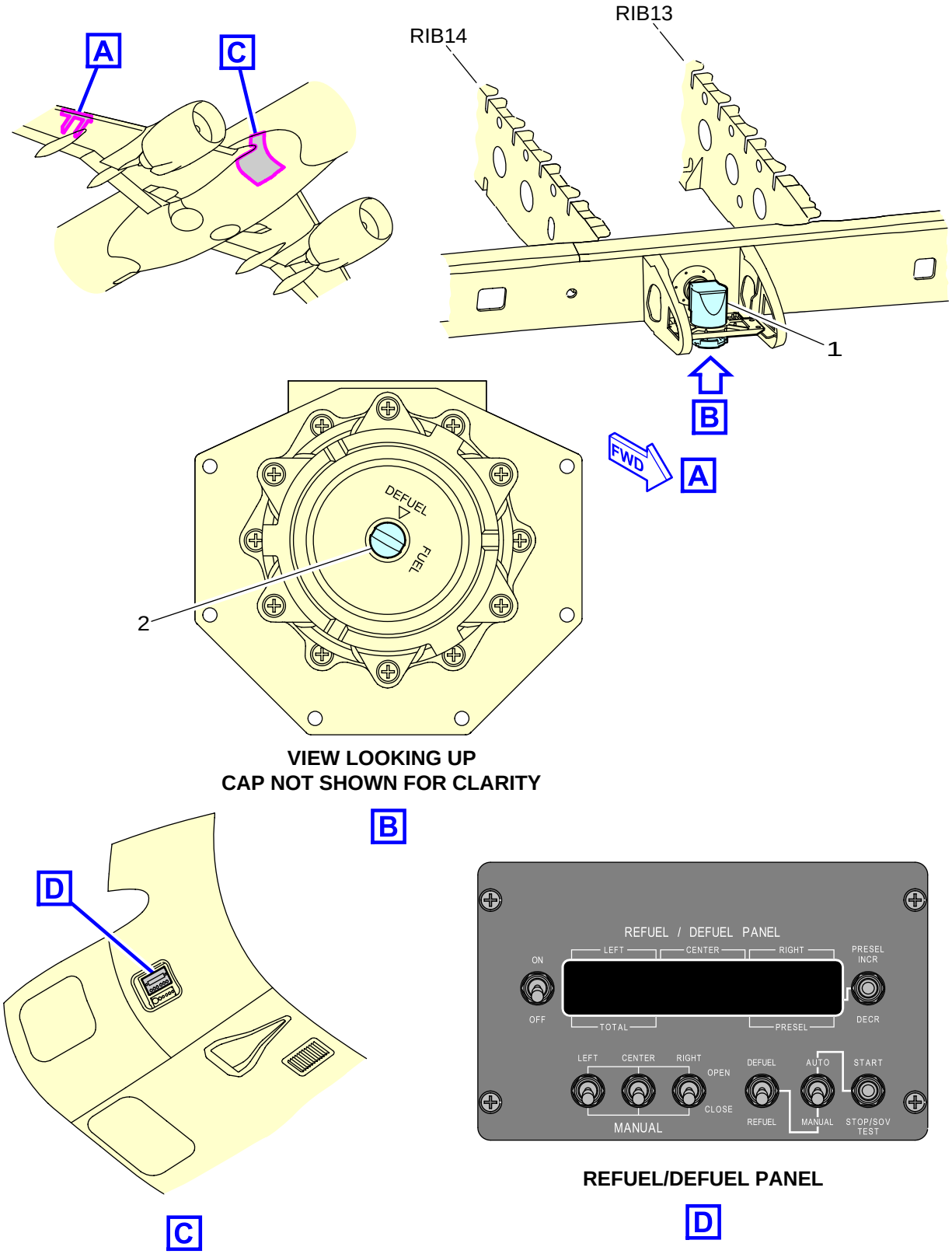

ICN-BD500-A-J121028-C-3AB48-47760-A-001-01

Figure 2 Pressure - Defuel and drain fuel

Applicability: 50010-50018, 50085, 55010-55015, 55020-55021, 55023, 55025, 55027, 55029-55030, 55032-55033, 55036, 55040, 55044-55046, 55056-55057, 55065-55067, 55072-55073, 55076, 55078-55079, 55082-55083, 55088, 55090, 55092-55093, 55097-55098, 55100, 55102-55103, 55105, 55109-55112, 55117-55119, 55122-55123, 55134, 55138-55141, 55146-55147, 55149, 55152, 55155, 55157, 55159, 55161, 55166, 55169, 55171, 55173-55174, 55179, 55185, 55187, 55190, 55193, 55196-55198, 55200, 55205, 55210, 55213, 55216, 55218, 55221, 55223, 55227, 55229-55230, 55232-55233, 55242-55243, 55253, 55269, 55275, 55278, 55281, 55283, 55288, 55290-55291, 55298-55299, 55304-55306, 55311-55312, 55324, 55327, 55330, 55332, 55338, 55340, 55346-55347, 55350, 55352-55353, 55355, 55363, 55367-55368, 55372

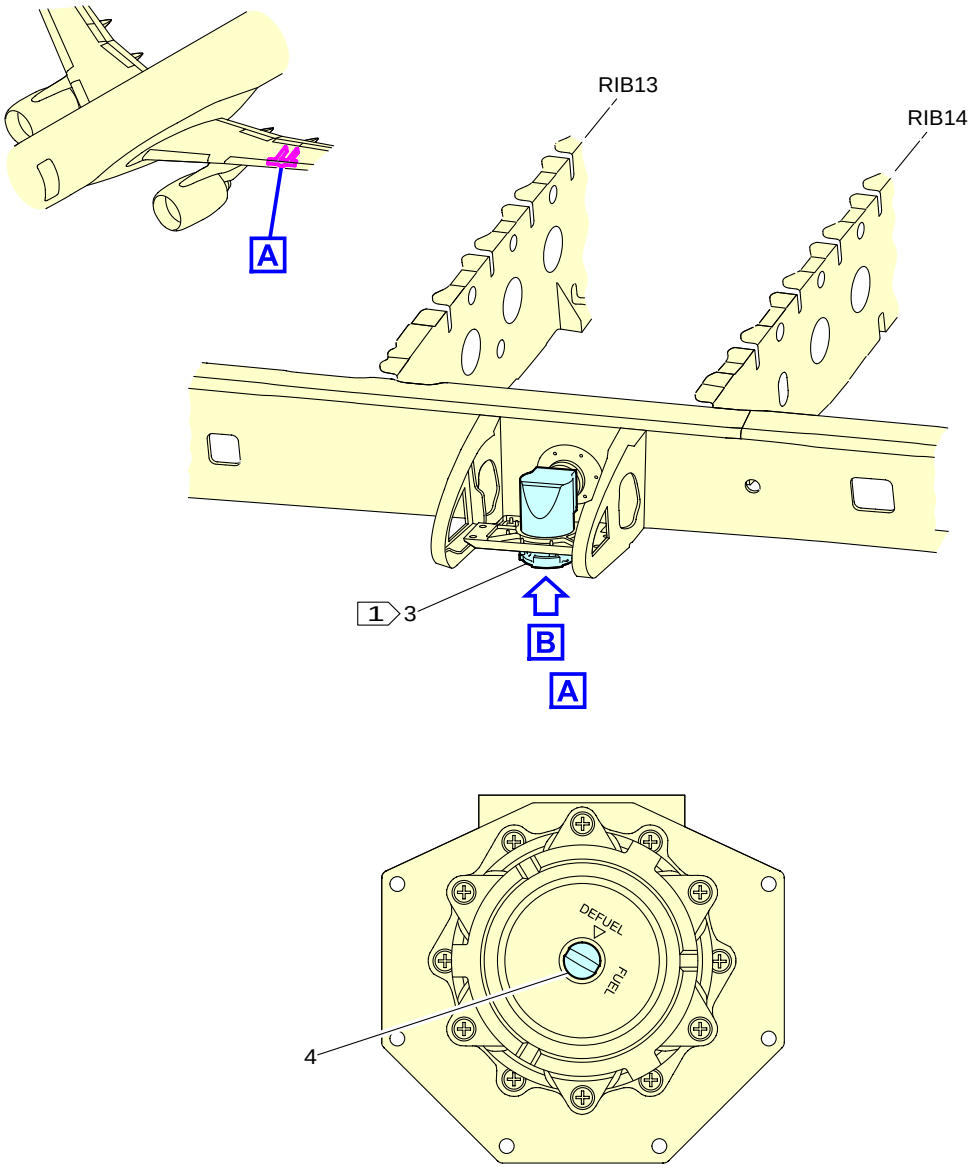

NOTE

1 Optional.

ICN-BD500-A-J121028-C-3AB48-47761-A-001-01

Figure 3 Pressure - Defuel and drain fuel

Requirements after job completion

Required conditions

Table 6 Required conditions

Action/Condition	Data Module/Technical publication
Remove all tools, equipment, and unwanted materials from the work area.	
Make sure that the fuel tender nozzle ground is disconnected from the aircraft grounding point.	
De-energize the electrical network and disconnect the external AC power source.	BD500-A-J24-41-00-01AAA-561A-A
Make sure that the access doors are closed. Refer to the access points table above for details.	

Suction (no electrical power) - Defuel and drain fuel

Applicability: 50001-54999, 55001-59999

Table of contents

Page

Suction (no electrical power) - Defuel and drain fuel..... 1
References..... 1
Common information..... 1
Preliminary requirements..... 1
Procedure..... 2
Requirements after job completion..... 3

List of tables

Page

1 References..... 1
2 Required conditions..... 1
3 Support equipment..... 2
4 Consumables, materials, and expendables..... 2
5 Spares..... 2
6 Required conditions..... 3

References

Table 1 References

Data Module/Technical Publication	Title
None	

Common information

This data module gives the information about the section defueling fuel from the aircraft without using aircraft fuel pumps. A fueling truck is needed to provide the suction for this process. Suction defueling will not remove all the fuel. The remaining fuel can be drained from the tanks through the drain valves installed at low points in the center, main, and collector tanks to allow manual fuel drainage, to remove any remaining fuel.

Preliminary requirements

Required conditions

Table 2 Required conditions

Action/Condition	Data Module/Technical publication
None	

Support equipment

Table 3 Support equipment

Name	Identification/Reference	Quantity	Remark
None			

Consumables, materials, and expendables

Table 4 Consumables, materials, and expendables

Name	Identification/Reference	Quantity	Remark
None			

Spares

Table 5 Spares

Name	Identification/Reference	Quantity	Remark
None			

Safety conditions

None

Procedure

1 Do the Suction method defueling as follow:

Note

There can be a large quantity of remaining fuel in the center tank. If it is possible, move fuel from the center tank to the main tank before you do this process.

1.1 Ground the aircraft and the defueling vehicle or suction devise.

1.2 Open the door to the Refuel/Defuel Control Panel (RDCP).

1.3 Attach bonding cables and fuel hose nozzles.

1.4 Set the ON/OFF switch to the OFF position.

1.5 Set each of the MANUAL LEFT/CENTER/RIGHT switches to the CLOSE position.

1.6 If the center fuel tank is to be defueled, the MANUAL DEFUEL valve is opened by pushing and turning the MANUAL DEFUEL LEVER, located on the aft spar of the center fuel tank.

1.7 On the pressure refuel adapter, set the REFUEL /DEFUEL selector to DEFUEL.

1.8 Set the REFUEL/DEFUEL switch to the DEFUEL position.

1.9 Set the AUTO/MANUAL switch to the MANUAL position.

1.10 Attach the hose to the refuel adapter. Start the fuel truck pump, which must be configured in the suction mode.

1.11 Fuel is suctioned out of the wing tanks.

1.12 Set the POWER SWITCH to the ON position. The PRESEL display window shows DEFUEL.

1.13 Monitor the LEFT/CENTER/RIGHT display window and stop the fuel truck pump when desired quantity is reached.

1.14 Manually close center tank MANUAL DEFUEL valve when the desired quantity in the center wing tank is reached.

1.15 Defuel the aircraft to a minimum quantity or to the quantity that you calculated.

Note

Defueling will stop when the fuel level in one of the main fuel tanks goes below the inlet suction devise. Defueling will also stop if the fuel level in the center tank goes below the inlet. A large quantity of fuel can remain in the center tank.

1.16 Set the MANUAL LEFT/RIGHT switch(es) to the CLOSE position to stop defueling in all tanks.

Requirements after job completion

Required conditions

Table 6 Required conditions

Action/Condition	Data Module/Technical publication
None	

Intentionally left blank

Leveling and lifting

Applicable to: All

Intentionally left blank

Use of jacks - Standard support equipment and tools

Applicability: 50001-54999, 55001-59999

Table of contents

Page

Use of jacks - Standard support equipment and tools..... 1
References..... 1
Description..... 1
1 General..... 1

List of tables

Page

1 References..... 1

References

Table 1 References

Data Module/Technical Publication	Title
BD500-A-J07-11-01-01AAA-172A-A	Jacking of the aircraft - Jacking

Description

1 General

This data module gives the description how to use the Jacks. For more information about jacking the aircraft, refer to BD500-A-J07-11-01-01AAA-172A-A.

Intentionally left blank

Use of pneumatic lifting bags - Standard support equipment and tools

Applicability: 50001-54999, 55001-59999

Table of contents

Page

Use of pneumatic lifting bags - Standard support equipment and tools..... 1
References..... 1
Description..... 1

List of tables

Page

1 References..... 1
2 Bearing Areas and Allowable Pressure..... 3

List of figures

Page

1 Use of pneumatic lifting bags - Standard support equipment and tools..... 4
2 Use of pneumatic lifting bags - Standard support equipment and tools..... 5

References

Table 1 References

Data Module/Technical Publication	Title
BD500-A-J07-40-00-01AAA-028A-A	Weight and center of gravity management - General
BD500-A-J07-11-01-01AAA-172A-A	Jacking of the aircraft - Jacking
BD500-A-J32-21-00-01AAA-720A-A	Nose Landing Gear (NLG) lock pin - Install procedure
BD500-A-J32-11-00-01AAA-720A-A	Main Landing Gear (MLG) lock pin - Install procedure

Description

General:

Note

It is the responsibility of the recovery manager to make the decision about the use of pneumatic bags.

CAUTION

Use pneumatic bags only as a temporary solution. When you lift the aircraft to the necessary height, if possible, replace them with jacks, stands, cradles, or cribs.

WARNING

Put safety devices, warning signs, and placards in position before you start a procedure on or near flight control surfaces and components that move. Movement of flight control components can cause injury to persons and/or damage to equipment.

There are two types of common pneumatic lifting bags usually used for the recovery operations, which are as follows:

- Single-element pneumatic lifting bags (balloon bags)
- multiple-element pneumatic lifting bags.

Single-element pneumatic lifting bags (balloon bags) are usually not recommended as the floating loads are possible which makes the aircraft unstable.

Multiple-element pneumatic lifting bags with internal threads are recommended which gives the following benefits:

- Prevents the expansion of the individual element. This gives the flat slab shape of constant thickness.
- Inherently gives some degree of lateral stability.
- Let the upper elements of the bag to collect the contour.

Before installation of the pneumatic bags, do the steps as follows:

1. Obey the related manufacturer instructions to operate the pneumatic lifting bags.
2. Make sure that the personnel has sufficient knowledge about bags and approved to operate.
3. Calculate the weight and loads on the aircraft. Refer to BD500-A-J07-40-00-01AAA-028A-A.
4. Select the bag of the sufficient capacity to lift the aircraft at necessary height.
5. Do a structural analysis of the aircraft and put the lifting bags away from the damaged area.
6. Test the soil stability to keep the bags on the stable ground. If the soil is not stable, excavate the area to a depth and fill with gravels, rocks to form the strong base with the stable soil. Usually assembled cribbing platform used for this purpose.
7. Always tether and jack the aircraft when pneumatic lifting bag is used.

- For jacking, refer to BD500-A-J07-11-01-01AAA-172A-A.

8. Install landing gear down-lock pin for Nose Landing Gear (NLG) and Main Landing Gear (MLG).

- If NLG, Refer to BD500-A-J32-21-00-01AAA-720A-A.

- If MLG, Refer to BD500-A-J32-11-00-01AAA-720A-A.

9. Usually pneumatic lifting bags are not stable for the horizontal forces, so do not use the bags in the gusty conditions. Refer to the related bag manufacturer instructions to know the limits of the pneumatic lifting bags in wind speed.
10. Remove some unwanted items like antennas and drain masts from the aircraft before you install the pneumatic lifting bags.

Use of pneumatic lifting bags on wings:

CAUTIONS

- **Make sure that you add sufficient supports to the aircraft to hold the weight of the aircraft. To prevent damage or injury, the bags can suddenly break (open) and damage to aircraft can occur.**

- **Make sure that the pneumatic lifting bags apply loads in the specified locations only. If the lifting bags apply loads out of these locations, a secondary damage can occur.**

- **Make sure that the loads on the airframe are less than the allowable loads when you use supports. The supports apply loads that do not occur in normal operation.**

The bags can be placed under the both wings.

Make sure that the bags will not push the flaps and other control surfaces.

Adjust the air bags support to follow the shape of the lower wing and body surfaces. The bags must be flexible to the movement of the airplane.

If the height of the inflated bag is not sufficient, it is necessary to make a platform with height. It is possible to make this platform with timber or to use an inflatable type platform. Usually, cribbing platform is used.

Do not put the bags in contact with the sharp or protruding areas which can cause the damage to the bags. Put a layer of plywood 1 in. (25 mm) thick below the air bags. Put a cover (tarpaulin) or foam rubber mattress between the aircraft skin and the bags.

Note

BE CAREFUL WHEN YOU USE FOAM BETWEEN THE AIRPLANE AND THE PNEUMATIC BAGS. THE BAGS CAN PUT LARGE HORIZONTAL LOADS INTO THE FOAM. THESE LOADS CAN TWIST OR BREAK THE FOAM BLOCK OR THE BAG THAT HOLDS THE FOAM.

If possible, bags must be installed with the inflation fittings points forward.

The bags can be installed on the wing from the RIB 3 to RIB 22. In between these RIBS, there are specific locations to keep the bags

- Keep the bags under the wing. Refer to Table 2 and Fig. 1 .

- Do not keep the bags under the wing. Refer to Table 2 and Fig. 2 .

Table 2 Bearing Areas and Allowable Pressure

From Rib	To Rib	Maximum Allowable Pressure (Psi)
3	7	5
9	17	2.4
19	22	2.4

Each lift operator must speak with the recovery manager and/or with console operators during all phases of the operation.

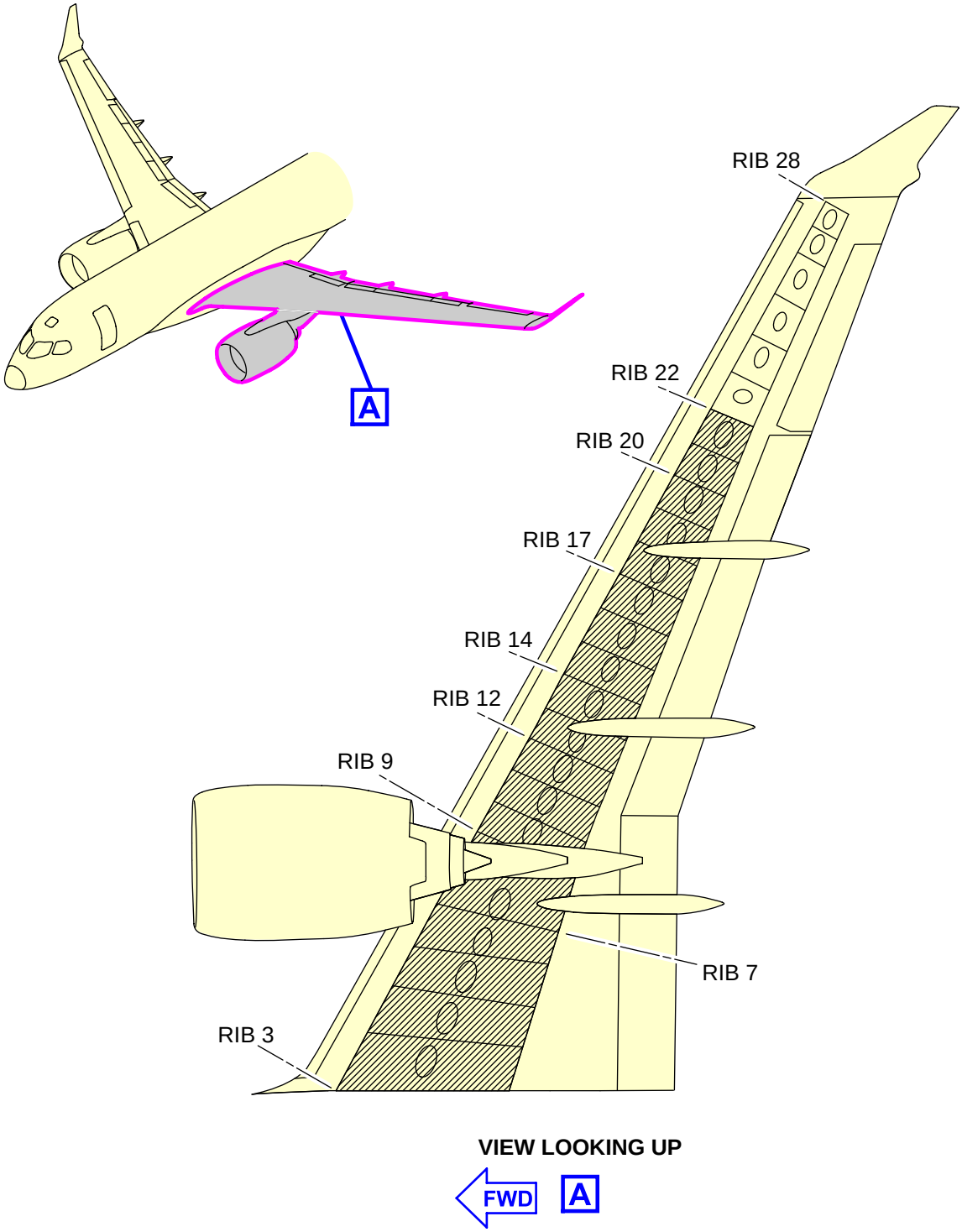

LEGEND

Bearing area on wing lower surface.

ICN-BD500-A-J071200-C-3AB48-43167-A-001-01

Figure 1 Use of pneumatic lifting bags - Standard support equipment and tools

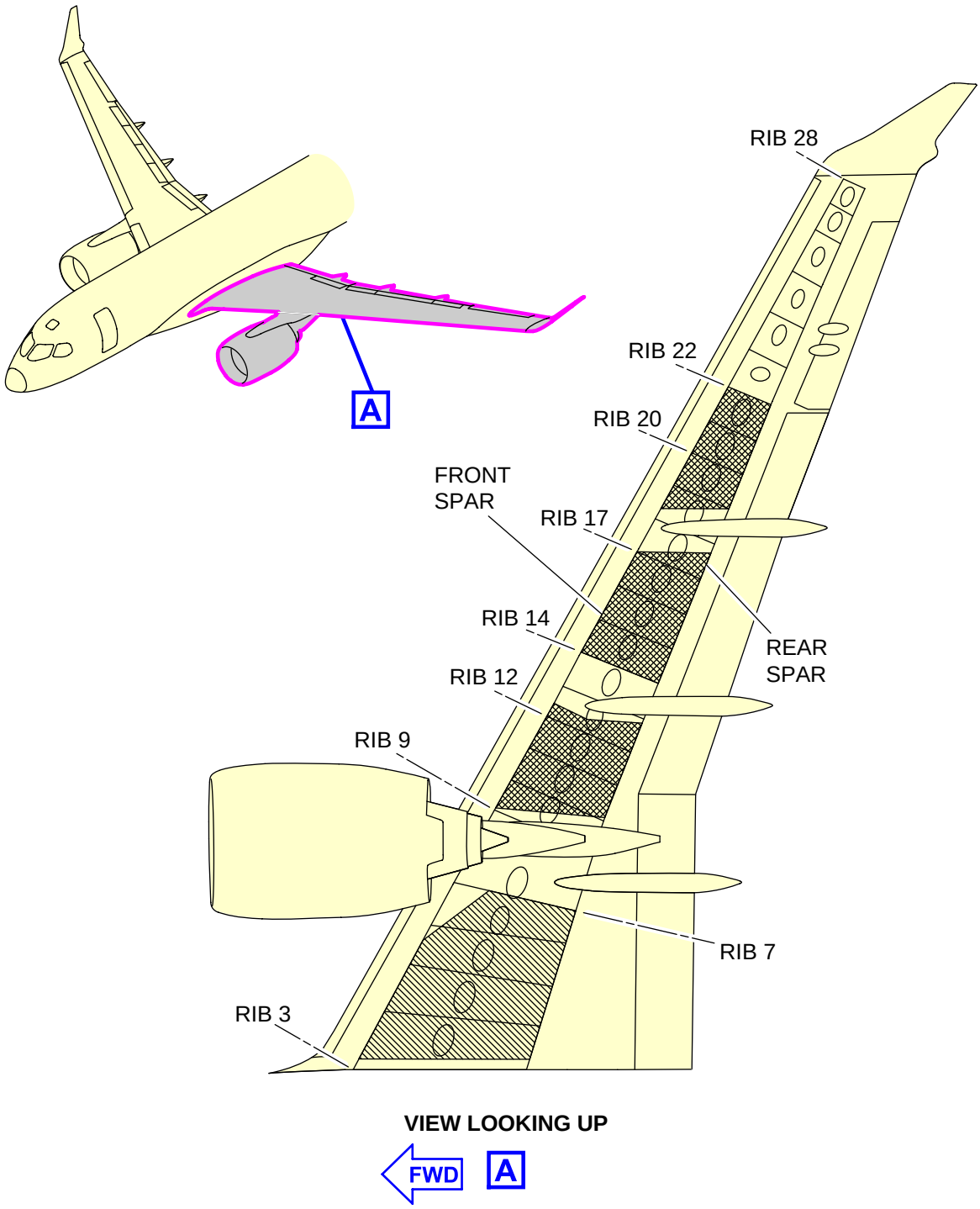

LEGEND

Bearing area on wing lower surface is 2.40 pounds per squre inch.

Bearing area on wing lower surface is 5.00 pounds per squre inch.

ICN-BD500-A-J071200-C-3AB48-43168-A-001-01

Figure 2 Use of pneumatic lifting bags - Standard support equipment and tools

Intentionally left blank

A220

Aircraft with nose landing gear retracted, collapsed, or missing - Lifting

Applicability: 50001-54999, 55001-59999

Table of contents

Page

Aircraft with nose landing gear retracted, collapsed, or missing - Lifting..... 1
References..... 1
Common information..... 1
Preliminary requirements..... 2
Procedure..... 3
Requirements after job completion..... 6

List of tables

Page

1 References..... 1
2 Required conditions..... 2
3 Support equipment..... 2
4 Consumables, materials, and expendables..... 2
5 Spares..... 3
6 Required conditions..... 6

List of figures

Page

1 Aircraft with nose landing gear retracted, collapsed, or missing - Lifting..... 5

References

Table 1 References

Data Module/Technical Publication	Title
BD500-A-J07-10-00-00AAA-062A-A	Use of jacks - Standard support equipment and tools
BD500-A-J07-12-00-00AAA-062A-A	Use of pneumatic lifting bags - Standard support equipment and tools
BD500-A-J07-30-00-00AAA-062A-A	Use of cranes - Standard support equipment and tools

Common information

This data module gives the recovery procedure for the aircraft with Nose Landing Gear (NLG) retracted, collapsed, or missing.

Preliminary requirements

Required conditions

Table 2 Required conditions

Action/Condition	Data Module/Technical publication
Make sure that the aircraft is in level attitude.	
Make sure that the maximum fuel is removed to obey with the weight and balance problems and maximum possible lifting loads.	
Make sure that the weight and balance is calculated.	
Make sure that the tail tip protection is given.	
Make sure that the aircraft rest on the forward lower fuselage with both the engine nose cowls touch the ground.	

Support equipment

Table 3 Support equipment

Name	Identification/Reference	Quantity	Remark
None			

Consumables, materials, and expendables

Table 4 Consumables, materials, and expendables

Name	Identification/Reference	Quantity	Remark
None			

Spares

Table 5 Spares

Name	Identification/Reference	Quantity	Remark
None			

Safety conditions

None

Procedure

CAUTION

You must do the lateral leveling before you do the longitudinal leveling.

1 Recovery procedure

Refer to Fig. 1 .

There can be 6 in. (152.40 mm) possible crush damage to the forward lower fuselage and the engine nose cowls.

1.1 Level the aircraft along the longitudinal axis:

1.1.1 Level the aircraft with the slings as follows:

Refer to BD500-A-J07-30-00-00AAA-062A-A.

1.1.1.1 Use a load balancing sling assembly.

1.1.1.2 If necessary, Remove the different antenna.

1.1.1.3 Lift the aircraft to the height, necessary to extend the NLG.

1.1.1.4 Lift the aircraft to the height, necessary to install the nose towing dolly with a turntable and the support trailer .

1.1.2 Level the aircraft with the pneumatic bags as follows:

Refer to BD500-A-J07-12-00-00AAA-062A-A.

Note

You must put the aircraft on the jack or the shore the aircraft after it is lifted to sufficient height.

Note

If the pneumatic bags cover the wing jack point, it is necessary to move the aircraft before you start the work on the landing gear.

1.1.2.1 Install the pneumatic bags below the forward fuselage.

1.1.2.2 Monitor the maximum skin pressure.

1.1.2.3 If necessary, remove the different antenna.

1.1.2.4 Lift the aircraft to the height, necessary to extend the NLG.

1.1.2.5 Lift the aircraft to the height, necessary to install the nose towing dolly with a turntable and the support trailer below the forward fuselage.

1.1.3 Level the aircraft with the jack as follows:

Refer to BD500-A-J07-10-00-00AAA-062A-A.

Note

You must put the aircraft on jack after the aircraft lifted to sufficient height.

1.1.3.1 Install the jack that can follow the arc movement when the fuselage is in height.

1.1.3.2 Lift the aircraft to the height, necessary to extend the NLG.

1.1.3.3 Lift the aircraft to the height, necessary to install the nose towing dolly with a turntable and the support trailer below the forward fuselage.

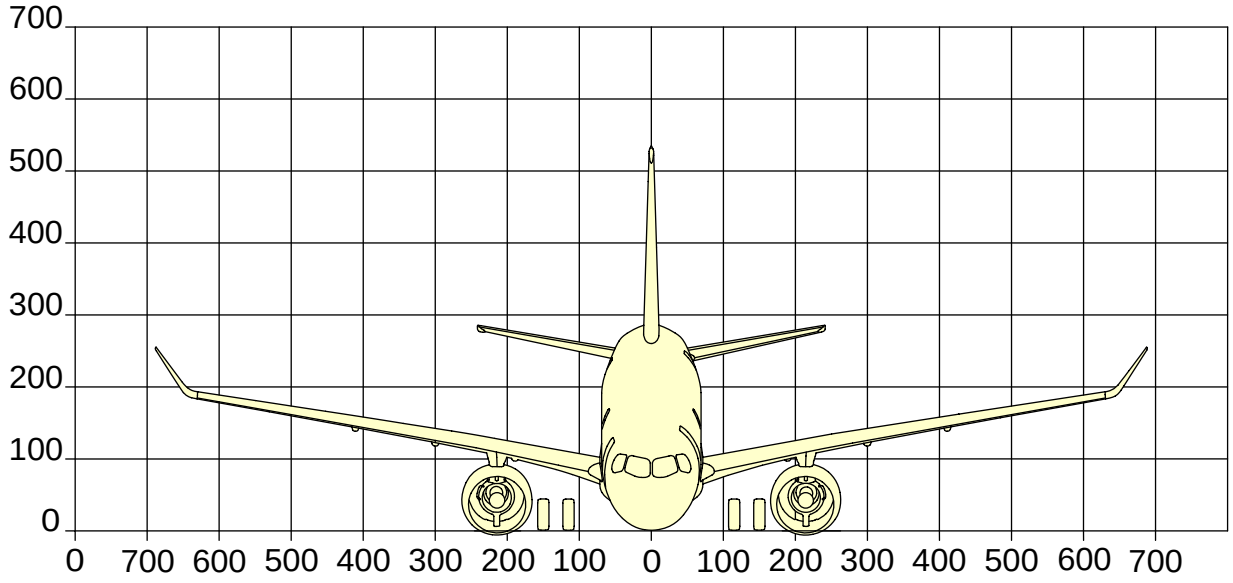

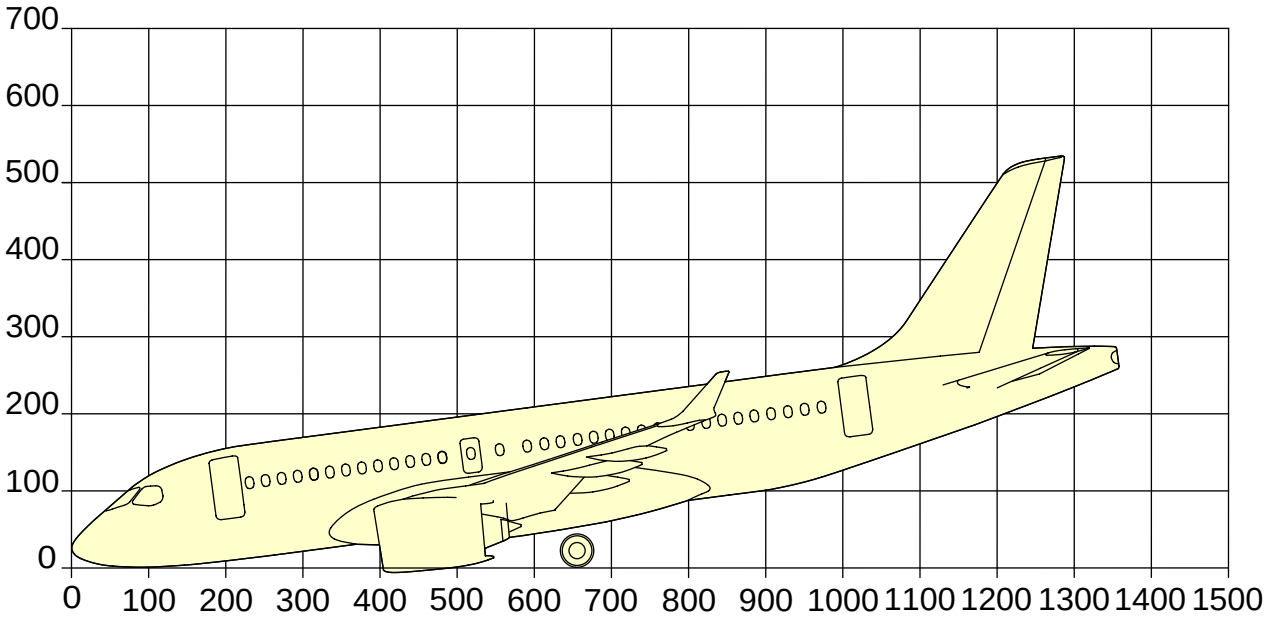

NOTE

1 square equals to 100 inches.

ICN-BD500-A-J071200-C-3AB48-30093-A-001-01

Figure 1 Aircraft with nose landing gear retracted, collapsed, or missing - Lifting

Requirements after job completion

Required conditions

Table 6 Required conditions

Action/Condition	Data Module/Technical publication
Make sure that the aircraft is back to the hard surface or repair section.	
Record all the paperwork including procedures to recover the aircraft, loads applied, list of removed parts, and other requirements.	
This data must give to the inspection or repair section to help the aircraft return to service.	

Aircraft with nose landing gear retracted, collapsed, or missing with one or both engines missing - Lifting

Applicability: 50001-54999, 55001-59999

Table of contents

Page

Aircraft with nose landing gear retracted, collapsed, or missing with one or both engines missing - Lifting..... 1
References..... 1
Common information..... 1
Preliminary requirements..... 2
Procedure..... 3
Requirements after job completion..... 6

List of tables

Page

1 References..... 1
2 Required conditions..... 2
3 Support equipment..... 2
4 Consumables, materials, and expendables..... 2
5 Spares..... 3
6 Required conditions..... 6

List of figures

Page

1 Aircraft with nose landing gear retracted, collapsed, or missing with one or both engines missing - Lifting..... 5

References

Table 1 References

Data Module/Technical Publication	Title
BD500-A-J07-10-00-00AAA-062A-A	Use of jacks - Standard support equipment and tools
BD500-A-J07-12-00-00AAA-062A-A	Use of pneumatic lifting bags - Standard support equipment and tools
BD500-A-J07-30-00-00AAA-062A-A	Use of cranes - Standard support equipment and tools

Common information

This data module gives the recovery procedure for the aircraft with Nose Landing Gear (NLG) retracted, collapsed, or missing with the one or both engines missing.

Preliminary requirements

Required conditions

Table 2 Required conditions

Action/Condition	Data Module/Technical publication
Make sure that the aircraft is in level attitude.	
Make sure that the maximum fuel is removed to obey with the weight and balance problems and maximum possible lifting loads.	
Make sure that the weight and balance is calculated for the missing engine/engines.	
Make sure that the tail tip protection is given.	
Make sure that the aircraft rest on the forward lower fuselage. With one engine missing, the opposite engine nose cowl can touch the ground.	

Support equipment

Table 3 Support equipment

Name	Identification/Reference	Quantity	Remark
None			

Consumables, materials, and expendables

Table 4 Consumables, materials, and expendables

Name	Identification/Reference	Quantity	Remark
None			

Spares

Table 5 Spares

Name	Identification/Reference	Quantity	Remark
None			

Safety conditions

None

Procedure

CAUTION

You must do the lateral leveling before you do the longitudinal leveling.

1 Recovery procedure

1.1 Level and lift the aircraft along the longitudinal axis as follows:
Refer to Fig. 1 .

1.1.1 Level and lift the aircraft with the slings as follows:
Refer to BD500-A-J07-30-00-00AAA-062A-A.

1.1.1.1 Use a load balancing sling assembly.

1.1.1.2 If necessary, Remove the different antenna.

1.1.1.3 Lift the aircraft to the height, necessary to extend the NLG.

1.1.1.4 Lift the aircraft to the height, necessary to install the nose towing dolly with a turntable.

1.1.2 Level and lift the aircraft with the pneumatic bags as follows:
Refer to BD500-A-J07-12-00-00AAA-062A-A.

1.1.2.1 Install the pneumatic bags below the forward fuselage.

1.1.2.2 Monitor the maximum skin pressure.

1.1.2.3 If necessary, Remove the different antenna.

1.1.2.4 Lift the aircraft to the height, necessary to extend the NLG.

1.1.2.5 Lift the aircraft to the height, necessary to install the nose towing dolly with a turntable.

1.1.3 Level and lift the aircraft with the jack as follows:
Refer to BD500-A-J07-10-00-00AAA-062A-A.

1.1.3.1 Install the jack that can follow the arc movement when the fuselage is in height.

1.1.3.2 Lift the aircraft to the height, necessary to extend the NLG.

1.1.3.3 Lift the aircraft to the height, necessary to install the nose towing dolly with a turntable.

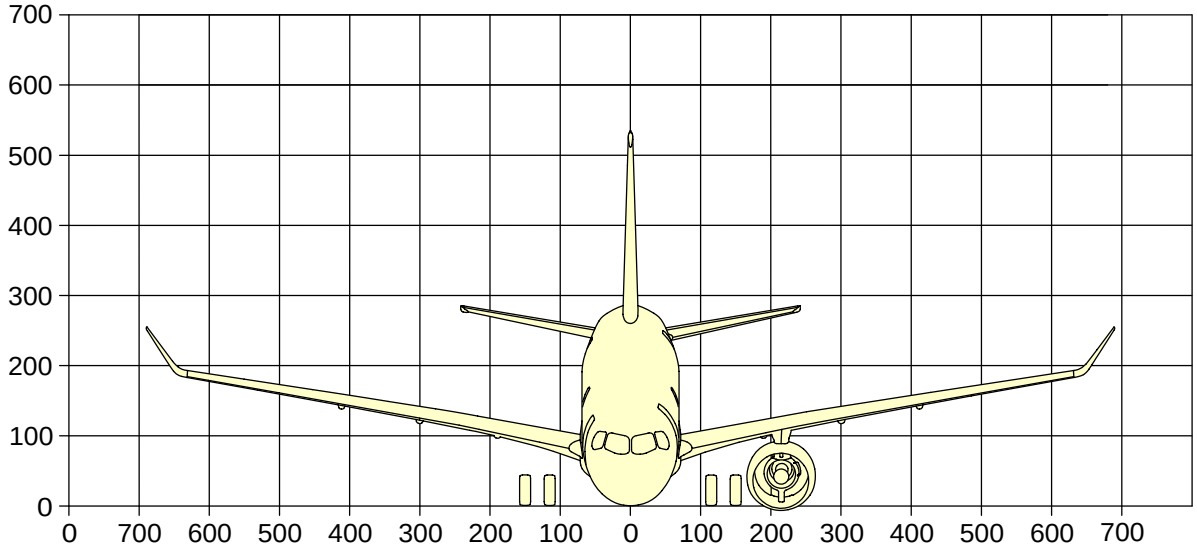

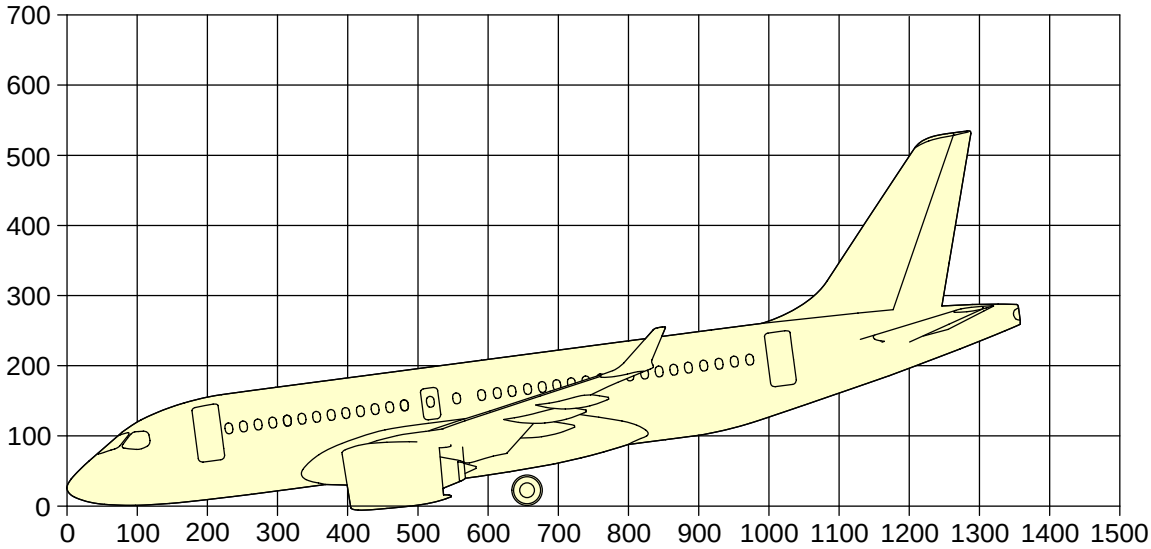

NOTE

1 square equals to 100 inches.

ICN-BD500-A-J071200-C-3AB48-30253-A-001-01

Figure 1 Aircraft with nose landing gear retracted, collapsed, or missing with one or both engines missing - Lifting

Requirements after job completion

Required conditions

Table 6 Required conditions

Action/Condition	Data Module/Technical publication
Make sure that the aircraft is back to the hard surface or repair section.	
Record all the paperwork including procedures to recover the aircraft, loads applied, list of removed parts, and other requirements.	
This data must give to the inspection or repair section to help the aircraft return to service.	

Aircraft with nose landing gear and one main landing gear collapsed, missing or retracted - Lifting

Applicability: 50001-54999, 55001-59999

Table of contents

Page

Aircraft with nose landing gear and one main landing gear collapsed, missing or retracted - Lifting..... 1
References..... 1
Common information..... 1
Preliminary requirements..... 2
Procedure..... 3
Requirements after job completion..... 7

List of tables

Page

1 References..... 1
2 Required conditions..... 2
3 Support equipment..... 2
4 Consumables, materials, and expendables..... 2
5 Spares..... 3
6 Required conditions..... 7

List of figures

Page

1 Aircraft with nose landing gear and one main landing gear collapsed, missing, or retracted - Lifting..... 6

References

Table 1 References

Data Module/Technical Publication	Title
BD500-A-J07-10-00-00AAA-062A-A	Use of jacks - Standard support equipment and tools
BD500-A-J07-12-00-00AAA-062A-A	Use of pneumatic lifting bags - Standard support equipment and tools
BD500-A-J07-30-00-00AAA-062A-A	Use of cranes - Standard support equipment and tools

Common information

This data module gives the recovery procedure for the aircraft with Nose Landing Gear (NLG) collapsed, missing or retracted and one Main Landing Gear (MLG) collapsed, missing or retracted.

Preliminary requirements

Required conditions

Table 2 Required conditions

Action/Condition	Data Module/Technical publication
Make sure that the aircraft is in level attitude.	
Make sure that the maximum fuel is removed to obey with the weight and balance problems and maximum possible lifting loads.	
Make sure that the weight and balance is calculated.	
Make sure that the tail tip protection is given.	
Make sure that the aircraft rest on the engine of the wing with the failed landing gear.	

Support equipment

Table 3 Support equipment

Name	Identification/Reference	Quantity	Remark
None			

Consumables, materials, and expendables

Table 4 Consumables, materials, and expendables

Name	Identification/Reference	Quantity	Remark
None			

Spares

Table 5 Spares

Name	Identification/Reference	Quantity	Remark
None			

Safety conditions

None

Procedure

CAUTION

You must do the lateral leveling before you do the longitudinal leveling.

1 Recovery procedure

There can be 6 in. (152.40 mm) possible crush damage to the forward fuselage and the engine nose cowl on the defective MLG side.

Refer to Fig. 1 .

1.1 Level the aircraft along the lateral axis as follows:

1.1.1 Level the aircraft with the pneumatic bags as follows:

Refer to BD500-A-J07-12-00-00AAA-062A-A.

Note

You must put the aircraft on the jack or the shore the aircraft after it is lifted to sufficient height.

Note

If the pneumatic bags cover the wing jack point, it is necessary to move the aircraft before you start the work on the landing gear.

Note

The skin pressure must not exceed 5 psi (34.47 kPa).

1.1.1.1 Install the pneumatic bags between the RIB3 and RIB9 below each wing.

1.1.1.2 Level the aircraft along the lateral axis.

1.1.2 Level the aircraft with the jack as follows:

Refer to BD500-A-J07-10-00-00AAA-062A-A.

Note

You must put the aircraft on jack after the aircraft lifted to sufficient height.

1.1.2.1 Install the jacks below each wing.

1.1.2.2 Level the aircraft along the lateral axis.

1.1.3 You can also level the aircraft from the engine pylon before the removal of air bags to give access to the wing jack point.

Note

The pylon must be examined to make sure that it can hold the possible lifting loads.

1.2 Level the aircraft along the longitudinal axis as follows:

1.2.1 Level the aircraft with the slings as follows:

Refer to BD500-A-J07-30-00-00AAA-062A-A.

1.2.1.1 Use a load balancing sling assembly.

1.2.1.2 If necessary, Remove the different antenna.

1.2.1.3 Lift the aircraft to the height, necessary to extend the landing gear.

1.2.1.4 Lift the aircraft to the height, necessary to install the nose towing dolly with a turntable and the support trailer below the wing.

1.2.2 Level the aircraft with the pneumatic bags as follows:

Refer to BD500-A-J07-12-00-00AAA-062A-A.

Note

You must put the aircraft on the jack or the shore the aircraft after it is lifted to sufficient height.

Note

If the pneumatic bags cover the wing jack point, it is necessary to move the aircraft before you start the work on the landing gear.

Note

The fuselage skin pressure must not exceed 5 psi (34.47 kPa).

1.2.2.1 Install the pneumatic bags below the forward fuselage.

1.2.2.2 Monitor the maximum skin pressure.

1.2.2.3 If necessary, Remove the different antenna.

1.2.2.4 Lift the aircraft to the height, necessary to extend the landing gear.

1.2.2.5 Lift the aircraft to the height, necessary to install the nose towing dolly with a turntable and the support trailer below the wing.

1.2.3 Level the aircraft with the jack as follows:
Refer to BD500-A-J07-10-00-00AAA-062A-A.

Note
You must put the aircraft on jack after the aircraft lifted to sufficient height.

1.2.3.1 Install the jacks below the forward fuselage.

1.2.3.2 Lift the aircraft to the height, necessary to extend the landing gear.

1.2.3.3 Lift the aircraft to the height, necessary to install the nose towing dolly with a turntable and the support trailer below the wing.

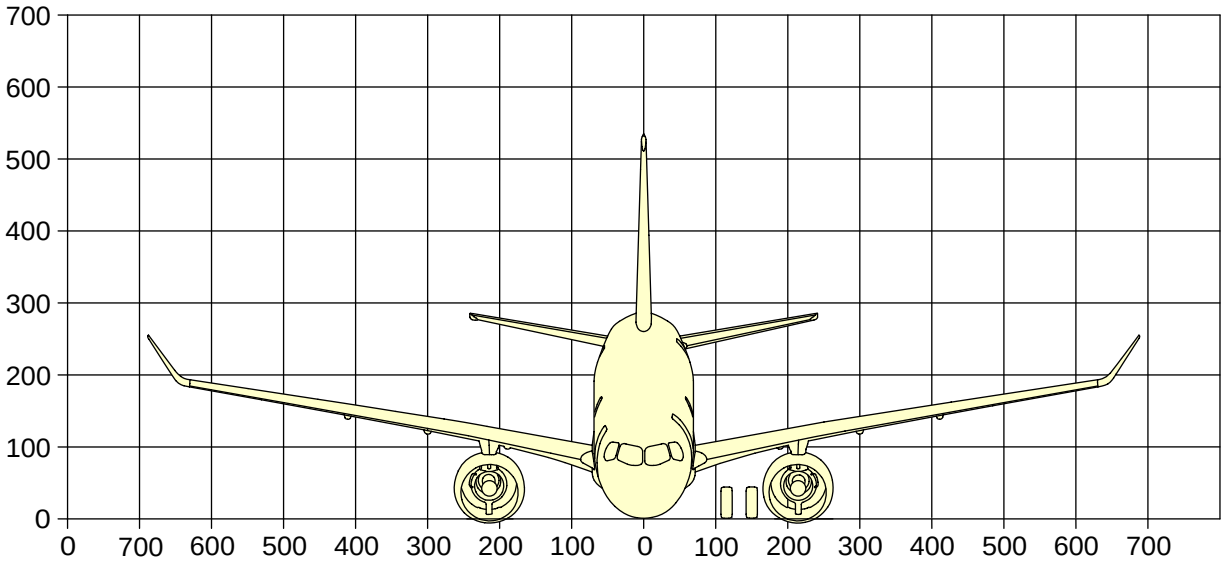

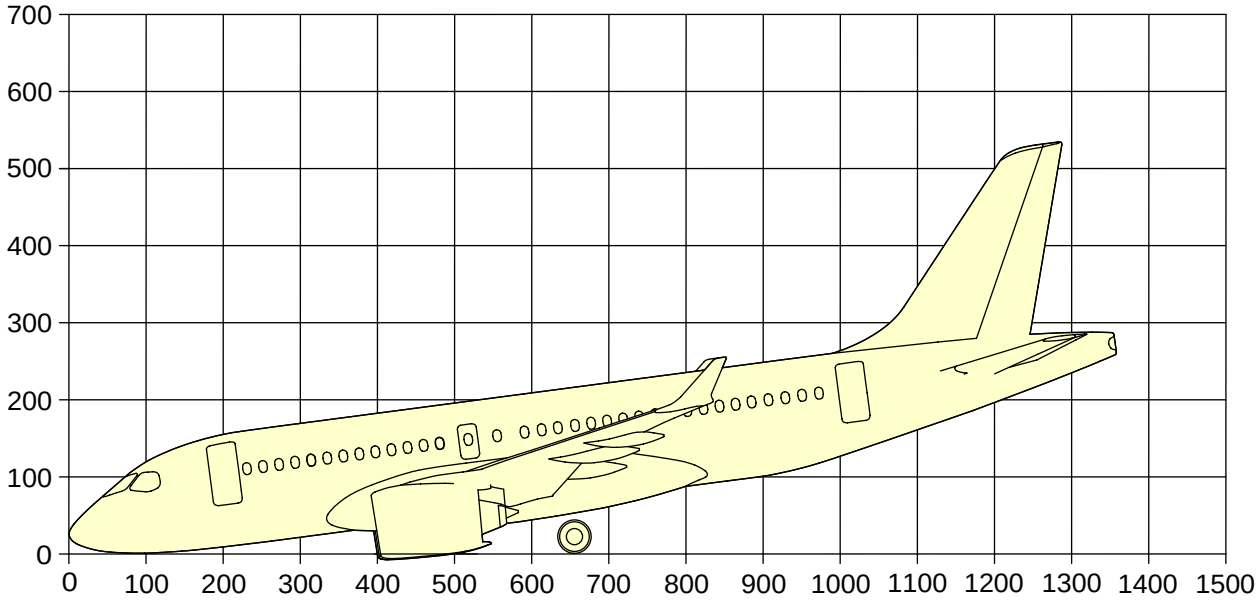

NOTE

1 square equals to 100 inches.

ICN-BD500-A-J071200-C-3AB48-30284-A-001-01

Figure 1 Aircraft with nose landing gear and one main landing gear collapsed, missing, or retracted - Lifting

Requirements after job completion

Required conditions

Table 6 Required conditions

Action/Condition	Data Module/Technical publication
Make sure that the aircraft is back to the hard surface or repair section.	
Record all the paperwork including procedures to recover the aircraft, loads applied, list of removed parts, and other requirements.	
This data must give to the inspection or repair section to help the aircraft return to service.	

Intentionally left blank

Aircraft with nose landing gear and one main landing gear collapsed, missing, or retracted and one or both engines missing - Lifting

Applicability: 50001-54999, 55001-59999

Table of contents

Page

Aircraft with nose landing gear and one main landing gear collapsed, missing, or retracted and one or both engines missing - Lifting..... 1
References..... 1
Common information..... 1
Preliminary requirements..... 2
Procedure..... 3
Requirements after job completion..... 7

List of tables

Page

1 References..... 1
2 Required conditions..... 2
3 Support equipment..... 2
4 Consumables, materials, and expendables..... 2
5 Spares..... 3
6 Required conditions..... 7

List of figures

Page

1 Aircraft with nose landing gear and one main landing gear collapsed, missing, or retracted and one or both engines missing - Lifting..... 6

References

Table 1 References

Data Module/Technical Publication	Title
BD500-A-J07-10-00-00AAA-062A-A	Use of jacks - Standard support equipment and tools
BD500-A-J07-12-00-00AAA-062A-A	Use of pneumatic lifting bags - Standard support equipment and tools
BD500-A-J07-30-00-00AAA-062A-A	Use of cranes - Standard support equipment and tools

Common information

This data module gives the recovery procedure for the aircraft with Nose Landing Gear (NLG) collapsed, missing or retracted and one Main Landing Gear (MLG) collapsed, missing or retracted and one or both engine missing.

Preliminary requirements

Required conditions

Table 2 Required conditions

Action/Condition	Data Module/Technical publication
Make sure that the aircraft is in level attitude.	
Make sure that the maximum fuel is removed to obey with the weight and balance problems and maximum possible lifting loads.	
Make sure that the weight and balance is calculated.	
Make sure that the tail tip protection is given.	
Make sure that the aircraft rest on the engine cowls. One or both engines may be missing.	

Support equipment

Table 3 Support equipment

Name	Identification/Reference	Quantity	Remark
None			

Consumables, materials, and expendables

Table 4 Consumables, materials, and expendables

Name	Identification/Reference	Quantity	Remark
None			

Spares

Table 5 Spares

Name	Identification/Reference	Quantity	Remark
None			

Safety conditions

None

Procedure

CAUTION

You must do the lateral leveling before you do the longitudinal leveling.

1 Recovery procedure

There can be 6 in. (152.40 mm) possible crush damage to the lower forward fuselage, outboard lower wing, and engine nose cowl on the defective MLG side.

Refer to Fig. 1 .

1.1 Level the aircraft along the lateral axis as follows:

1.1.1 Level the aircraft with the pneumatic bags as follows:

Refer to BD500-A-J07-12-00-00AAA-062A-A.

Note

You must put the aircraft on the jack or the shore the aircraft after it is lifted to sufficient height.

Note

If the pneumatic bags cover the wing jack point, it is necessary to move the aircraft before you start the work on the landing gear.

Note

The skin pressure must not exceed 5 psi (34.47 kPa).

1.1.1.1 Install the pneumatic bags between the RIB3 and RIB7 below each wing.

1.1.1.2 Lift the aircraft to the height necessary to install a trailer under the pylon or the engine on the defective MLG side.

1.1.2 Level the aircraft with the jack as follows:

Refer to BD500-A-J07-10-00-00AAA-062A-A.

Note
You must put the aircraft on jack after the aircraft lifted to sufficient height.

1.1.2.1 Install the jacks below each wing.

1.1.2.2 Lift the aircraft to the height necessary to install a trailer under the pylon or the engine on the defective MLG side.

1.1.3 You can also level the aircraft from the engine pylon before the removal of air bags to give access to the wing jack point.

Note
The pylon must be examined to make sure that it can hold the possible lifting loads.

1.2 Level the aircraft along the longitudinal axis as follows:

1.2.1 Level the aircraft with the pneumatic bags as follows:
Refer to BD500-A-J07-12-00-00AAA-062A-A.

Note
You must put the aircraft on the jack or the shore the aircraft after it is lifted to sufficient height.

Note
If the pneumatic bags cover the wing jack point, it is necessary to move the aircraft before you start the work on the landing gear.

Note
The fuselage skin pressure must not exceed 5 psi (34.47 kPa).

1.2.1.1 Install the pneumatic bags below the forward fuselage.

1.2.1.2 Monitor the maximum skin pressure.

1.2.1.3 If necessary, Remove the different antenna.

1.2.1.4 Lift the aircraft to the height, necessary to extend the NLG.

1.2.1.5 Lift the aircraft to the height, necessary to install the nose towing dolly with a turntable and the support trailer below the wing.

1.2.2 Level the aircraft with the jack as follows:
Refer to BD500-A-J07-10-00-00AAA-062A-A.

Note
You must put the aircraft on jack after the aircraft lifted to sufficient height.

1.2.2.1 Install the jacks below the forward fuselage.

1.2.2.2 Lift the aircraft to the height, necessary to extend the NLG.

1.2.2.3 Lift the aircraft to the height, necessary to install the nose towing dolly with a turntable and the support trailer below the wing.

1.2.3 Level the aircraft with the slings as follows:

Refer to BD500-A-J07-30-00-00AAA-062A-A.

1.2.3.1 Use a load balancing sling assembly.

1.2.3.2 If necessary, Remove the different antenna.

1.2.3.3 Lift the aircraft to the height, necessary to extend the NLG.

1.2.3.4 Lift the aircraft to the height, necessary to install the nose towing dolly with a turntable and the support trailer below the wing.

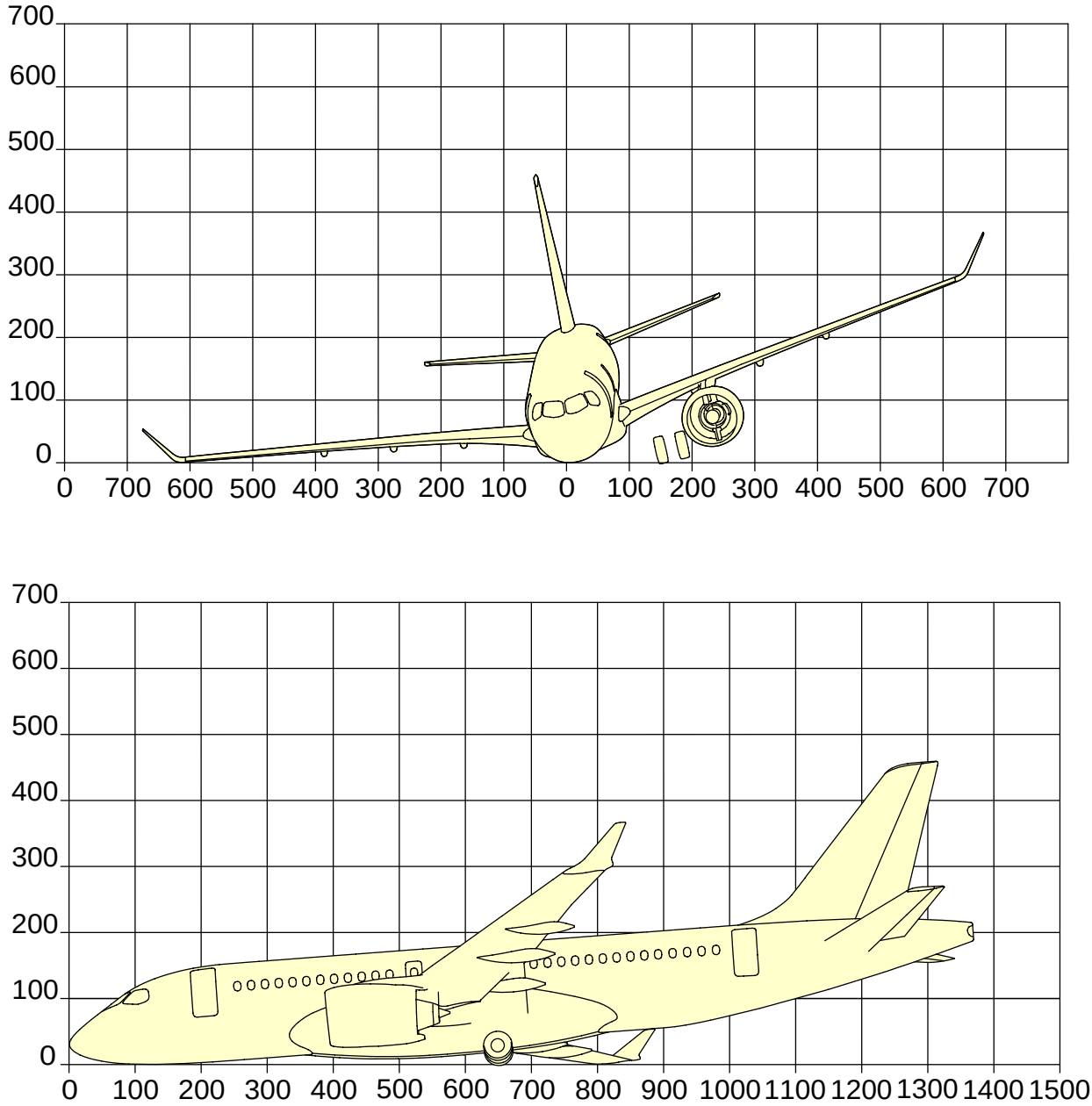

NOTE

1 square equals to 100 inches.

ICN-BD500-A-J071200-C-3AB48-30094-A-001-01

Figure 1 Aircraft with nose landing gear and one main landing gear collapsed, missing, or retracted and one or both engines missing - Lifting

Requirements after job completion

Required conditions

Table 6 Required conditions

Action/Condition	Data Module/Technical publication
None	

Intentionally left blank

Aircraft with one main landing gear collapsed, missing, or retracted - Lifting

Applicability: 50001-54999, 55001-59999

Table of contents

Page

Aircraft with one main landing gear collapsed, missing, or retracted - Lifting..... 1
References..... 1
Common information..... 1
Preliminary requirements..... 2
Procedure..... 3
Requirements after job completion..... 6

List of tables

Page

1 References..... 1
2 Required conditions..... 2
3 Support equipment..... 2
4 Consumables, materials, and expendables..... 2
5 Spares..... 3
6 Required conditions..... 6

List of figures

Page

1 Aircraft with one main landing gear collapsed, missing, or retracted - Lifting..... 5

References

Table 1 References

Data Module/Technical Publication	Title
BD500-A-J07-10-00-00AAA-062A-A	Use of jacks - Standard support equipment and tools
BD500-A-J07-12-00-00AAA-062A-A	Use of pneumatic lifting bags - Standard support equipment and tools

Common information

This data module gives the recovery procedure for the aircraft with one Main Landing Gear (MLG) collapsed, missing, or retracted.

Preliminary requirements

Required conditions

Table 2 Required conditions

Action/Condition	Data Module/Technical publication
Make sure that the aircraft is in level attitude.	
Make sure that the maximum fuel is removed to obey with the weight and balance problems and maximum possible lifting loads.	
Make sure that the weight and balance is calculated.	
Make sure that the tail tip protection is given.	
Make sure that the aircraft rest on the engine of the wing with the failed MLG.	

Support equipment

Table 3 Support equipment

Name	Identification/Reference	Quantity	Remark
None			

Consumables, materials, and expendables

Table 4 Consumables, materials, and expendables

Name	Identification/Reference	Quantity	Remark
None			

Spares

Table 5 Spares

Name	Identification/Reference	Quantity	Remark
None			

Safety conditions

None

Procedure

CAUTION

You must do the lateral leveling before you do the longitudinal leveling.

1 Recovery procedure

There can be 6 in. (152.40 mm) possible crush damage to the engine nose cowl on the defective MLG side.

Refer to Fig. 1 .

1.1 Level and lift the aircraft along the lateral axis:

1.1.1 Level and lift the aircraft with the pneumatic bags as follows:

Refer to BD500-A-J07-12-00-00AAA-062A-A.

1.1.1.1 Install the pneumatic bag between the wing RIB3 and RIB7.

1.1.1.2 Lift the aircraft to the height, necessary to extend the MLG.

Note

You must put the aircraft on the jack or the shore the aircraft after it is lifted to sufficient height.

Note

If the pneumatic bags cover the wing jack point, it is necessary to move the aircraft before you start the work on the landing gear.

1.1.1.3 Lift the aircraft to the height necessary to install a trailer under the engine on the defective MLG side.

1.1.2 Level and lift the aircraft with the jack as follows:

Refer to BD500-A-J07-10-00-00AAA-062A-A.

Note

You must put the aircraft on jack after the aircraft lifted to sufficient height.

1.1.2.1 Install the jack under the wing.

1.1.2.2 Lift the aircraft to the height, necessary to extend the MLG.

1.1.2.3 Lift the aircraft to the height necessary to install a trailer under the engine on the defective MLG side.

1.1.3 You can also level and lift the aircraft from the engine pylon before the removal of air bags to give access to the wing jack point.

Note

The pylon must be examined to make sure that it can hold the possible lifting loads.

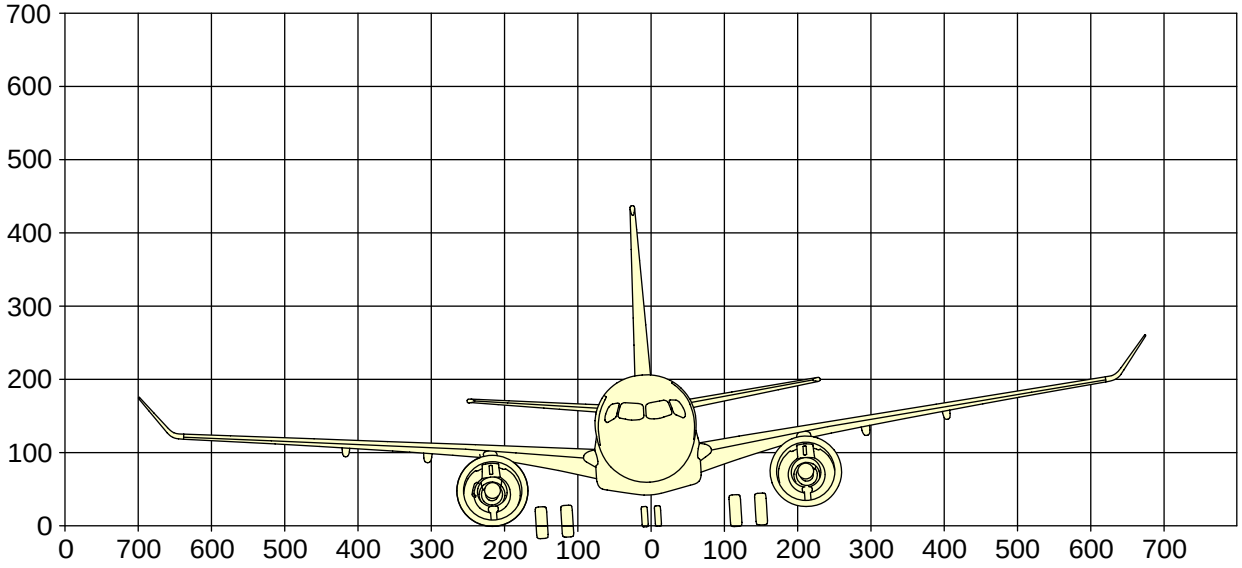

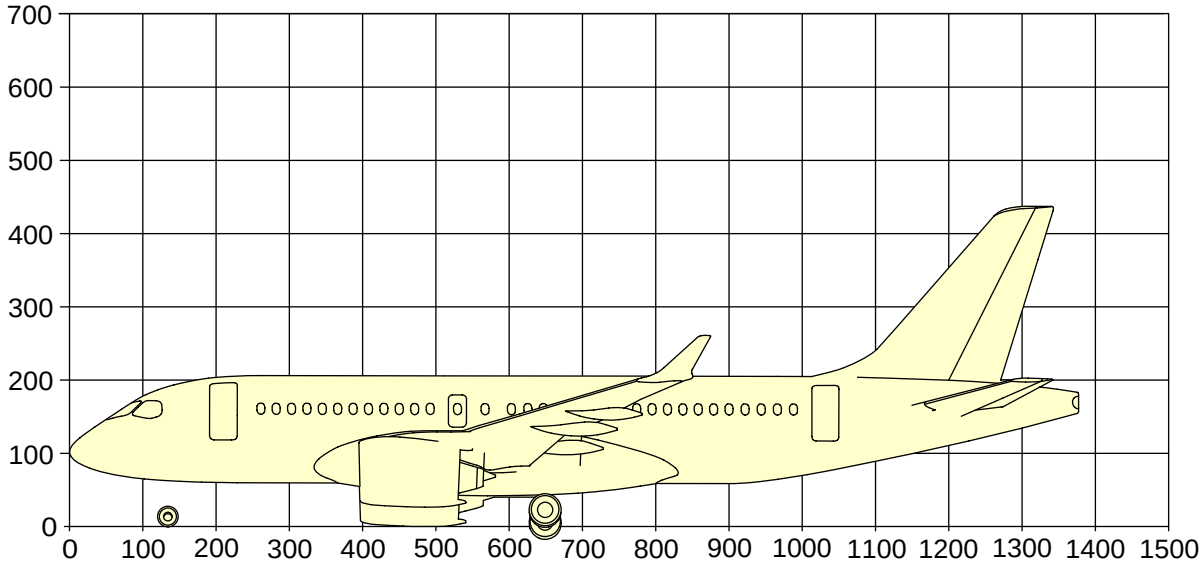

NOTE

1 square equals to 100 inches.

ICN-BD500-A-J071200-C-3AB48-30249-A-001-01

Figure 1 Aircraft with one main landing gear collapsed, missing, or retracted - Lifting

Requirements after job completion

Required conditions

Table 6 Required conditions

Action/Condition	Data Module/Technical publication
Make sure that the aircraft is back to the hard surface or repair section.	
Record all the paperwork including procedures to recover the aircraft, loads applied, list of removed parts, and other requirements.	
This data must give to the inspection or repair section to help the aircraft to return to service.	

A220

Aircraft with one main landing gear collapsed, missing, or retracted and one or both engines missing - Lifting

Applicability: 50001-54999, 55001-59999

Table of contents

Page

Aircraft with one main landing gear collapsed, missing, or retracted and one or both engines missing - Lifting 1
References 1
Common information 1
Preliminary requirements 2
Procedure 3
Requirements after job completion 6

List of tables

Page

1 References 1
2 Required conditions 2
3 Support equipment 2
4 Consumables, materials, and expendables 2
5 Spares 3
6 Required conditions 6

List of figures

Page

1 Aircraft with one main landing gear collapsed, missing, or retracted and one or both engines missing - Lifting 5

References

Table 1 References

Data Module/Technical Publication	Title
BD500-A-J07-10-00-00AAA-062A-A	Use of jacks - Standard support equipment and tools
BD500-A-J07-12-00-00AAA-062A-A	Use of pneumatic lifting bags - Standard support equipment and tools

Common information

This data module gives the recovery procedure for the aircraft with one Main Landing Gear (MLG) collapsed, missing, or retracted and one or both engines missing.

Preliminary requirements

Required conditions

Table 2 Required conditions

Action/Condition	Data Module/Technical publication
Make sure that the aircraft is in level attitude.	
Make sure that the maximum fuel is removed to obey with the weight and balance problems and maximum possible lifting loads.	
Make sure that the weight and balance is calculated for the missing engine/engines.	
Make sure that the tail tip protection is given.	
Make sure that the aircraft rest on the outboard wing of the wing with the failed MLG and the missing engine.	

Support equipment

Table 3 Support equipment

Name	Identification/Reference	Quantity	Remark
None			

Consumables, materials, and expendables

Table 4 Consumables, materials, and expendables

Name	Identification/Reference	Quantity	Remark
None			

Spares

Table 5 Spares

Name	Identification/Reference	Quantity	Remark
None			

Safety conditions

None

Procedure

CAUTION

You must do the lateral leveling before you do the longitudinal leveling.

1 Recovery procedure

There can be 6 in. (152.40 mm) possible crush damage to the outboard lower wing surface on the defective MLG side.

Refer to Fig. 1 .

1.1 Level the aircraft along the lateral axis:

1.1.1 Use a pneumatic bag to level the aircraft. Refer to BD500-A-J07-12-00-00AAA-062A-A.

1.1.1.1 Install the pneumatic bags between the RIB3 and RIB7 below each wing.

Note

You must put the aircraft on the jack or the shore the aircraft after it is lifted to sufficient height.

Note

If the pneumatic bags cover the wing jack point, it is necessary to move the aircraft before you start the work on the landing gear.

1.1.1.2 Lift the aircraft to the height, necessary to extend the MLG.

1.1.1.3 Lift the aircraft to the height necessary to install a support trailer under the engine on the defective MLG side.

1.1.1.4 Level the aircraft along the lateral axis.

1.1.2 Level the aircraft with the jack as follows:

Refer to BD500-A-J07-10-00-00AAA-062A-A.

Note

You must put the aircraft on jack after the aircraft lifted to sufficient height.

1.1.2.1 Install the jack under the wing.

1.1.2.2 Lift the aircraft to the height, necessary to extend the MLG.

1.1.2.3 Level the aircraft along the lateral axis.

1.1.3 You can also level and lift the aircraft from the engine pylon before the removal of air bags to give access to the wing jack point.

Note

The pylon must be examined to make sure that it can hold the possible lifting loads.

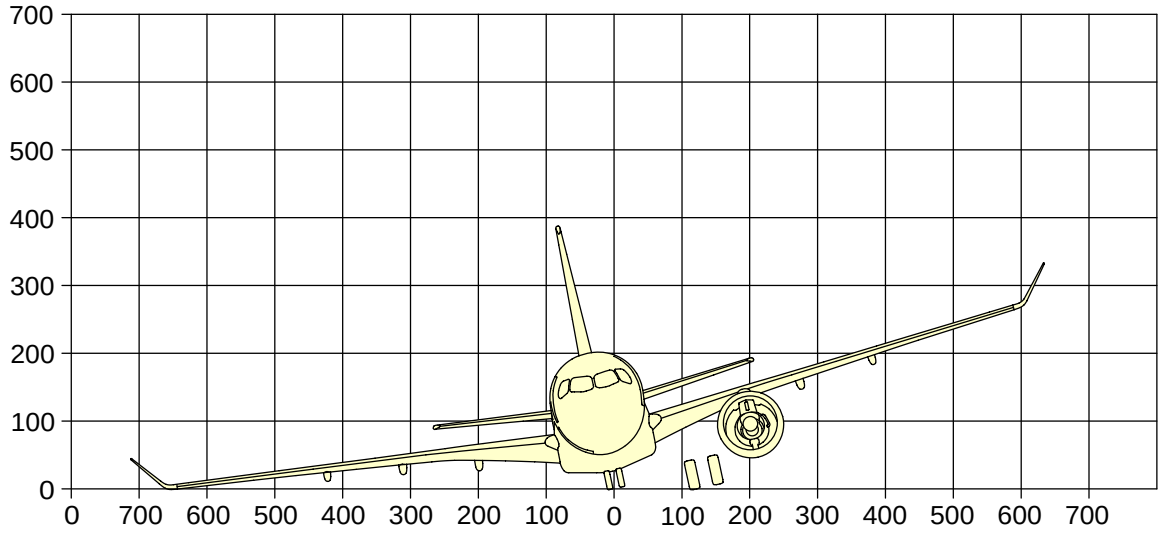

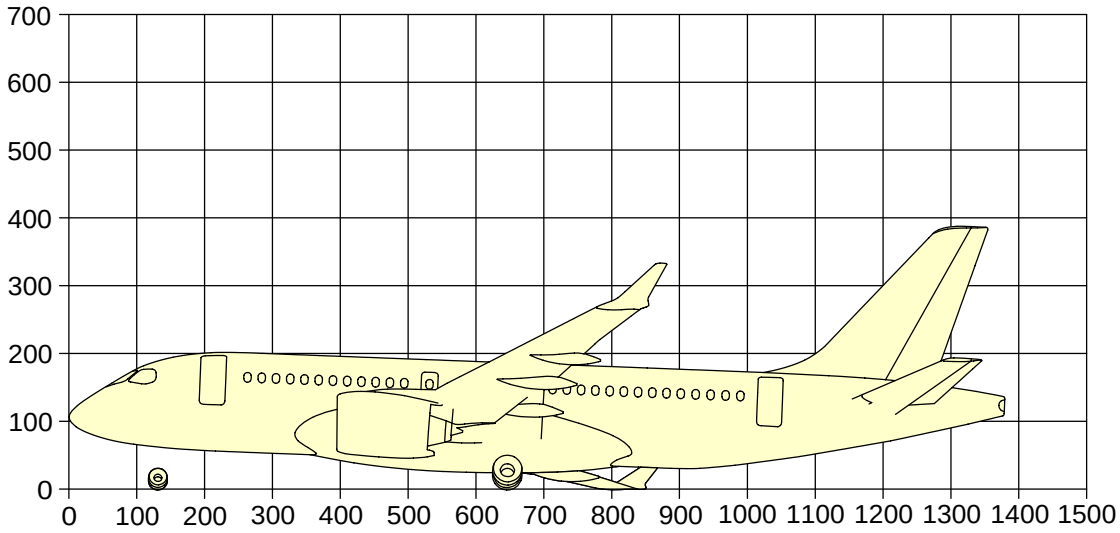

NOTE

1 square equals to 100 inches.

ICN-BD500-A-J071200-C-3AB48-30286-A-001-01

Figure 1 Aircraft with one main landing gear collapsed, missing, or retracted and one or both engines missing - Lifting

Requirements after job completion

Required conditions

Table 6 Required conditions

Action/Condition	Data Module/Technical publication
Make sure that the aircraft is back to the hard surface or repair section.	
Record all the paperwork including procedures to recover the aircraft, loads applied, list of removed parts, and other requirements.	
This data must give to the inspection or repair section to help the aircraft return to service.	

Aircraft with all landing gears collapsed, missing, or retracted - Lifting

Applicability: 50001-54999, 55001-59999

Table of contents

Page

Aircraft with all landing gears collapsed, missing, or retracted - Lifting..... 1
References..... 1
Common information..... 1
Preliminary requirements..... 1
Procedure..... 3
Requirements after job completion..... 6

List of tables

Page

1 References..... 1
2 Required conditions..... 1
3 Support equipment..... 2
4 Consumables, materials, and expendables..... 2
5 Spares..... 2
6 Required conditions..... 6

List of figures

Page

1 Aircraft with all landing gears collapsed, missing, or retracted - Lifting..... 5

References

Table 1 References

Data Module/Technical Publication	Title
BD500-A-J07-10-00-00AAA-062A-A	Use of jacks - Standard support equipment and tools
BD500-A-J07-12-00-00AAA-062A-A	Use of pneumatic lifting bags - Standard support equipment and tools

Common information

This data module gives the recovery procedure for the aircraft with all the landing gear retracted, collapsed, or missing.

Preliminary requirements

Required conditions

Table 2 Required conditions

Action/Condition	Data Module/Technical publication
Make sure that the aircraft is in level attitude.	

Action/Condition	Data Module/Technical publication
Make sure that the maximum fuel is removed to obey with the weight and balance problems and maximum possible lifting loads.	
Make sure that the weight and balance is calculated.	
Make sure that the tail tip protection is given.	
Make sure that the aircraft rest on the engine cowls.	

Support equipment

Table 3 Support equipment

Name	Identification/Reference	Quantity	Remark
None			

Consumables, materials, and expendables

Table 4 Consumables, materials, and expendables

Name	Identification/Reference	Quantity	Remark
None			

Spares

Table 5 Spares

Name	Identification/Reference	Quantity	Remark
None			

Safety conditions

None

Procedure

CAUTION

You must do the lateral leveling before you do the longitudinal leveling.

1 Recovery procedure

Refer to Fig. 1 .

There can be 6 in. (152.40 mm) possible crush damage to the aft lower fuselage and to the engine nose cowls.

1.1 Level the aircraft along the lateral axis as follows:

1.1.1 Level the aircraft with the pneumatic bags as follows:

Refer to BD500-A-J07-12-00-00AAA-062A-A.

Note

You must put the aircraft on the jack or the shore the aircraft after it is lifted to sufficient height.

Note

If the pneumatic bags cover the wing jack point, it is necessary to move the aircraft before you start the work on the landing gear.

1.1.1.1 Install the pneumatic bag between the wing RIB3 and RIB7.

1.1.1.2 Lift the aircraft to the height, necessary to extend the Main Landing Gear (MLG).

1.1.1.3 Lift the aircraft to the height, necessary to install the the support trailer.

1.1.2 Level the aircraft with the jack as follows:

Refer to BD500-A-J07-10-00-00AAA-062A-A.

Note

You must put the aircraft on jack after the aircraft lifted to sufficient height.

1.1.2.1 Install the jack under the wing.

1.1.2.2 Lift the aircraft to the height, necessary to extend the MLG.

1.1.2.3 Lift the aircraft to the height, necessary to install the support trailer.

1.1.3 You can also level and lift the aircraft from the engine pylon before the removal of air bags to give access to the wing jack point.

Note

The pylon must be examined to make sure that it can hold the possible lifting load.

1.2 Level the aircraft along the longitudinal axis as follows:

1.2.1 Level the aircraft with the pneumatic bags as follows:

Refer to BD500-A-J07-12-00-00AAA-062A-A.

Note

You must put the aircraft on the jack or the shore the aircraft after it is lifted to sufficient height.

Note

If the pneumatic bags cover the wing jack point, it is necessary to move the aircraft before you start the work on the landing gear.

1.2.1.1 Install the pneumatic bag below the aft fuselage.

1.2.1.2 If necessary, Remove the different antenna.

1.2.1.3 Lift the aircraft to the height, necessary to extend the Nose Landing Gear (NLG).

1.2.1.4 Lift the aircraft to the height, necessary to install the nose towing dolly with a turntable.

1.2.2 Level the aircraft with the jack as follows:

Refer to BD500-A-J07-10-00-00AAA-062A-A.

Note

You must put the aircraft on jack after the aircraft lifted to sufficient height.

1.2.2.1 Install the jack under the aft fuselage.

1.2.2.2 Lift the aircraft to the height, necessary to extend the NLG.

1.2.2.3 Lift the aircraft to the height, necessary to install the nose towing dolly with a turntable.

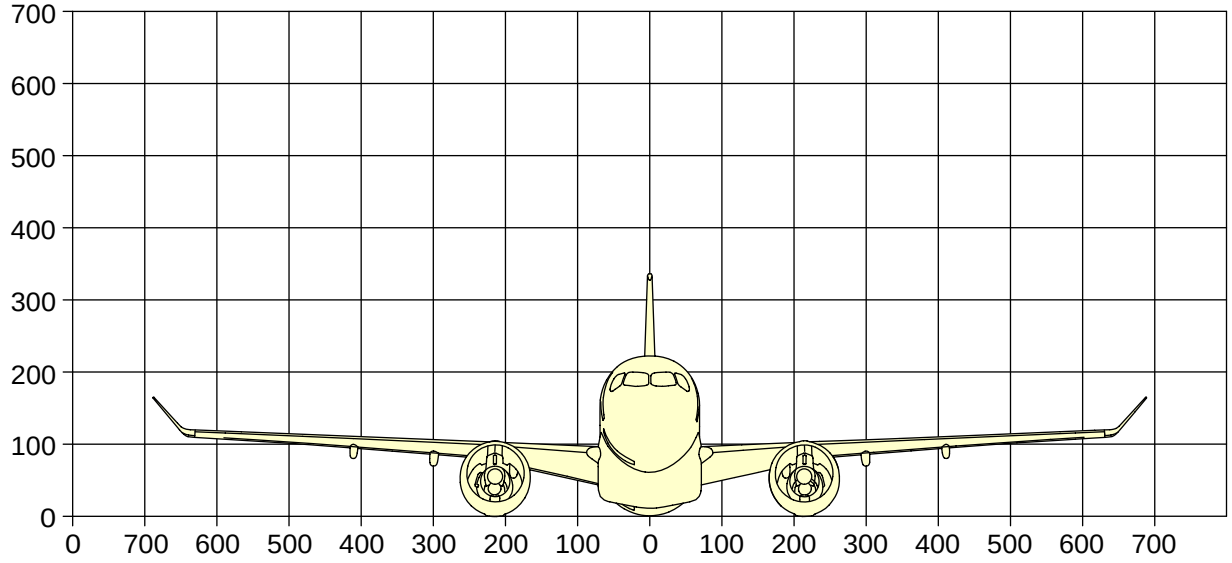

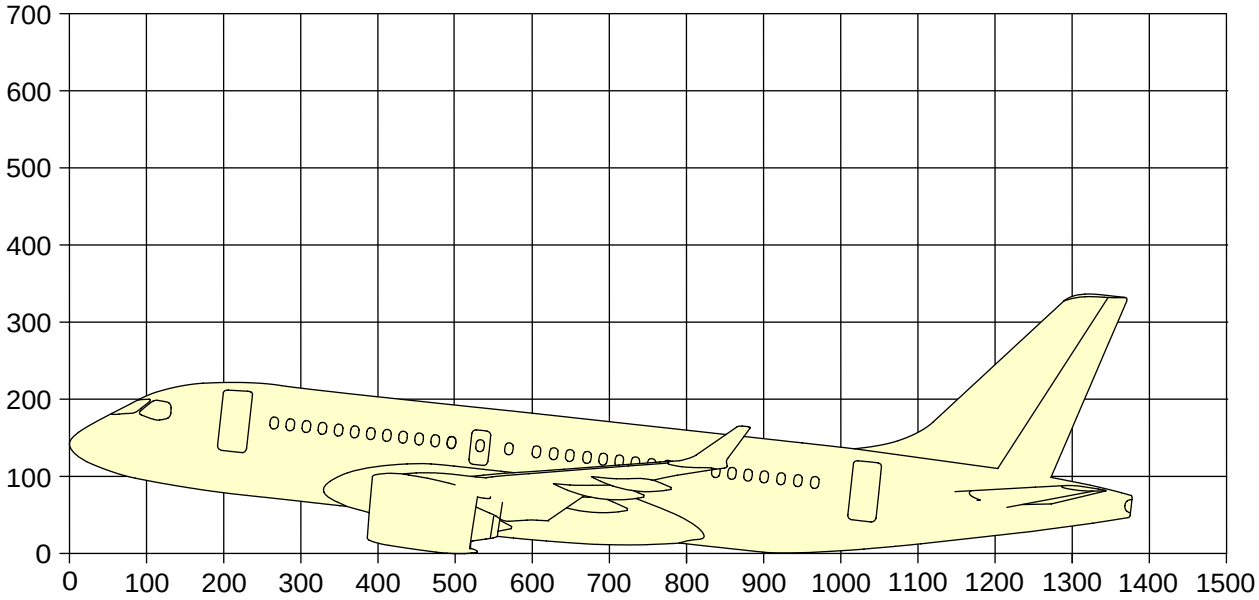

NOTE

1 square equals to 100 inches.

ICN-BD500-A-J071200-C-3AB48-30671-A-001-01

Figure 1 Aircraft with all landing gears collapsed, missing, or retracted - Lifting

Requirements after job completion

Required conditions

Table 6 Required conditions

Action/Condition	Data Module/Technical publication
Make sure that the aircraft is back to the hard surface or repair section.	
Record all the paperwork including procedures to recover the aircraft, loads applied, list of removed parts, and other requirements.	
This data must give to the inspection or repair section to help the aircraft to return to service.	

Aircraft with all landing gears collapsed, missing, or retracted and one or both engines missing - Lifting

Applicability: 50001-54999, 55001-59999

Table of contents

Page

Aircraft with all landing gears collapsed, missing, or retracted and one or both engines missing - Lifting..... 1
References..... 1
Common information..... 1
Preliminary requirements..... 2
Procedure..... 3
Requirements after job completion..... 6

List of tables

Page

1 References..... 1
2 Required conditions..... 2
3 Support equipment..... 2
4 Consumables, materials, and expendables..... 2
5 Spares..... 3
6 Required conditions..... 6

List of figures

Page

1 Aircraft with all landing gears collapsed, missing, or retracted and one or both engines missing - Lifting..... 5

References

Table 1 References

Data Module/Technical Publication	Title
BD500-A-J07-10-00-00AAA-062A-A	Use of jacks - Standard support equipment and tools
BD500-A-J07-12-00-00AAA-062A-A	Use of pneumatic lifting bags - Standard support equipment and tools
BD500-A-J07-30-00-00AAA-062A-A	Use of cranes - Standard support equipment and tools

Common information

This data module gives the recovery procedure for the aircraft with all landing gears collapsed, missing, or retracted and one or both engine missing.

Preliminary requirements

Required conditions

Table 2 Required conditions

Action/Condition	Data Module/Technical publication
Make sure that the aircraft is in level attitude.	
Make sure that the maximum fuel is removed to obey with the weight and balance problems and maximum possible lifting loads.	
Make sure that the weight and balance is calculated.	
Make sure that the tail tip protection is given.	
Make sure that the aircraft rest on the center wing fuselage fairing and on outboard wing depends on one or both engine missing.	

Support equipment

Table 3 Support equipment

Name	Identification/Reference	Quantity	Remark
None			

Consumables, materials, and expendables

Table 4 Consumables, materials, and expendables

Name	Identification/Reference	Quantity	Remark
None			

Spares

Table 5 Spares

Name	Identification/Reference	Quantity	Remark
None			

Safety conditions

None

Procedure

CAUTION

You must do the lateral leveling before you do the longitudinal leveling.

1 Recovery procedure

Refer to Fig. 1 .

1.1 Level and lift the aircraft along the lateral axis as follows:

1.1.1 Level and lift the aircraft with the pneumatic bags as follows:

Refer to BD500-A-J07-12-00-00AAA-062A-A.

1.1.1.1 Install the pneumatic bag between the wing RIB3 and RIB7.

1.1.1.2 If necessary, remove the applicable antennas.

1.1.1.3 Lift the aircraft to the height, necessary to extend the Main Landing Gear (MLG).

1.1.1.4 Lift the aircraft to the height, necessary to install the nose towing dolly with a turntable.

1.1.2 Level and lift the aircraft with the jack as follows:

Refer to BD500-A-J07-10-00-00AAA-062A-A.

1.1.2.1 Install the jack under the wing.

1.1.2.2 Lift the aircraft to the height, necessary to extend the MLG.

1.1.2.3 Lift the aircraft to the height, necessary to install the nose towing dolly with a turntable.

1.2 Level and lift the aircraft along the longitudinal axis:

1.2.1 Level and lift the aircraft with the slings as follows:

Refer to BD500-A-J07-30-00-00AAA-062A-A.

1.2.1.1 Use a load balancing sling assembly.

1.2.1.2 If necessary, remove the applicable antennas.

1.2.1.3 Lift the aircraft to the height, necessary to extend the Nose Landing Gear (NLG).

1.2.1.4 Lift the aircraft to the height, necessary to install the nose towing dolly with a turntable.

1.2.2 Level and lift the aircraft with the pneumatic bags as follows:

Refer to BD500-A-J07-12-00-00AAA-062A-A.

1.2.2.1 Install the pneumatic bag between the wing RIB3 and RIB9.

1.2.2.2 If necessary, remove the applicable antennas.

1.2.2.3 Lift the aircraft to the height, necessary to extend the MLG.

1.2.2.4 Lift the aircraft to the height, necessary to install the nose towing dolly with a turntable.

1.2.3 Level and lift the aircraft with the jack as follows:

Refer to BD500-A-J07-10-00-00AAA-062A-A.

1.2.3.1 Install the jack under the wing.

1.2.3.2 Lift the aircraft to the height, necessary to extend the MLG.

1.2.3.3 Lift the aircraft to the height, necessary to install the nose towing dolly with a turntable.

1.3 level and lift the aircraft from engine pylons:

1.3.1 You can also lift the aircraft from the engine turbine case P9 flange.

Note

The maximum rest load applied by the nylon straps on the P9 flange must not be more than of 50,000 lbs (22,680 kg).

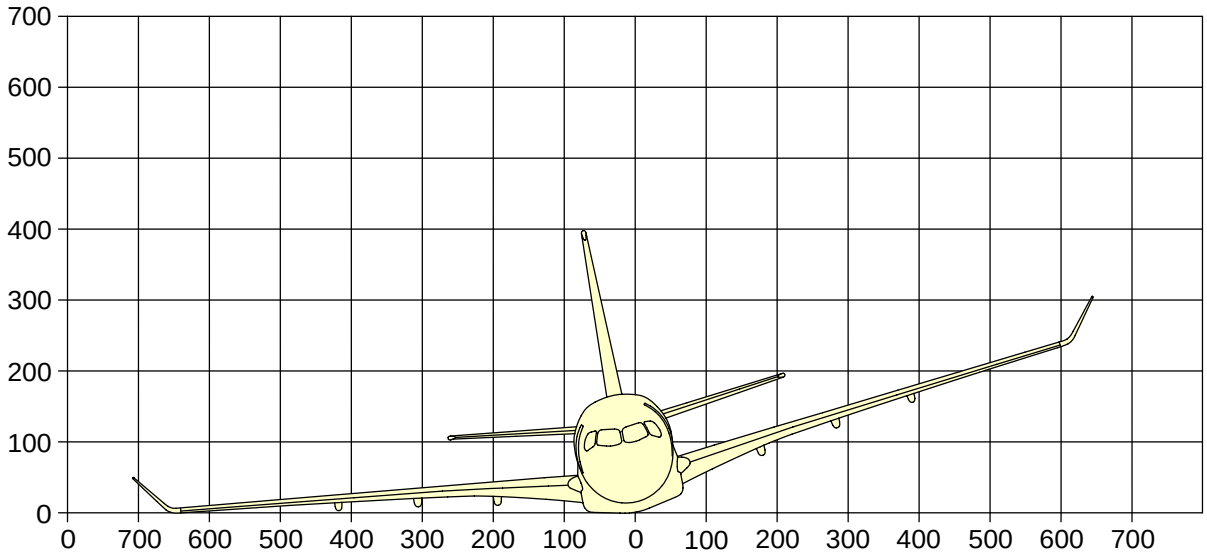

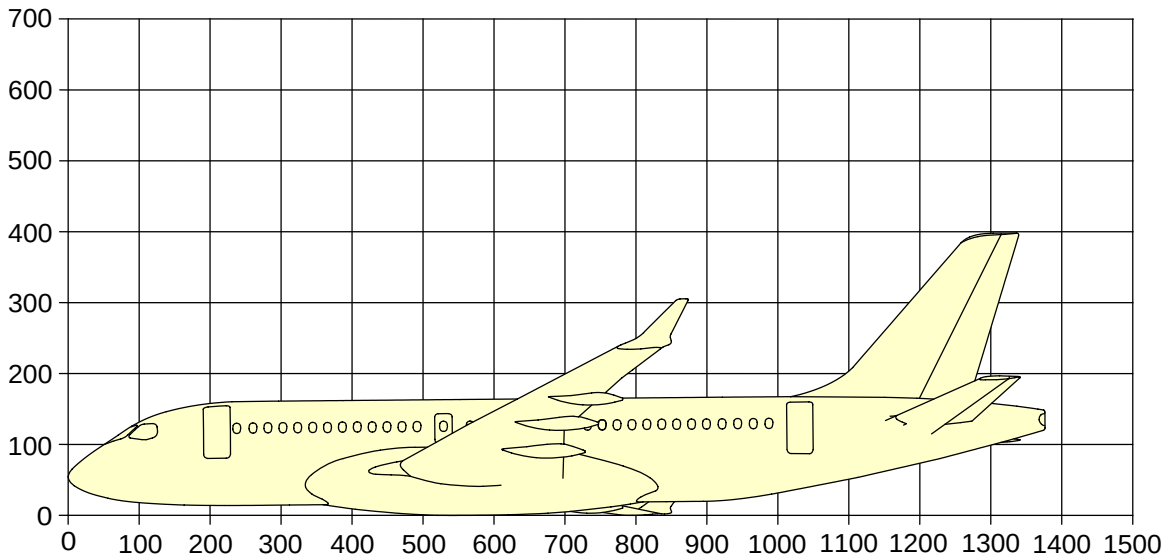

NOTE

1 square equals to 100 inches.

ICN-BD500-A-J071200-C-3AB48-30379-A-001-01

Figure 1 Aircraft with all landing gears collapsed, missing, or retracted and one or both engines missing - Lifting

Requirements after job completion

Required conditions

Table 6 Required conditions

Action/Condition	Data Module/Technical publication
Make sure that the aircraft is back to the hard surface or repair section.	
Record all the paperwork including procedures to recover the aircraft, loads applied, list of removed parts, and other requirements.	
This data must give to the inspection or repair section to help the aircraft to return to service.	

A220

Aircraft with both main landing gears collapsed, missing, or retracted - Lifting

Applicability: 50001-54999, 55001-59999

Table of contents

Page

Aircraft with both main landing gears collapsed, missing, or retracted - Lifting..... 1
References..... 1
Common information..... 1
Preliminary requirements..... 2
Procedure..... 3
Requirements after job completion..... 6

List of tables

Page

1 References..... 1
2 Required conditions..... 2
3 Support equipment..... 2
4 Consumables, materials, and expendables..... 2
5 Spares..... 3
6 Required conditions..... 6

List of figures

Page

1 Aircraft with both main landing gears collapsed, missing, or retracted - Lifting..... 5

References

Table 1 References

Data Module/Technical Publication	Title
BD500-A-J07-10-00-00AAA-062A-A	Use of jacks - Standard support equipment and tools
BD500-A-J07-12-00-00AAA-062A-A	Use of pneumatic lifting bags - Standard support equipment and tools

Common information

This data module gives the recovery procedure for the aircraft with both the Main Landing Gear (MLG) retracted, collapsed, or missing.

Preliminary requirements

Required conditions

Table 2 Required conditions

Action/Condition	Data Module/Technical publication
Make sure that the aircraft is in level attitude.	
Make sure that the maximum fuel is removed to obey with the weight and balance problems and maximum possible lifting loads.	
Make sure that the weight and balance is calculated.	
Make sure that the tail tip protection is given.	
Make sure that the aircraft rest on both the engine nose cowls and the aft lower fuselage.	

Support equipment

Table 3 Support equipment

Name	Identification/Reference	Quantity	Remark
None			

Consumables, materials, and expendables

Table 4 Consumables, materials, and expendables

Name	Identification/Reference	Quantity	Remark
None			

Spares

Table 5 Spares

Name	Identification/Reference	Quantity	Remark
None			

Safety conditions

None

Procedure

CAUTION

You must do the lateral leveling before you do the longitudinal leveling.

1 Recovery procedure

Refer to Fig. 1 .

There can be 6 in. (152.40 mm) possible crush damage to the aft lower fuselage and engine nose cowl.

1.1 Level the aircraft along the lateral axis as follows:

1.1.1 Level the aircraft with the pneumatic bags as follows:

Refer to BD500-A-J07-12-00-00AAA-062A-A.

Note

You must put the aircraft on the jack or the shore the aircraft after it is lifted to sufficient height.

Note

If the pneumatic bags cover the wing jack point, it is necessary to move the aircraft before you start the work on the landing gear.

1.1.1.1 Install the pneumatic bags between the RIB3 and RIB7 below each wing.

1.1.1.2 Level the aircraft along the lateral axis.

1.1.2 Level the aircraft with the jack as follows:

Refer to BD500-A-J07-10-00-00AAA-062A-A.

Note

You must put the aircraft on jack after the aircraft lifted to sufficient height.

1.1.2.1 Install the jacks below each wing.

1.1.2.2 Level the aircraft along the lateral axis.

1.1.3 You can also level and lift the aircraft from the engine pylon before the removal of air bags to give access to the wing jack point.

Note
The pylon must be examined to make sure that it can hold the possible lifting loads.

1.2 Level and lift the aircraft along the longitudinal axis as follows:

1.2.1 Level and lift the aircraft with the pneumatic bags as follows:
Refer to BD500-A-J07-12-00-00AAA-062A-A.

1.2.1.1 Install the pneumatic bags below the forward fuselage.

Note
The skin pressure must not exceed 5 psi (34.47 kPa).

1.2.1.2 Monitor the maximum skin pressure.

1.2.1.3 Lift the aircraft to the height, necessary to install the nose towing dolly with a turntable and the support trailer.

1.2.2 Level and lift the aircraft with the jack as follows:
Refer to BD500-A-J07-10-00-00AAA-062A-A.

Note
You must put the aircraft on jack after the aircraft lifted to sufficient height.

1.2.2.1 Install the jacks below the forward fuselage.

1.2.2.2 Lift the aircraft to the height, necessary to extend the Nose Landing Gear (NLG).

1.2.2.3 Lift the aircraft to the height, necessary to install the nose towing dolly with a turntable and the support trailer.

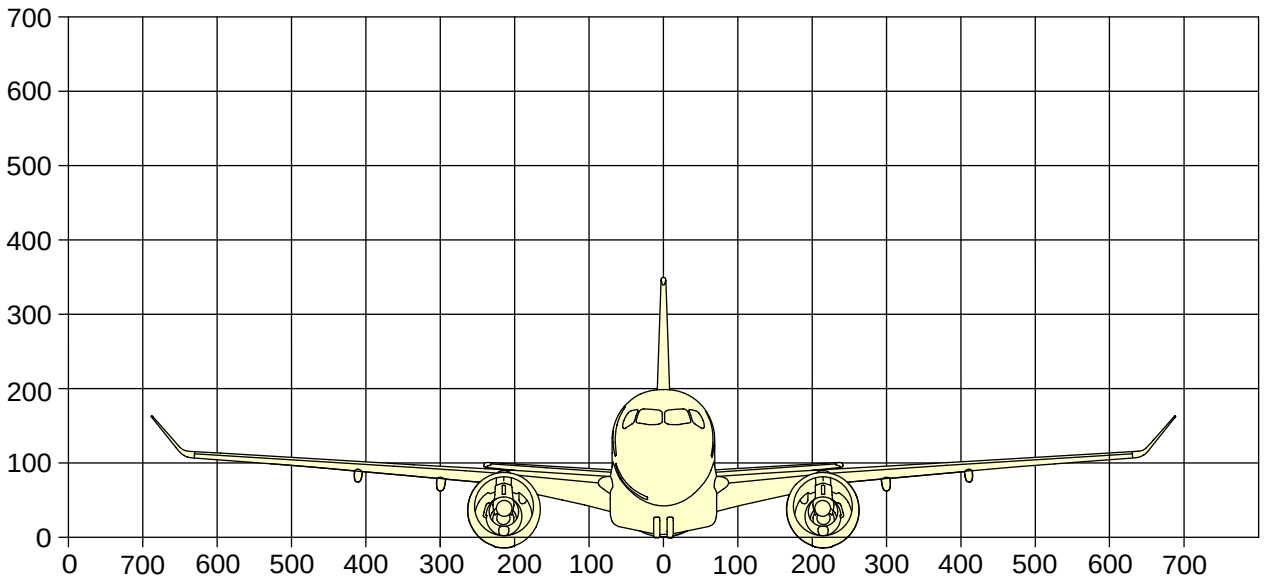

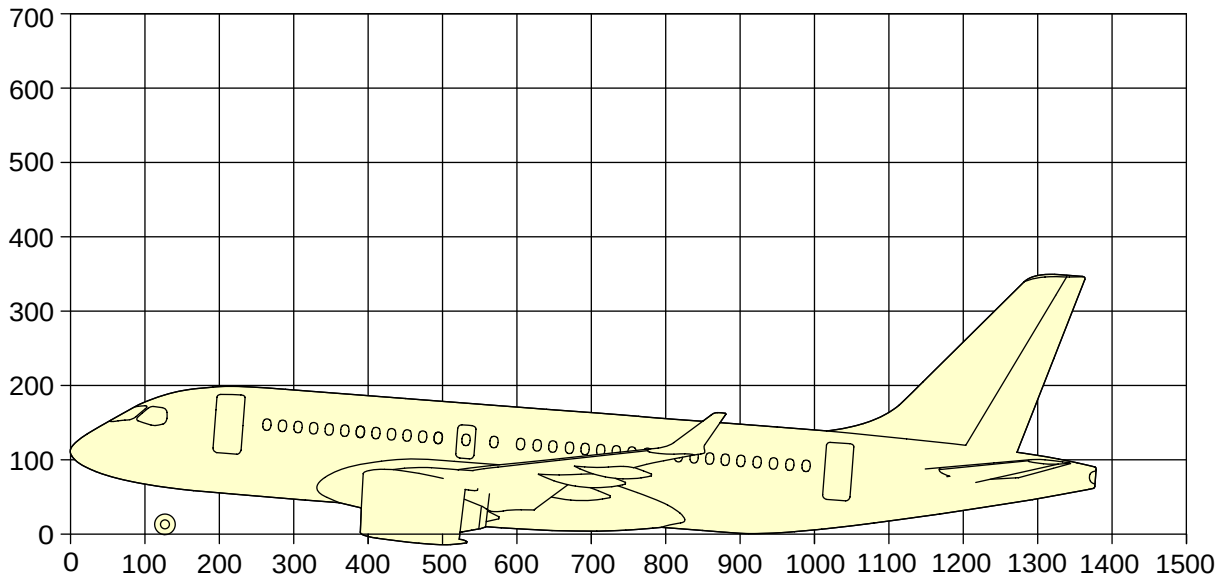

NOTE

1 square equals to 100 inches.

ICN-BD500-A-J071200-C-3AB48-30733-A-001-01

Figure 1 Aircraft with both main landing gears collapsed, missing, or retracted - Lifting

Requirements after job completion

Required conditions

Table 6 Required conditions

Action/Condition	Data Module/Technical publication
Make sure that the aircraft is back to the hard surface or repair section.	
Record all the paperwork including procedures to recover the aircraft, loads applied, list of removed parts, and other requirements.	
This data must give to the inspection or repair section to help the aircraft return to service.	

A220

Aircraft with both main landing gears collapsed, missing, or retracted and one or both engines missing - Lifting

Applicability: 50001-54999, 55001-59999

Table of contents

Page

Aircraft with both main landing gears collapsed, missing, or retracted and one or both engines missing - Lifting..... 1
References..... 1
Common information..... 1
Preliminary requirements..... 2
Procedure..... 3
Requirements after job completion..... 6

List of tables

Page

1 References..... 1
2 Required conditions..... 2
3 Support equipment..... 2
4 Consumables, materials, and expendables..... 2
5 Spares..... 3
6 Required conditions..... 6

List of figures

Page

1 Aircraft with both main landing gears collapsed, missing, or retracted and one or both engines missing - Lifting..... 5

References

Table 1 References

Data Module/Technical Publication	Title
BD500-A-J07-10-00-00AAA-062A-A	Use of jacks - Standard support equipment and tools
BD500-A-J07-12-00-00AAA-062A-A	Use of pneumatic lifting bags - Standard support equipment and tools

Common information

This data module gives the recovery procedure for the aircraft with both the Main Landing Gear (MLG) retracted, collapsed, or missing.

Preliminary requirements

Required conditions

Table 2 Required conditions

Action/Condition	Data Module/Technical publication
Make sure that the aircraft is in level attitude.	
Make sure that the maximum fuel is removed to obey with the weight and balance problems and maximum possible lifting loads.	
Make sure that the weight and balance is calculated for the missing engine/engines.	
Make sure that the tail tip protection is given.	
Make sure that the aircraft rest on the outboard lower wing of the wing missing an engine. If both the engines are missing, the aircraft can rest on an outboard wing in which direction the aircraft roll. The aircraft can also rest on the center fuselage mid wing fairing.	

Support equipment

Table 3 Support equipment

Name	Identification/Reference	Quantity	Remark
None			

Consumables, materials, and expendables

Table 4 Consumables, materials, and expendables

Name	Identification/Reference	Quantity	Remark
None			

Spares

Table 5 Spares

Name	Identification/Reference	Quantity	Remark
None			

Safety conditions

None

Procedure

CAUTION

You must do the lateral leveling before you do the longitudinal leveling.

1 Recovery procedure

Refer to Fig. 1 .

There can be 6 in. (152.40 mm) crush damage to one or both outboard wing lower surfaces, one or both engine nose cowls, and the center wing fairing.

1.1 Level the aircraft along the lateral axis as follows:

1.1.1 Level the aircraft with the pneumatic bags as follows:

Refer to BD500-A-J07-12-00-00AAA-062A-A.

Note

You must put the aircraft on the jack or the shore the aircraft after it is lifted to sufficient height.

Note

If the pneumatic bags cover the wing jack point, it is necessary to move the aircraft before you start the work on the landing gear.

1.1.1.1 Install the pneumatic bags between the RIB3 and RIB7 below each wing.

1.1.1.2 Level the aircraft along the lateral axis.

1.1.2 Level the aircraft with the jack as follows:

Refer to BD500-A-J07-10-00-00AAA-062A-A.

Note

You must put the aircraft on jack after the aircraft lifted to sufficient height.

1.1.2.1 Install the jacks below each wing.

1.1.2.2 Level the aircraft along the lateral axis.

1.1.3 You can also level and lift the aircraft from the engine pylon before the removal of air bags to give access to the wing jack point.

Note
The pylon must be examined to make sure that it can hold the possible lifting loads.

1.2 Level and lift the aircraft along the longitudinal axis as follows:

1.2.1 Level and lift the aircraft with the pneumatic bags as follows:
Refer to BD500-A-J07-12-00-00AAA-062A-A.

1.2.1.1 Install the pneumatic bags below the forward fuselage.

Note
The fuselage skin pressure must not exceed 5 psi (34.47 kPa).

1.2.1.2 Monitor the maximum skin pressure.

1.2.1.3 Lift the aircraft to the height, necessary to install the nose towing dolly with a turntable and the support trailer.

1.2.2 Level and lift the aircraft with the jack as follows:
Refer to BD500-A-J07-10-00-00AAA-062A-A.

Note
You must put the aircraft on jack after the aircraft lifted to sufficient height.

1.2.2.1 Install the jacks below the forward fuselage.

1.2.2.2 Lift the aircraft to the height, necessary to extend the Nose Landing Gear (NLG).

1.2.2.3 Lift the aircraft to the height, necessary to install the nose towing dolly with a turntable and the support trailer.

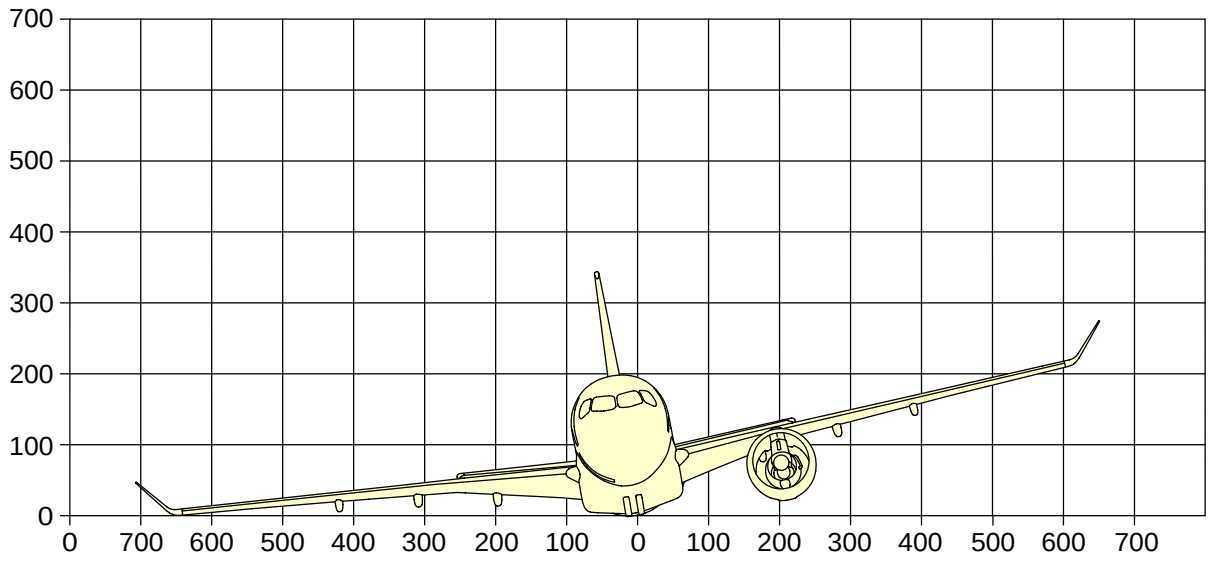

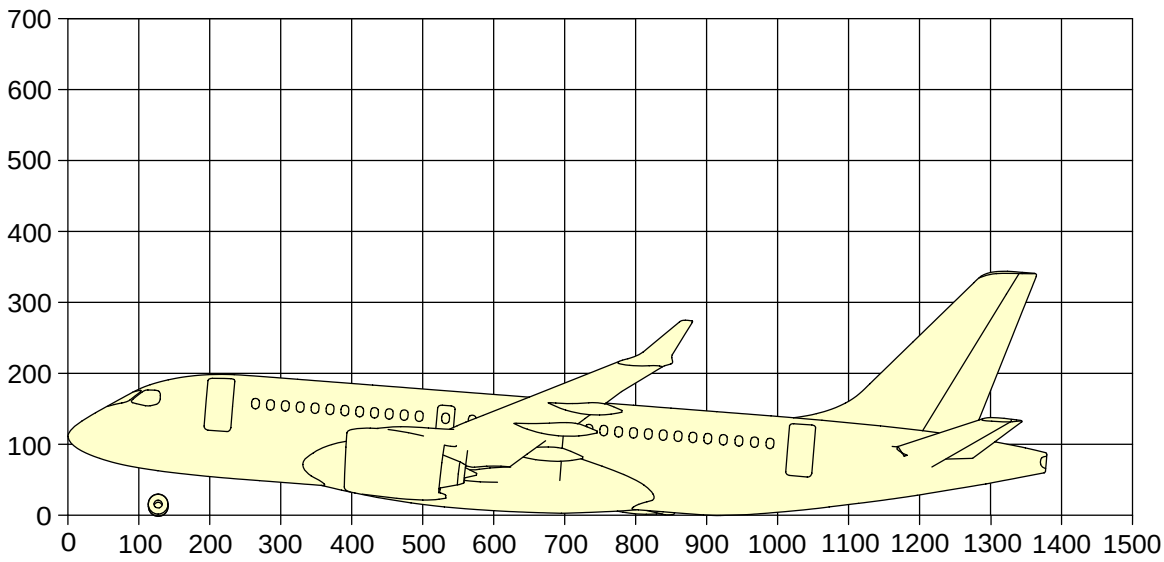

NOTE

1 square equals to 100 inches.

ICN-BD500-A-J071200-C-3AB48-30734-A-001-01

Figure 1 Aircraft with both main landing gears collapsed, missing, or retracted and one or both engines missing - Lifting

Requirements after job completion

Required conditions

Table 6 Required conditions

Action/Condition	Data Module/Technical publication
Make sure that the aircraft is back to the hard surface or repair section.	
Record all the paperwork including procedures to recover the aircraft, loads applied, list of removed parts, and other requirements.	
This data must give to the inspection or repair section to help the aircraft return to service.	

Tail tip incident - Lifting

Applicability: 50001-54999, 55001-59999

Table of contents

Page

Tail tip incident - Lifting..... 1
References..... 1
Common information..... 1
Preliminary requirements..... 1
Procedure..... 3
Requirements after job completion..... 6

List of tables

Page

1 References..... 1
2 Required conditions..... 1
3 Support equipment..... 2
4 Consumables, materials, and expendables..... 2
5 Spares..... 2
6 Required conditions..... 6

List of figures

Page

1 Tail tip incident - Lifting..... 5

References

Table 1 References

Data Module/Technical Publication	Title
BD500-A-J07-12-00-00AAA-062A-A	Use of pneumatic lifting bags - Standard support equipment and tools
BD500-A-J07-30-00-00AAA-062A-A	Use of cranes - Standard support equipment and tools

Common information

This data module gives the recovery procedure for the aircraft with crush damage to the aft lower fuselage.

Preliminary requirements

Required conditions

Table 2 Required conditions

Action/Condition	Data Module/Technical publication
Make sure that the aircraft is in level attitude.	

Action/Condition	Data Module/Technical publication
Make sure that the maximum fuel is removed to obey with the weight and balance problems and maximum possible lifting loads.	
Make sure that the weight and balance is calculated.	
Make sure that the nose down tip protection is given.	
Make sure that the aircraft rest on the aft lower fuselage.	

Support equipment

Table 3 Support equipment

Name	Identification/Reference	Quantity	Remark
None			

Consumables, materials, and expendables

Table 4 Consumables, materials, and expendables

Name	Identification/Reference	Quantity	Remark
None			

Spares

Table 5 Spares

Name	Identification/Reference	Quantity	Remark
None			

Safety conditions

None

Procedure

CAUTION

You must do the lateral leveling before you do the longitudinal leveling.

1 Recovery procedure

There can be 6 in. (152.40 mm) possible crush damage to the aft lower fuselage.

Refer to Fig. 1 .

1.1 Level the aircraft along the longitudinal axis as follows:

1.1.1 Level the aircraft with the slings as follows:

Refer to BD500-A-J07-30-00-00AAA-062A-A.

1.1.1.1 Use a load balancing sling assembly around the aft fuselage to lift the aft fuselage.

1.1.1.2 If necessary, Remove the different antenna.

1.1.1.3 Use a load balancing sling assembly around the forward fuselage to hold the forward fuselage because the rear fuselage is lifted.

1.1.2 Level the aircraft with the pneumatic bags as follows:

Refer to BD500-A-J07-12-00-00AAA-062A-A.

Note

You must put the aircraft on the jack or the shore the aircraft after it is lifted to sufficient height.

Note

If the pneumatic bags cover the wing jack point, it is necessary to move the aircraft before you start the work on the landing gear.

Note

The skin pressure must not exceed 5 psi (34.47 kPa).

1.1.2.1 Install the pneumatic bags below the aft fuselage to lift the aft fuselage.

1.1.2.2 Install the pneumatic bags below the forward fuselage to hold the forward fuselage because the rear fuselage is lifted.

Note

The skin pressure must not exceed 5 psi (34.47 kPa).

1.1.2.3 Monitor the maximum skin pressure.

1.1.2.4 If necessary, Remove the different antenna.

1.1.2.5 Lift the aircraft to the height, necessary to extend the landing gear.

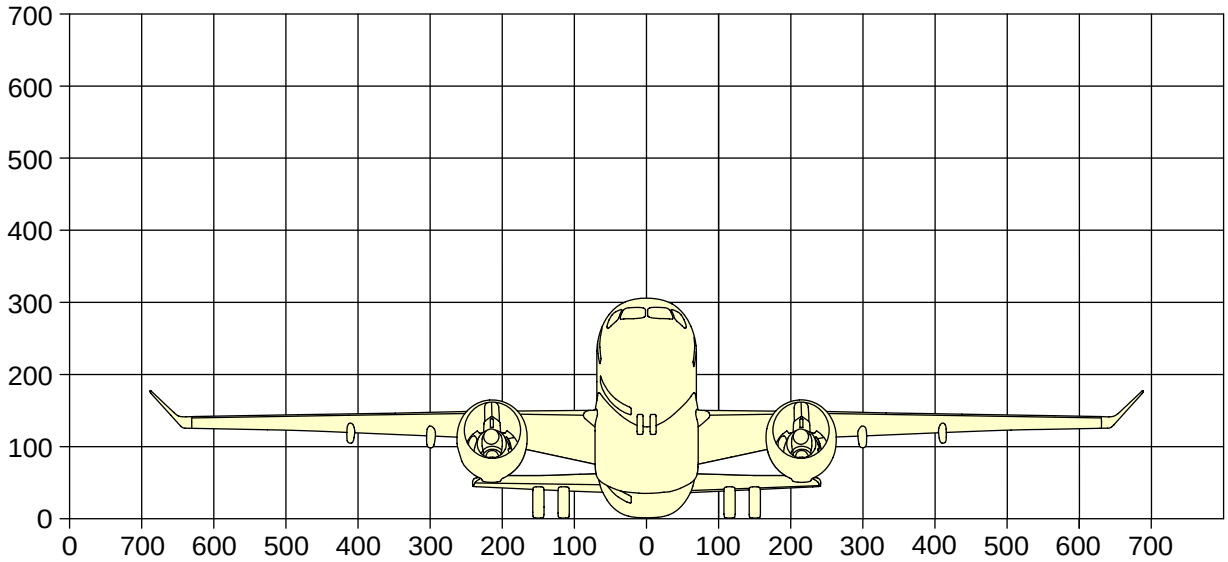

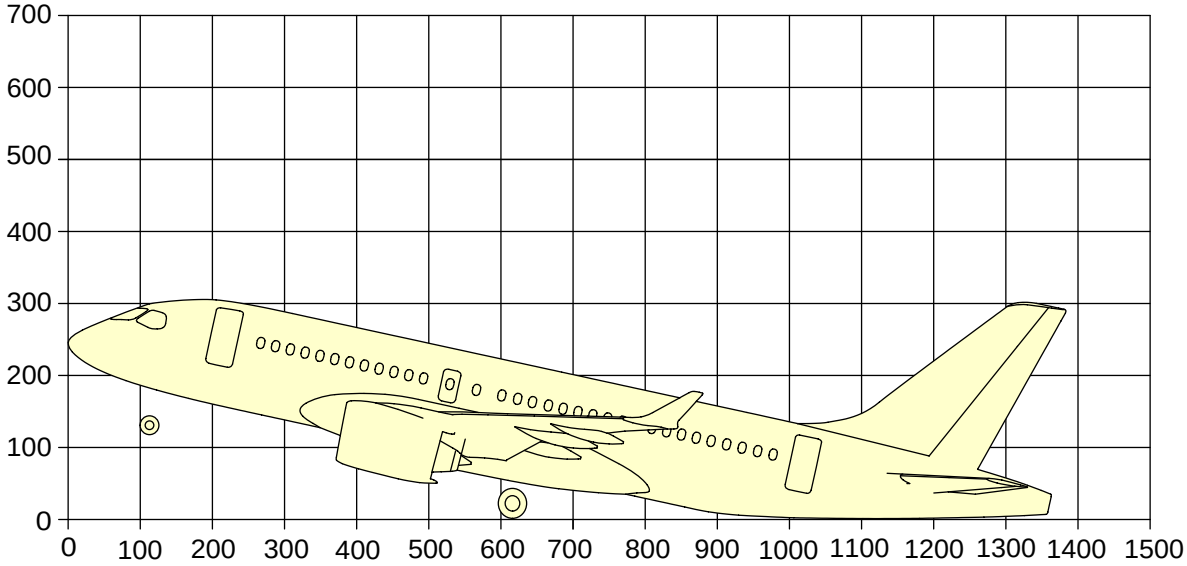

NOTE

1 square equals to 100 inches.

ICN-BD500-A-J071200-C-3AB48-30659-A-001-01

Figure 1 Tail tip incident - Lifting

Requirements after job completion

Required conditions

Table 6 Required conditions

Action/Condition	Data Module/Technical publication
Make sure that the aircraft is back to the hard surface or repair section.	
Record all the paperwork including procedures to recover the aircraft, loads applied, list of removed parts, and other requirements.	
This data must give to the inspection or repair section to help the aircraft return to service.	

Leveling and lifting - General

Applicability: 50001-54999, 55001-59999

Table of contents

Page

Leveling and lifting - General 1
References 1
Description 2
1 Introduction 2
2 Recovery procedure 2
3 Leveling 3
4 Lifting 3
5 Leveling and lifting scenarios 4

List of tables

Page

1 References 1
2 Leveling and lifting scenarios 4

References

Table 1 References

Data Module/Technical Publication	Title
BD500-A-J07-10-00-00AAA-062A-A	Use of jacks - Standard support equipment and tools
BD500-A-J07-30-00-00AAA-062A-A	Use of cranes - Standard support equipment and tools
BD500-A-J07-12-00-00AAA-062A-A	Use of pneumatic lifting bags - Standard support equipment and tools
BD500-A-J08-20-00-01AAA-913A-A	Leveling of the aircraft - General maintenance procedure
BD500-A-J07-12-00-01AAA-171A-A	Aircraft with nose landing gear retracted, collapsed, or missing - Lifting
BD500-A-J07-12-00-02AAA-171A-A	Aircraft with nose landing gear retracted, collapsed, or missing with one or both engines missing - Lifting
BD500-A-J07-12-00-03AAA-171A-A	Aircraft with nose landing gear and one main landing gear collapsed, missing or retracted - Lifting
BD500-A-J07-12-00-04AAA-171A-A	Aircraft with nose landing gear and one main landing gear collapsed, missing, or retracted and one or both engines missing - Lifting
BD500-A-J07-12-00-05AAA-171A-A	Aircraft with one main landing gear collapsed, missing, or retracted - Lifting
BD500-A-J07-12-00-06AAA-171A-A	Aircraft with one main landing gear collapsed, missing, or retracted and one or both engines missing - Lifting

Data Module/Technical Publication	Title
BD500-A-J07-12-00-07AAA-171A-A	Aircraft with all landing gears collapsed, missing, or retracted - Lifting
BD500-A-J07-12-00-08AAA-171A-A	Aircraft with all landing gears collapsed, missing, or retracted and one or both engines missing - Lifting
BD500-A-J07-12-00-09AAA-171A-A	Aircraft with both main landing gears collapsed, missing, or retracted - Lifting
BD500-A-J07-12-00-10AAA-171A-A	Aircraft with both main landing gears collapsed, missing, or retracted and one or both engines missing - Lifting
BD500-A-J07-12-00-11AAA-171A-A	Tail tip incident - Lifting

Description

1 Introduction

Start the levelling or lifting operation after the full analysis of the incident, because each aircraft recovery incident is unique.

The basic requirement of leveling and lifting the aircraft is to level and lift the aircraft to a height necessary for the steps that follow:

- Install the jacks
- Extend, repair, or replace the landing gears
- Install the recovery vehicle.

The steps that follow are necessary before you start the leveling or lifting operation:

- Make sure that the investigation authorities have released the aircraft.
- Resolve all the health and safety issues.
- Calculate the aircraft weight and center of gravity.
- Make sure that the aircraft is stable.
- Resolve all weight reduction problems.
- Make sure that the necessary equipment and personnel are available.

2 Recovery procedure

During aircraft recovery, it is important to do lateral leveling before doing longitudinal leveling.

There are three general procedures to level or lift the aircraft. They are as follows:

- Use of jacks. Refer to BD500-A-J07-10-00-00AAA-062A-A.
- Use of cranes. Refer to BD500-A-J07-30-00-00AAA-062A-A.
- Use of pneumatic lifting bags. Refer to BD500-A-J07-12-00-00AAA-062A-A.

Note

It can be necessary to level or lift the aircraft with the step-by-step combination of these three procedures.

Make sure that the lifting device can follow the maximum travel range in all directions. The device that you use must hold the loads on the transverse displacements. You must use a lifting device which you can apply a minimum of 150% of the necessary load.

- With Jacks, there is a risk of bending or rupture of the jack.
- With pneumatic lifting, there is a risk of shear fracture of the bag.

The load applied on the jacking points or on the contact area of the pneumatic lifting bag must not be more than the maximum allowable load. The leveling must be linear and soft.

The description of each scenario has the illustrations that follows:

- The aircraft attitude with the pitch and roll angles that coordinates of the contact points.
- The clearances for the different procedures to level or lift the aircraft.
- The arc movement related to the procedure used to lift the aircraft.

Note

For the longitudinal movement, the negative sign is related to forward displacement and for the lateral movement, the negative sign is related to inboard displacement.

3 Leveling

Do the levelling of the aircraft as follow. Refer to BD500-A-J08-20-00-01AAA-913A-A.

4 Lifting

When the aircraft is correctly levelled, lift the aircraft to the height that is necessary to do the steps that follow:

- Extend and lock a retracted landing gear
- Put the jacks in position while work is carried out on the landing gear that includes the landing gear replacement
- Put the special aircraft recovery vehicles below the wings or fuselage.

If the lifting equipment cannot lift the aircraft to the necessary height in a single step, then lift the aircraft in different steps that follow:

- Get the support thru shoring or cradles, while changing the position of the lifting equipment.
- For more lift, build a platform below the jack or the pneumatic lifting device.
- When the maximum arc movement is reached during lifting with jacks, change the position of the jacks after shoring. Calculate and monitor the approved shoring loads during the shoring operations.

There are different types of devices used to level and lift the damaged aircraft. The accepted devices include jacks, pneumatic lifting devices, cranes and slings. If necessary, use the combination of these devices to level and lift the damaged aircraft successfully.

5 Leveling and lifting scenarios

There are 11 leveling and lifting scenarios.

For more information, refer to Table 2 .

Table 2 Leveling and lifting scenarios

Scenarios	Aircraft Attitude	Engines	References
1.1	Nose Landing Gear (NLG) unserviceable	On Aircraft	BD500-A-J07-12-00-01AAA-171A-A
1.2	NLG unserviceable	Both left side and right side engines missing	BD500-A-J07-12-00-02AAA-171A-A
2.1	NLG and one Main Landing Gear (MLG) unserviceable	On aircraft	BD500-A-J07-12-00-03AAA-171A-A
2.2	NLG and one MLG unserviceable	One or both engines missing	BD500-A-J07-12-00-04AAA-171A-A
3.1	One MLG unserviceable	On aircraft	BD500-A-J07-12-00-05AAA-171A-A
3.2	One MLG unserviceable	One or both engines missing	BD500-A-J07-12-00-06AAA-171A-A
4.1	Both NLG and MLG unserviceable	On aircraft	BD500-A-J07-12-00-07AAA-171A-A
4.2	Both NLG and MLG unserviceable	One or both engines missing	BD500-A-J07-12-00-08AAA-171A-A
5.1	MLG unserviceable	On aircraft	BD500-A-J07-12-00-09AAA-171A-A
5.2	MLG unserviceable	One or both engines missing	BD500-A-J07-12-00-10AAA-171A-A
6	Tail tip incident	On aircraft	BD500-A-J07-12-00-11AAA-171A-A

Jacking loads for ARP (A220-100) - Technical data

Applicability: 50001-54999

Table of contents

Page

Jacking loads for ARP (A220-100) - Technical data..... 1
References..... 1
Description..... 1
1 Introduction..... 1
2 Jacking points location..... 1
3 Calculation of jack loads..... 2

List of tables

Page

1 References..... 1
2 Jacking points location..... 1

List of figures

Page

1 Jacking loads calculation..... 3
2 wing Jacking loads calculation..... 5

References

Table 1 References

Data Module/Technical Publication	Title
None	

Description

1 Introduction

This data module gives the calculation of jacking loads for Airbus A220-100 aircraft.

2 Jacking points location

This section gives the jacking points location.

Table 2 Jacking points location

Jack position	A220-100		
	X FS in. (m)	Y BL in. (m)	Z WL in. (m)
Fwd fuselage	480 (12.19)	0.0 (0.00)	97.9 (2.49)
Left Wing	889.3 (22.59)	-203 (-5.20)	140.2 (3.56)
Right Wing	889.3 (22.59)	203 (5.20)	140.2 (3.56)

3 Calculation of jack loads

This section gives the calculation of jacking loads at fwd fuselage, left and right wing jacking points.

Refer to Fig. 1 , for the indication of jacking points and corresponding jacking loads (observer nose and aircraft nose same direction).

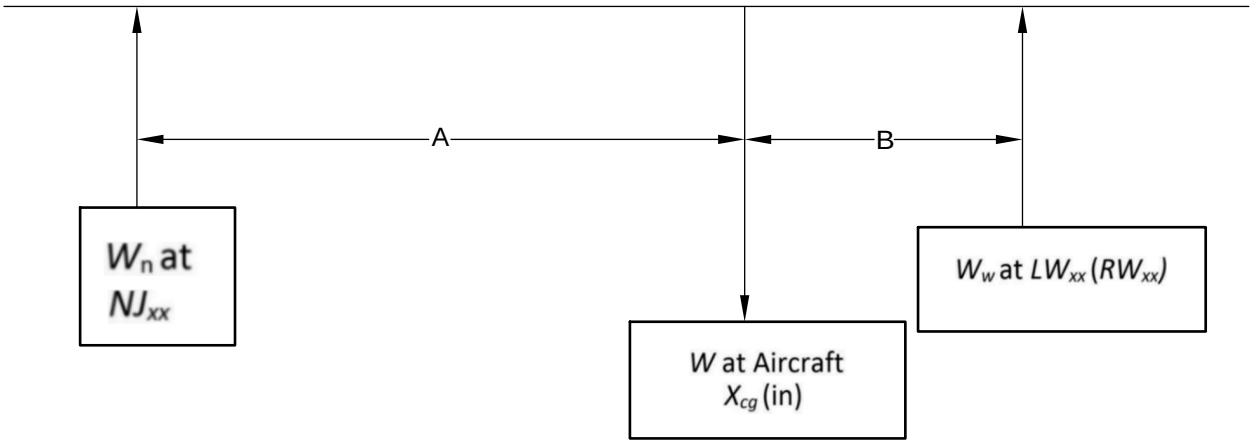

ICN-BD500-A-J074000-C-3AB48-58332-A-001-01

Figure 1 Jacking loads calculation

From the Fig. 1 ,

- The jacking load at forward fuselage jacking point can be calculated by the formula **Wn = (W * B) / (B + A)**
- The jacking load at left and right wing jacking point can be calculated by the formula **Ww = W - Wn**.

Where

Wn = Jacking load at forward fuselage.

W = Weight at aircraft Xcg.

Ww = Jacking load at wings (left and right).

A = Distance from forward fuselage jacking point to CG about X- axis.

B = Distance from CG about X- axis to left wing jacking point.

Example: 1

W as calculated from NRW calculation = 135000 lb.

Xcg as calculated from NRW calculation = 859.6 in.

NJxx from Table 2 = 480.0 in.

LWxx from Table 2 = 889.3 in.

A = 859.6 − 480.0 = 379.6 in.

B = 889.3 − 859.6 = 29.7 in.

Wn = (135000 * 29.7) / (29.7 + 379.6) = 9796 lb.

Jacking load at forward fuselage jacking point (Wn) = 9796 lb.

Example: 2

Using the Wn value from the example 1, we can calculate wing jacking load ‘Ww’ as follows:

Ww = 135000 − 9796 = 125204 lb.

Jacking load at wing (Ww) = 125204 in.

The result of example 2 is the sum of jacking loads at left and right wings.

If we half the Ww value from the example 2, the jacking load at left and right wing can be found. But, this is only valid if no significant components with large Ycg have been detached such as engine, pylon, or outboard wing section.

If the components with large Ycg are not removed, the asymmetric loading on the wing jacking points can be calculated as follows:

Refer to Fig. 2 for the indication of left and right wing jacking points and corresponding jacking loads.

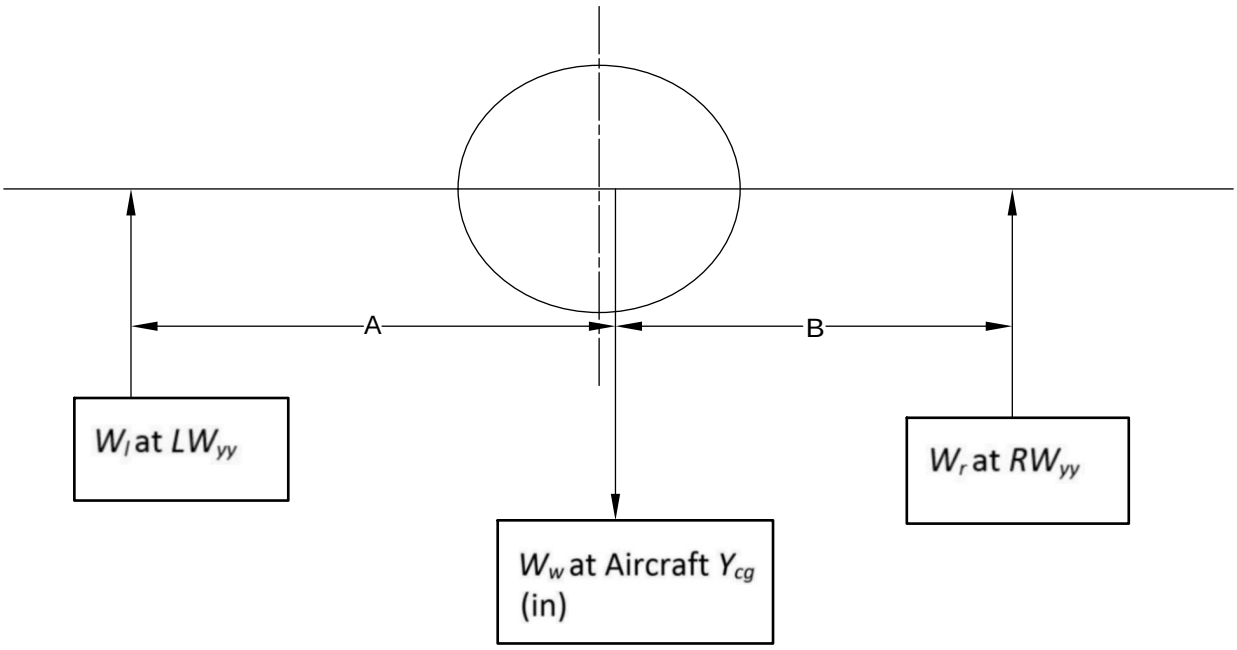

ICN-BD500-A-J074000-C-3AB48-58333-A-001-01

Figure 2 wing Jacking loads calculation

From the Fig. 2 ,

- The jacking load at left wing jacking point can be calculated by the formula **Wl = (Ww * B) / (B + A)**
- The jacking load at right wing jacking point can be calculated by the formula **Wr = Ww - Wl**.

Where

Wl = Jacking load at left wing.

Ww = Weight at aircraft Ycg.

Wr = Jacking load at right wing.

A = Distance from left wing jacking point to CG about Y- axis.

B = Distance from CG about Y- axis to right wing jacking point.

Example: 3

Ycg as determined from NRW calculation = 1.25 in.

LWyy and RWyy as determined from Table 2 = 203.0 in.

From example 2, Ww = 125204 lb.

A = 203 + 1.25 = 204.25

B = 203 - 1.25 = 201.75

Wl = (125204 * 201.75) / (201.75 + 204.25) = 62217 lb.

Jacking load at left wing (Wl) = 62217 lb.

Example: 4

Using the Ww and Wl, we can caluculate Wr as follows:

Wr = 125204 − 62217 = 62987 lb.

Jacking load at right wing (Wr) = 62987 lb.

Jacking loads for ARP (A220-300) - Technical data

Applicability: 55001-59999

Table of contents

Page

Jacking loads for ARP (A220-300) - Technical data..... 1
References..... 1
Description..... 1
1 Introduction..... 1
2 Jacking points location..... 1
3 Calculation of jack loads..... 2

List of tables

Page

1 References..... 1
2 Jacking points location..... 1

List of figures

Page

1 Jacking loads calculation..... 3
2 wing Jacking loads calculation..... 5

References

Table 1 References

Data Module/Technical Publication	Title
None	

Description

1 Introduction

This data module gives the calculation of jacking loads for the Airbus A220-300 aircraft.

2 Jacking points location

This section gives the jacking points location.

Table 2 Jacking points location

Jack position	A220-300		
	X FS in. (m)	Y BL in. (m)	Z WL in. (m)
Fwd fuselage	396 (10.06)	0.0 (0.00)	97.9 (2.49)
Left Wing	889.3 (22.59)	-203 (-5.20)	140.2 (3.56)
Right Wing	889.3 (22.59)	203 (5.20)	140.2 (3.56)

3 Calculation of jack loads

This section gives the calculation of jacking loads at fwd fuselage, left and right wing jacking points.

Refer to Fig. 1 , for the indication of jacking points and corresponding jacking loads (observer nose and aircraft nose same direction).

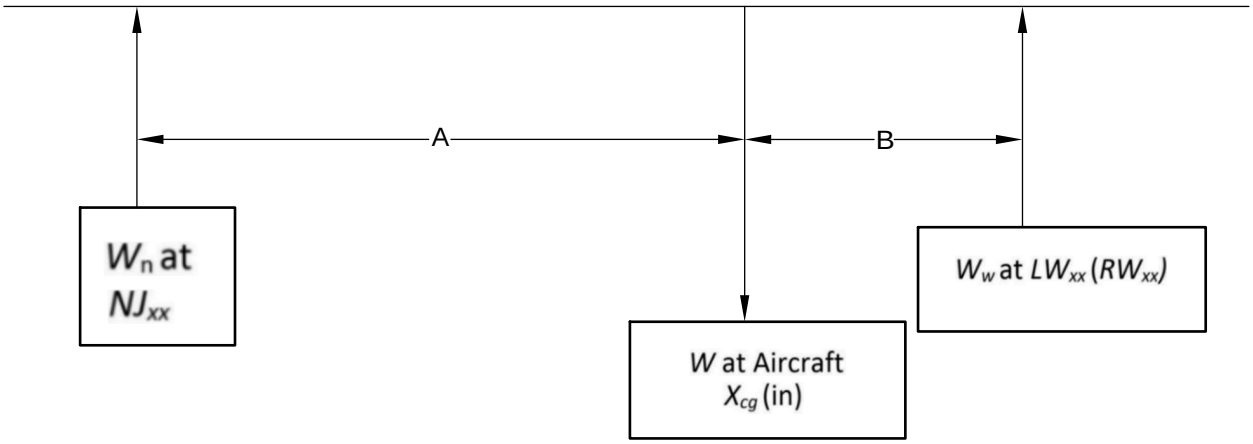

ICN-BD500-A-J074000-C-3AB48-58332-A-001-01

Figure 1 Jacking loads calculation

From the Fig. 1 ,

- The jacking load at forward fuselage jacking point can be calculated by the formula **Wn = (W * B) / (B + A)**
- The jacking load at left and right wing jacking point can be calculated by the formula **Ww = W - Wn**.

Where

Wn = Jacking load at forward fuselage.

W = Weight at aircraft Xcg.

Ww = Jacking load at wings (left and right).

A = Distance from forward fuselage jacking point to CG about X- axis.

B = Distance from CG about X- axis to left wing jacking point.

Example: 1

W as calculated from NRW calculation = 135000 lb.

Xcg as calculated from NRW calculation = 859.6 in.

NJxx from Table 2 = 480.0 in.

LWxx from Table 2 = 889.3 in.

A = 859.6 − 480.0 = 379.6 in.

B = 889.3 − 859.6 = 29.7 in.

Wn = (135000 * 29.7) / (29.7 + 379.6) = 9796 lb.

Jacking load at forward fuselage jacking point (Wn) = 9796 lb.

Example: 2

Using the Wn value from the example 1, we can calculate wing jacking load ‘Ww’ as follows:

Ww = 135000 − 9796 = 125204 lb.

Jacking load at wing (Ww) = 125204 in.

The result of example 2 is the sum of jacking loads at left and right wings.

If we half the Ww value from the example 2, the jacking load at left and right wing can be found. But, this is only valid if no significant components with large Ycg have been detached such as engine, pylon, or outboard wing section.

If the components with large Ycg are not removed, the asymmetric loading on the wing jacking points can be calculated as follows:

Refer to Fig. 2 for the indication of left and right wing jacking points and corresponding jacking loads.

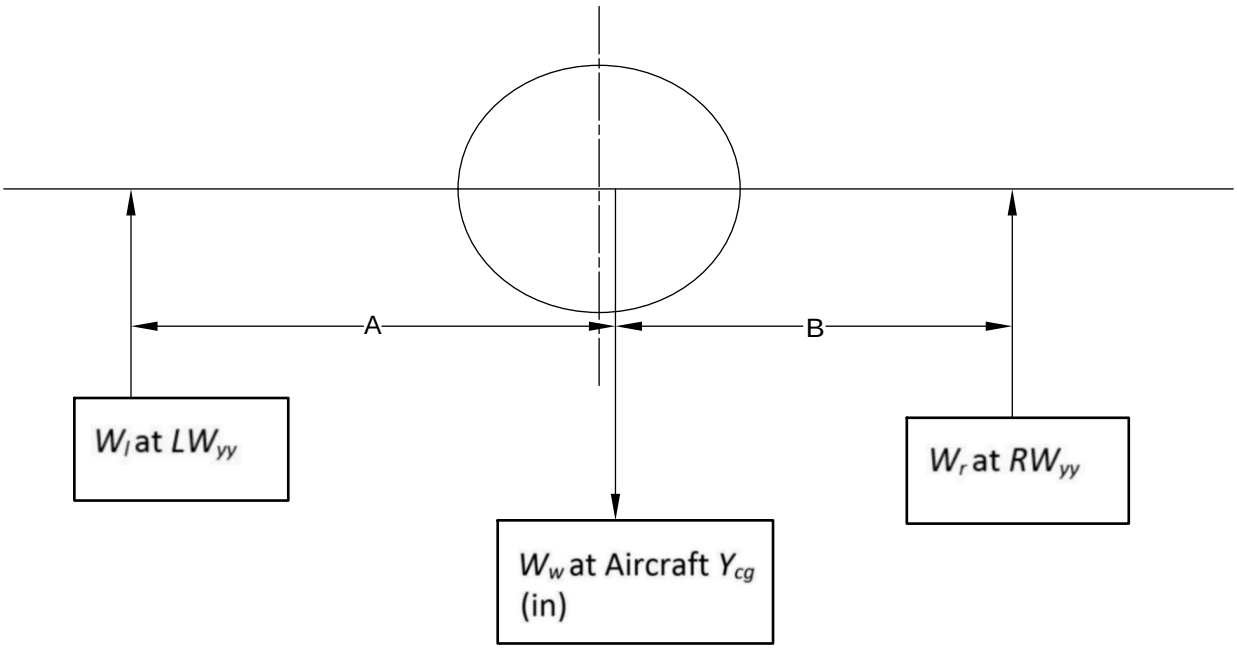

ICN-BD500-A-J074000-C-3AB48-58333-A-001-01

Figure 2 wing Jacking loads calculation

From the Fig. 2 ,

- The jacking load at left wing jacking point can be calculated by the formula **Wl = (Ww * B) / (B + A)**
- The jacking load at right wing jacking point can be calculated by the formula **Wr = Ww - Wl**.

Where

Wl = Jacking load at left wing.

Ww = Weight at aircraft Ycg.

Wr = Jacking load at right wing.

A = Distance from left wing jacking point to CG about Y- axis.

B = Distance from CG about Y- axis to right wing jacking point.

Example: 3

Ycg as determined from NRW calculation = 1.25 in.

LWyy and RWyy as determined from Table 2 = 203.0 in.

From example 2, Ww = 125204 lb.

A = 203 + 1.25 = 204.25

B = 203 - 1.25 = 201.75

Wl = (125204 * 201.75) / (201.75 + 204.25) = 62217 lb.

Jacking load at left wing (Wl) = 62217 lb.

Example: 4

Using the Ww and Wl, we can caluculate Wr as follows:

Wr = 125204 − 62217 = 62987 lb.

Jacking load at right wing (Wr) = 62987 lb.

Towing with deflated tires - Debogging

Applicability: 50001-54999, 55001-59999

Table of contents

Page

Towing with deflated tires - Debogging..... 1
References..... 1
Common information..... 1
Preliminary requirements..... 1
Procedure..... 2
Requirements after job completion..... 3

List of tables

Page

1 References..... 1
2 Required conditions..... 2
3 Support equipment..... 2
4 Consumables, materials, and expendables..... 2
5 Spares..... 2
6 Required conditions..... 3

References

Table 1 References

Data Module/Technical Publication	Title
BD500-A-J09-13-00-02AAA-179A-A	Towing from the main gear - Debogging

Common information

This data modules gives the procedure to tow the aircraft when one or more tires is flat and it is not possible to replace all of the flat tires.

Preliminary requirements

Production maintenance data

Zones	711	Nose landing gear
	731	Main landing gear, left side
	741	Main landing gear, right side

Required conditions

Table 2 Required conditions

Action/Condition	Data Module/Technical publication
None	

Support equipment

Table 3 Support equipment

Name	Identification/Reference	Quantity	Remark
None			

Consumables, materials, and expendables

Table 4 Consumables, materials, and expendables

Name	Identification/Reference	Quantity	Remark
None			

Spares

Table 5 Spares

Name	Identification/Reference	Quantity	Remark
None			

Safety conditions

None

Procedure

1 It is possible to tow the aircraft with one or more flat tires. You can tow the aircraft when:

1.1 One tire is completely flat on one or on the two Main Landing Gear (MLG).

1.2 When one Nose Landing Gear (NLG) tire is completely flat.

Note

A minimum of one tire of each LG must be in good condition and set with the correct pressure.

1.3 Follow these conditions:

- Make sure that there are no persons in the aircraft.
- The aircraft must be as light as possible to decrease the loads applied to the LG.
- The maximum towing speed is a walking speed of 7 km/h .

1.4 For more information how to tow the aircraft, refer to BD500-A-J09-13-00-02AAA-179A-A.

Requirements after job completion

Required conditions

Table 6 Required conditions

Action/Condition	Data Module/Technical publication
None	

Intentionally left blank

Moving the aircraft

Intentionally left blank

Towing safety precautions - General maintenance safety procedure

Applicability: 50001-54999, 55001-59999

Table of contents

Page

Towing safety precautions - General maintenance safety procedure..... 1
References..... 1
Common information..... 2
Preliminary requirements..... 3
Procedure..... 4
Requirements after job completion..... 10

List of tables

Page

1 References..... 1
2 Required conditions..... 3
3 Support equipment..... 3
4 Consumables, materials, and expendables..... 3
5 Spares..... 4
6 Required conditions..... 10

List of figures

Page

1 Towing safety precautions - General maintenance safety procedure..... 8

References

Table 1 References

Data Module/Technical Publication	Title
BD500-A-J52-11-00-01AAA-740A-A	Forward Passenger Door (FPD) - Close after access procedure
BD500-A-J52-12-00-01AAA-740A-A	Aft Passenger Door (APD) - Close after access procedure
BD500-A-J52-45-00-01AAA-740A-A	Forward Service Door (FSD) - Close after access procedure
BD500-A-J52-46-00-01AAA-740A-A	Aft Service Door (ASD) - Close after access procedure
BD500-A-J52-21-00-01AAA-740A-A	Overwing Emergency Exit Door (OWEED) - Close after access procedure
BD500-A-J52-30-00-01AAA-740A-A	Cargo compartment door - Close after access procedure
BD500-A-J05-51-17-01AAA-284A-A	Nose Landing Gear (NLG) towing angle exceeded - Special irregular inspection

Common information

This data module gives the technical precautions that you must follow when you do the towing operation of the aircraft.

To ensure clarity in the procedure, refer to towing definitions that follow:

Pushback towing	Moving a fully loaded aircraft (passengers, cargo and fuel) from the parking position to the taxiway. Movement includes; pushback with turn, a stop, and short tow forward to align aircraft nose wheels. Engines may, or may not, be operating.
Maintenance towing	The movement of an aircraft for maintenance/remote parking purposes. Maintenance towing consists typically of many starts, stops, turns, accelerations and braking. Aircraft is typically unloaded.
Dispatch towing	Towing a revenue aircraft, loaded with passengers, fuel and cargo up to Maximum Ramp Weight (MRW), from the terminal gate/remote parking area, to a location near the active runway, or conversely. The movement may cover several kilometers (miles) with speed up to 32 km/h (20 mph), with several starts, stops and turns. It replaces typical taxiing prior to take-off and landing. Tow bar and towbarless towing are allowed for pushback and maintenance towing and not accepted for dispatch towing.
Hangar/ Parking towing	Hangar/Parking towing consists typically in small and accurate displacements aircraft for hangar storage and space saving purpose. Aircraft is typically unloaded and manipulated at low speed on short distances.

The steering ranges are the following:

- Active steering range is ±80 degrees
- Passive steering range is ±130 degrees.

A NOSE STEER MISALGN caution message will appear on the Engine Indication and Crew Alerting System (EICAS), if the steering angle exceeds the active steering range of ±80 degrees providing indication that steering is not in position to initiate taxi operation.

A NOSE STEER FAIL caution message will appear on the EICAS if the over steer target is broken while towing. This condition is the consequence of a steering angle that exceeds the passive steering range of ±130 degrees. The rupture of the proximity sensor target occurs when the steering angle exceeds approximately ±135 degrees.

Preliminary requirements

Required conditions

Table 2 Required conditions

Action/Condition	Data Module/Technical publication
Make sure that the aircraft is safe for maintenance.	
Make sure that the Forward Passenger Door (FPD) is closed	BD500-A-J52-11-00-01AAA-740A-A
Make sure that the Aft Passenger Door (APD) is closed	BD500-A-J52-12-00-01AAA-740A-A
Make sure that the Forward Service Door (FSD) is closed	BD500-A-J52-45-00-01AAA-740A-A
Make sure that the Aft Service Door (ASD) is closed	BD500-A-J52-46-00-01AAA-740A-A
Make sure that the Overwing Emergency Exit Door (OWEED) is closed	BD500-A-J52-21-00-01AAA-740A-A
Make sure that the cargo compartment doors are closed.	BD500-A-J52-30-00-01AAA-740A-A

Support equipment

Table 3 Support equipment

Name	Identification/Reference	Quantity	Remark
None			

Consumables, materials, and expendables

Table 4 Consumables, materials, and expendables

Name	Identification/Reference	Quantity	Remark
None			

Spares

Table 5 Spares

Name	Identification/Reference	Quantity	Remark
None			

Safety conditions

None

Procedure

1 Obey all the towing safety precautions that follow:

1.1 For a safer towing operation, five persons are recommended at positions that follow:

- One person in the flight compartment to operate the aircraft brakes when uncoupling of the towing vehicle or aircraft occurs.
- One person to operate the towing vehicle.
- One person on the left wing tip and one person on the right wing tip to monitor clearance at turns.
- One person behind the tail to monitor clearance at turns.

1.2 All doors (FPD, APD, FSD, ASD, OWEED, cargo and avionics compartment doors) to be closed.

- If the aircraft is towed, for maintenance with a door, that can not be closed due to malfunction, reduce the towing speed to minimum.

1.3 Obey the precautions that follow when towing without tow bar:

1.3.1 Towbarless towing is allowed for pushback and maintenance towing and not accepted for dispatch towing.

Note

Refer to the common information section above for the different towing type definitions.

1.3.2 The towbarless vehicles must be approved by the Airbus.

1.3.3 Towing on uneven pavement is not permitted (step must not exceed 1 inch).

1.3.4 The towing vehicle must be in good condition before towing operation.

1.3.5 Before towing, the Nose Landing Gear (NLG) shock strut must be confirmed to be in a serviceable condition (towing with a deflated shock strut might cause damage to the NLG).

1.3.6 Before towing, make sure that the tires are correctly inflated.

Note

- It is not permitted to tow an aircraft with a towbarless vehicle with any flat tire on the NLG.
- One flat tire per Main Landing Gear (MLG) is acceptable.

1.3.7 During towing operations, each person in the aircraft must be in a seat with seat belt fastened.

1.3.8 Be careful when you install the NLG into the towbarless vehicle clamping device.

1.3.9 The clamping device of the towing vehicle must be aligned with the NLG axis to avoid contact with the NLG torque links during aircraft capture.

1.3.10 Before installation of the strut-strap or installation of the NLG into the towbarless vehicle clamping device, make sure the aircraft is stable with aircraft park brake applied and/or main gear chocks.

1.3.11 During towing operation, keep turns as large as possible and make all changes to speed or direction slowly.

1.3.12 During towing operation, aircraft brakes or park brake must not be used to stop the aircraft unless there is an emergency. Aircraft braking can result in damage to the NLG and/or aircraft structure.

1.3.13 During towing operations, do not turn the NLG more than 130 degrees left or right of the center.

Note

Refer to the common information section above for the possible indications while towing and turning.

1.3.14 There are markings present on the NLG strut at 130 degrees from the center line to let the tug operator to clearly see the NLG turn limits.

1.3.15 If you turn the NLG 135 degrees and more, the over steering sensor will be activated and an EICAS message “NOSE STEER FAIL“ caution and an INFO message “32 NOSE STEER FAULT - OVERTRAVEL DET INOP“ will appear.

1.3.16 On the above condition, you must do a steering inspection/repair. Refer to BD500-A-J05-51-17-01AAA-284A-A.

1.3.17 The towbarless vehicle operator must obey all aural and visual warnings set by the vehicle in accordance with the manufacturer operating manual.

1.3.18 During towing, no abnormal vibration/instability should be induced on the NLG. If any occur, reduce towing speed as required.

1.3.19 Install ground lockpins for maintenance towing.

Note

Lockpins must be installed on the NLG and MLG.

1.3.20 Maximum speed for towing on forward direction is described in appendix for each tug. This maximum speed has to be lower depending the runway condition and taxiway condition.

1.3.21 Maximum speed for towing on rearward direction is 5 km/h (3 mph). This maximum speed has to be lower depending the runway condition and taxiway condition.

1.4 Obey the precautions that follow during towing with tow bar:

1.4.1 The aircraft must be towed with a tow bar only from the NLG towing fixture, the tow bar lug dimensions is per the standard AS1614 category I.

1.4.2 Tow bar towing is allowed for pushback and maintenance or hangar parking towing and not accepted for dispatch towing.

Note

Refer to the common information section above for the different towing type definitions.

1.4.3 Towing on uneven pavement is not permitted (step must not exceed 1 inch).

1.4.4 During towing operations, each person in the aircraft must be in a seat and the seat belt must be fastened.

1.4.5 During towing operation, aircraft brakes or park brake must not be used to stop the aircraft unless there is an emergency. Aircraft braking can result in damage to the NLG and/or aircraft structure.

1.4.6 Make sure that the flight compartment crew and ground crew or the tractor personnel can speak to each other.

1.4.7 During towing operation, keep turns as large as possible and make all changes to speed or direction slowly.

1.4.8 There are markings present on the NLG strut at 130 degrees from the center line to let the tug operator to clearly see the NLG turn limits.

1.4.9 If you turn the NLG 135 degrees and more, the over steering sensor will be activated and an EICAS message “NOSE STEER FAIL“ caution and an INFO message “32 NOSE STEER FAULT - OVERTRAVEL DET INOP“ will appear.

1.4.10 On the above condition, you must do a steering inspection/repair. Refer to BD500-A-J05-51-17-01AAA-284A-A.

1.4.11 During towing, no abnormal vibration/instability should be induced on the NLG. If any occur, reduce towing speed as required.

1.4.12 Install ground lockpins for maintenance towing.

Note

Lockpins must be installed on the NLG and MLG.

1.4.13 Maximum speed for towing on forward direction is 24 km/h (15 mph). This maximum speed has to be lower depending the runway condition and taxiway condition.

1.4.14 Maximum speed for towing on rearward direction is 5 km/h (3 mph). This maximum speed has to be lower depending the runway condition and taxiway condition.

1.4.15 Before towing, the NLG shock strut must be confirmed to be in a serviceable condition (towing with a deflated shock strut might cause damage to the NLG).

1.4.16 Tow bar towing is allowed with one flat tire per gear.

1.4.17 While towing the aircraft in wind conditions, obey the “Towing with tow bar - Wind speed limitations“ based on the ground quality. Refer to Fig. 1 .

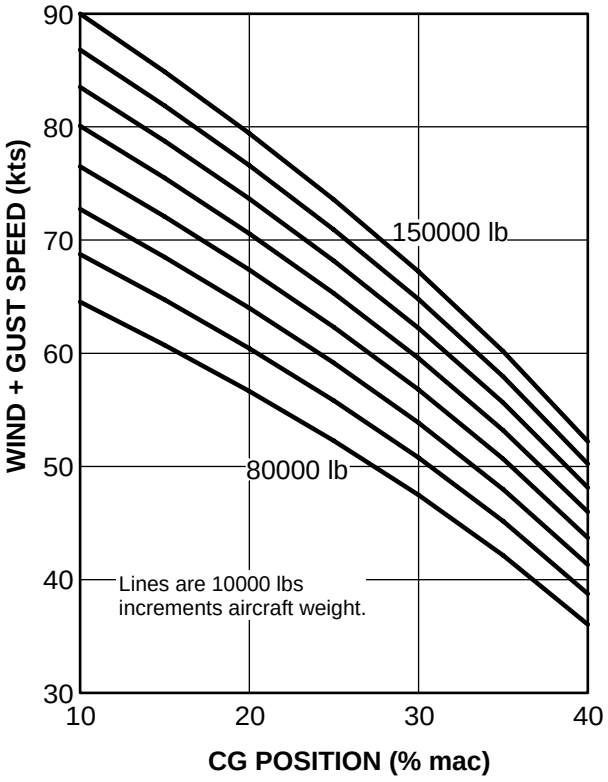

ON DRY CONCRETE OR ASPHALT

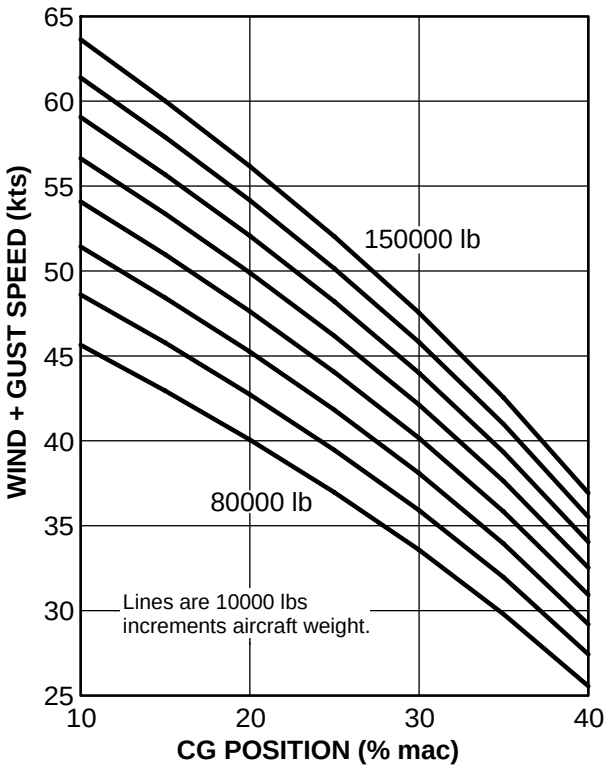

ON WET CONCRETE OR ASPHALT

MAXIMUM WIND + GUST FOR TOWING

ICN-BD500-A-J091100-C-3AB48-48150-A-001-01

Figure 1 Towing safety precautions - General maintenance safety procedure - (Sheet 1 of 2)

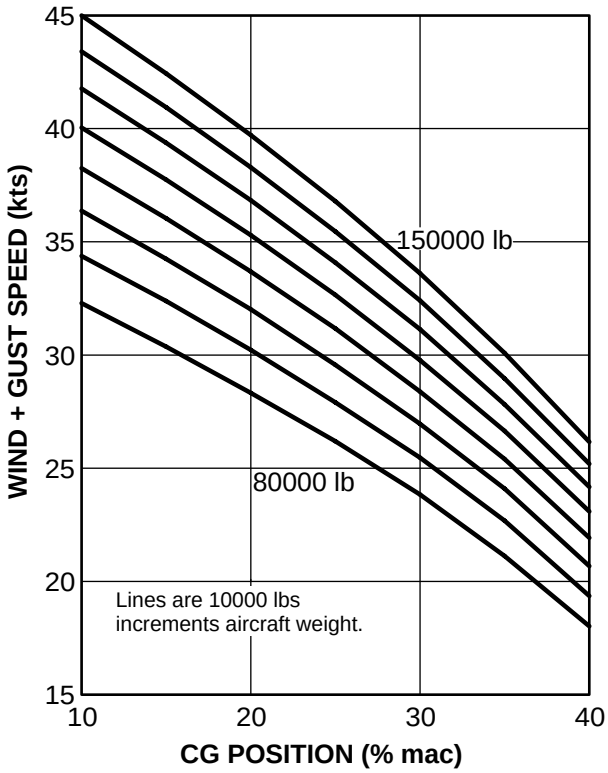

ON SNOWED SURFACE

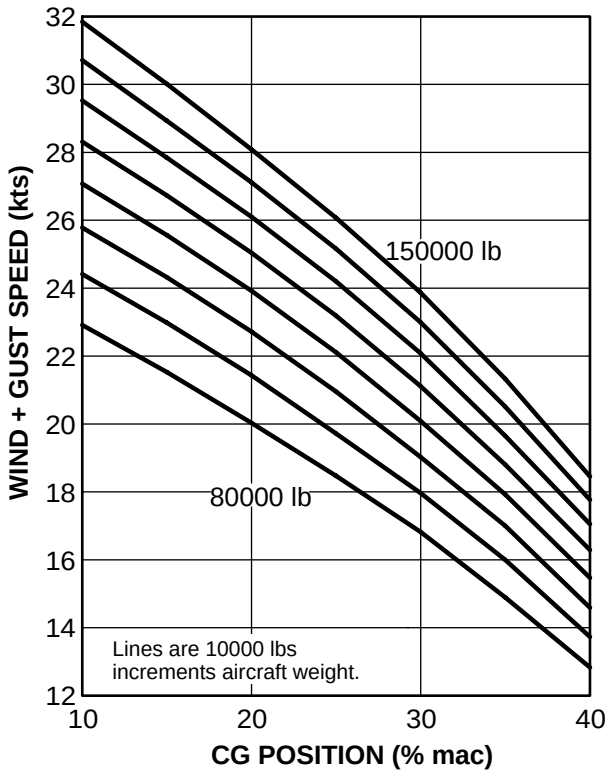

ON SANDED OR SALTED ICE

MAXIMUM WIND + GUST FOR TOWING

ICN-BD500-A-J091100-C-3AB48-48151-A-001-01

Figure 1 Towing safety precautions - General maintenance safety procedure - (Sheet 2 of 2)

Requirements after job completion

Required conditions

Table 6 Required conditions

Action/Condition	Data Module/Technical publication
Remove all tools, equipment, and unwanted materials from the work area.	

Debogging - General

Applicability: 50001-54999, 55001-59999

Table of contents

Page

Debogging - General..... 1
References..... 1
Description..... 1
1 Introduction..... 1
2 Debogging..... 1

List of tables

Page

1 References..... 1

References

Table 1 References

Data Module/Technical Publication	Title
BD500-A-J07-20-00-00AAA-177A-A	Stabilizing the aircraft - Stabilizing
BD500-A-J07-50-00-00AAA-811A-A	Prepare a roadway - Preparation for vehicle transportation
BD500-A-J08-40-00-00AAA-050A-A	Managing aircraft weight - Diagram and lists
BD500-A-J32-00-00-01AAA-913G-A	Landing gear safety precautions - General maintenance safety procedure
BD500-A-J32-11-05-01AAA-066A-A	Locking pin, landing gears - Support equipment and tools data
BD500-A-J32-41-01-01AAA-310D-A	Main wheel and tire assembly - General visual inspection

Description

1 Introduction

Debogging is required when an aircraft has not landed on a hard surface. An aircraft can get bogged down in sand, mud, or snow and has not sustained significant damage. The removal of an aircraft from this condition is referred to as debogging. The aircraft will be unable to move under its own power or through normal towing procedures using a standard tow bar and tractor; however, it can be moved on its own landing gear. Every debogging incident is different with many varying conditions and circumstances.

2 Debogging

General considerations involved in the initial debogging process are as follows:

1 Confirm the weight and center of gravity location Refer to BD500-A-J08-40-00-00AAA-050A-A.

2 Confirm the aircraft is in a stable condition. Refer to BD500-A-J07-20-00-00AAA-177A-A.

3 Install landing gear down-lock pins. Refer to BD500-A-J32-11-05-01AAA-066A-A.

4 Carry out a thorough inspection of the landing gear to ensure its serviceability and ability to support the weight of the aircraft. Refer to BD500-A-J32-41-01-01AAA-310D-A.

5 Ensure the wheels are chocked. Refer to BD500-A-J32-00-00-01AAA-913G-A.

6 If one landing gear is bogged down more than another, fuel can be moved from the low wing to reduce the weight on that gear.

7 Reduce the aircraft weight as much as possible. Refer to BD500-A-J08-40-00-00AAA-050A-A.

8 Confirm the soil stability and prepare a roadway if required. Refer to BD500-A-J07-50-00-00AAA-811A-A.

9 Excavate as much material as possible from around any bogged down landing gear.

Towing from the main gear - Debogging

Applicability: 50001-54999, 55001-59999

Table of contents

Page

Towing from the main gear - Debogging..... 1
References..... 1
Common information..... 1
Preliminary requirements..... 2
Procedure..... 3
Requirements after job completion..... 8

List of tables

Page

1 References..... 1
2 Required conditions..... 2
3 Support equipment..... 2
4 Consumables, materials, and expendables..... 3
5 Spares..... 3
6 Required conditions..... 8

List of figures

Page

1 Towing from the main gear..... 6

References

Table 1 References

Data Module/Technical Publication	Title
BD500-A-J07-40-00-00AAA-028A-A	Site survey - General
BD500-A-J07-40-00-01AAA-028A-A	Weight and center of gravity management - General
BD500-A-J07-40-00-02AAA-028A-A	Leveling and lifting - General
BD500-A-J07-40-00-04AAA-028A-A	General and quick reference checklist for aircraft recovery - General
BD500-A-J09-11-00-01AAA-913G-A	Towing safety precautions - General maintenance safety procedure
BD500-A-J09-13-00-00AAA-028A-A	Debogging - General
BD500-A-J12-10-32-02AAA-214A-A	Main Landing Gear (MLG) tire - Fill with nitrogen
BD500-A-J71-11-00-00AAA-740A-A	Fan cowl system - Close after access procedure

Common information

This data module gives the procedure to tow the aircraft from the Main Landing Gear (MLG).

Preliminary requirements

Production maintenance data

Zones	731	Main landing gear, left side
	741	Main landing gear, right side

Required conditions

Table 2 Required conditions

Action/Condition	Data Module/Technical publication
Make sure that the aircraft is officially released by the investigative authorities for the recovery operations.	
Obey the general health and safety precautions.	BD500-A-J07-40-00-00AAA-028A-A
Make sure that general quick reference list is referred.	BD500-A-J07-40-00-04AAA-028A-A
Make sure that the aircraft weight reduced to as much as possible.	BD500-A-J07-40-00-01AAA-028A-A
Obey the aircraft levelling and lifting procedure.	BD500-A-J07-40-00-02AAA-028A-A
Obey the towing safety precautions.	BD500-A-J09-11-00-01AAA-913G-A

Support equipment

Table 3 Support equipment

Name	Identification/Reference	Quantity	Remark
Wheel chocks	99-9028-6000	3	
Charging and gauging kit	STD-0303	1	

Consumables, materials, and expendables

Table 4 Consumables, materials, and expendables

Name	Identification/Reference	Quantity	Remark
None			

Spares

Table 5 Spares

Name	Identification/Reference	Quantity	Remark
None			

Safety conditions

None

Procedure

WARNING

Make sure that the lock pins are installed in the nose and main landing gear. The nose and main landing gear can accidentally retract and cause injury to persons and/or damage to equipment.

CAUTION

If the aircraft has a damaged landing gear, you must repair or replace the landing gear before you tow or winch the aircraft. If you do not obey this precaution, injuries to persons or damage to the equipment can occur.

1 General

1.1 Select the applicable procedure to tow the aircraft from the MLG depend on the aircraft position:

- Towing the aircraft in forward direction
- Towing the aircraft in aft direction.

CAUTION

During towing operation, aircraft brakes or park brake must not be used to stop the aircraft unless there is an emergency. Aircraft braking can result in damage to the Nose Landing Gear (NLG) aircraft structure.

2 Tow the aircraft as follows:

Refer to Fig. 1 .

2.1 Examine the aircraft for debogging and select the applicable procedure to tow the aircraft, for forward or aft direction. Refer to BD500-A-J09-13-00-00AAA-028A-A.

Note

The tow vehicle must be parked near to the runway.

2.2 Make sure that all the safety devices are installed on the landing gears.

2.3 Make sure that the engine cowl is closed. Refer to BD500-A-J71-11-00-00AAA-740A-A.

2.4 Set the ground tow control lever to the towing position.

2.5 Decrease the tire pressures to give a higher surface area to tow the aircraft. Refer to BD500-A-J12-10-32-02AAA-214A-A.

2.6 Put the slings in its position on the MLG.

Note

This sling must support the minimum load of 60,000 kg.

2.7 Wind the tow strap or loops of nylon or carbon fiber around the landing gear cylinder.

2.8 Connect the tow cable to the slings.

Note

Be sure that the tow cable is correctly attached to the two slings in the two gears.

2.9 Connect the tow cables to the tow vehicle.

Note

These tow cables should be rigged so that the pulling load is equally distributed between the MLG.

2.10 The cables must be attached with the rope or the light cable approximately each five meters to prevent uncontrolled movement of the cable if it breaks.

2.11 Carefully tow the aircraft.

Note

Be careful when the aircraft moves from a soft soil to a hard soil, because it can move quickly.

2.12 Speed of the tow vehicle must be steady during the entire movement of aircraft.

2.13 Provide a communication between tow vehicle or operators.

2.14 Use load limiting or load indicating devices for MLG when aircraft is towed.

2.15 Move the aircraft in the straight line with the maximum radius possible.

2.16 On inclined surfaces a restraint vehicle can be attached in the opposite direction to the movement of the aircraft.

Note

This is to prevent rearward movement of the aircraft and to prevent the accident.

2.17 Put the wheel chocks (59603, Pt. No. 99-9028-6000) in its position in front and behind the wheels after the recovery operation.

2.18 After towing the aircraft remove the slings, tow cable, tow straps and the tow lever safety pins from the MLG.

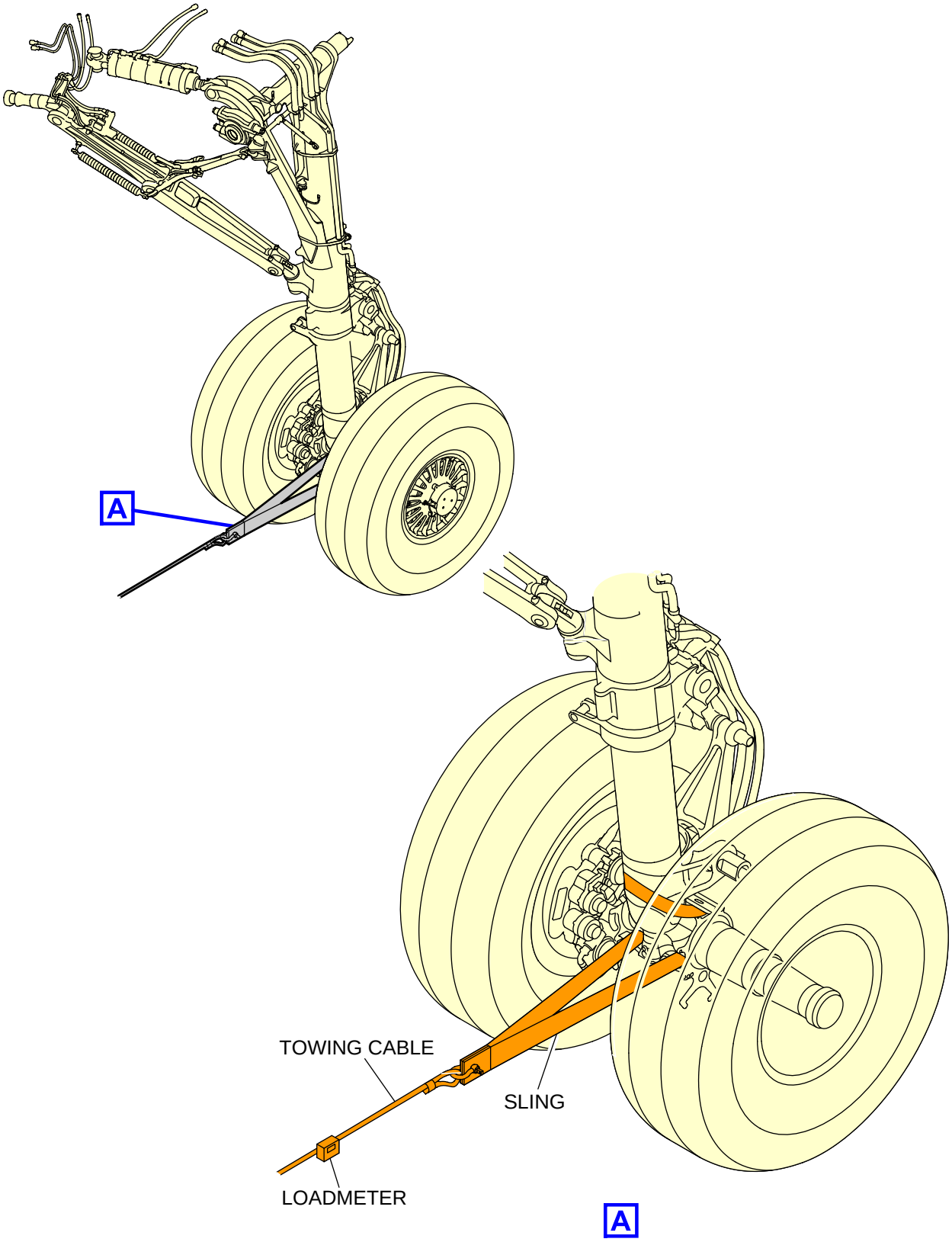

ICN-BD500-A-J091300-C-3AB48-43611-A-001-01

Figure 1 Towing from the main gear - (Sheet 1 of 2)

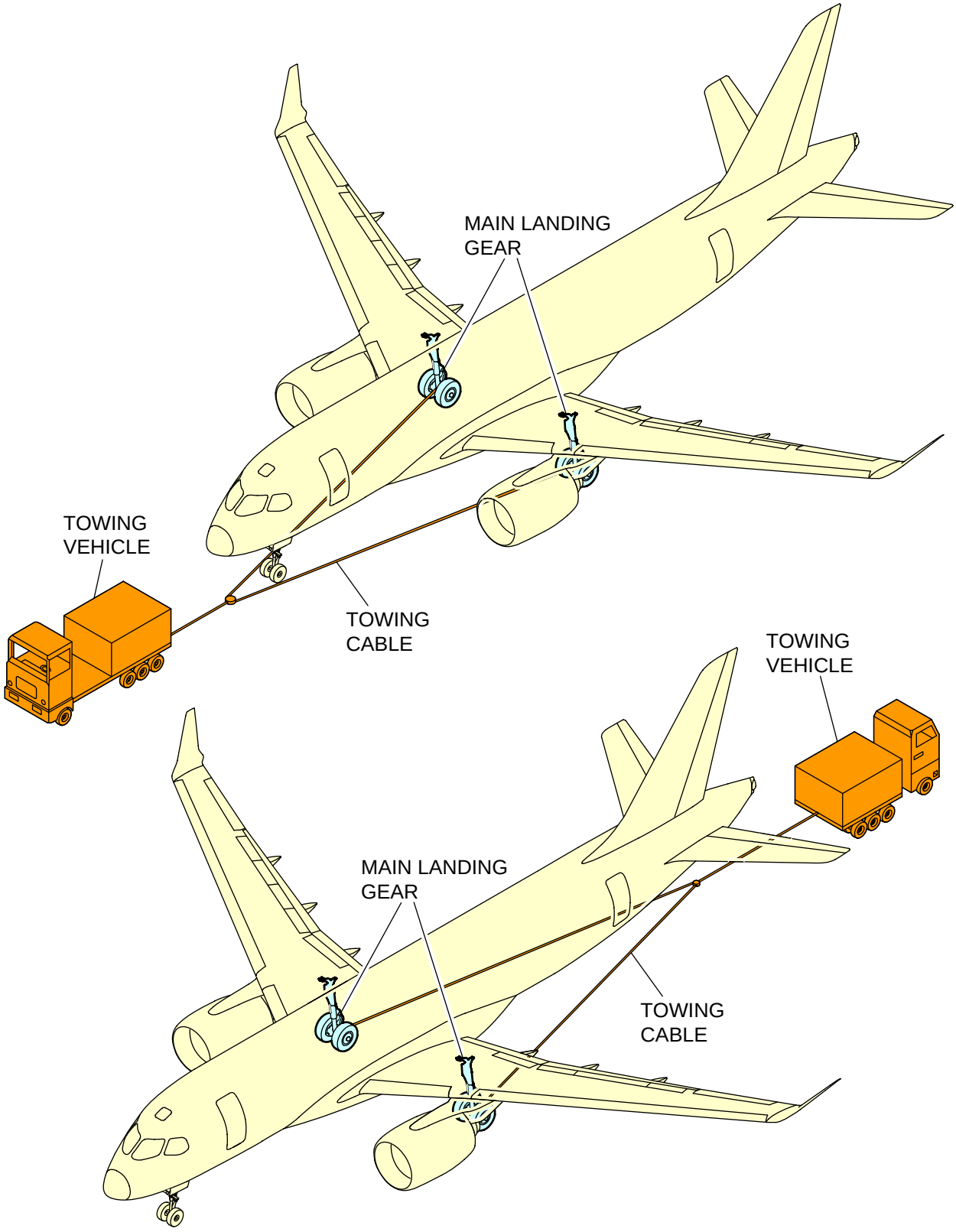

ICN-BD500-A-J091300-C-3AB48-43612-A-001-01

Figure 1 Towing from the main gear - (Sheet 2 of 2)

Requirements after job completion

Required conditions

Table 6 Required conditions

Action/Condition	Data Module/Technical publication
None	

Moving damaged aircraft on trailers - Handling

Applicability: 50001-54999, 55001-59999

Table of contents

Page

Moving damaged aircraft on trailers - Handling..... 1
References..... 1
Common information..... 1
Preliminary requirements..... 2
Procedure..... 3
Requirements after job completion..... 7

List of tables

Page

1 References..... 1
2 Required conditions..... 2
3 Support equipment..... 2
4 Consumables, materials, and expendables..... 2
5 Spares..... 2
6 Required conditions..... 7

List of figures

Page

1 Moving the aircraft with trailers..... 5

References

Table 1 References

Data Module/Technical Publication	Title
BD500-A-J07-40-00-00AAA-028A-A	Site survey - General
BD500-A-J07-40-00-01AAA-028A-A	Weight and center of gravity management - General
BD500-A-J07-40-00-02AAA-028A-A	Leveling and lifting - General
BD500-A-J07-40-00-04AAA-028A-A	General and quick reference checklist for aircraft recovery - General
BD500-A-J07-12-00-00AAA-062A-A	Use of pneumatic lifting bags - Standard support equipment and tools

Common information

This data module gives the procedure to move the damaged aircraft on trailers.

Preliminary requirements

Required conditions

Table 2 Required conditions

Action/Condition	Data Module/Technical publication
Make sure that the aircraft is officially released by the investigative authorities for the recovery operations.	
Obey the general health and safety precautions.	BD500-A-J07-40-00-00AAA-028A-A
Make sure that general quick reference list is referred.	BD500-A-J07-40-00-04AAA-028A-A
Make sure that the aircraft weight reduced to as much as possible.	BD500-A-J07-40-00-01AAA-028A-A
Obey the aircraft levelling and lifting procedure.	BD500-A-J07-40-00-02AAA-028A-A

Support equipment

Table 3 Support equipment

Name	Identification/Reference	Quantity	Remark
None			

Consumables, materials, and expendables

Table 4 Consumables, materials, and expendables

Name	Identification/Reference	Quantity	Remark
None			

Spares

Table 5 Spares

Name	Identification/Reference	Quantity	Remark
None			

Safety conditions

None

Procedure

1 Move the damaged aircraft on trailers as follows:
Refer to Fig. 1 .

CAUTION

Secondary damage can occur when you use trailers to support and move the aircraft.

1.1 Use of trailers is the only method when the landing gears are not serviceable or landing gears are missing.

WARNING

Safety devices, warning signs, and placards must be in position before you start a procedure. Movement of flight control components can cause injury to persons and/or damage to equipment.

1.2 Make sure that the trailer structure can support the weight of the aircraft.

1.3 Make sure that the soil stability is sufficient to support the weight of the aircraft and the weight trailers.

CAUTION

Make sure that the loads on the airframe are less than the allowable loads when you use supports. The supports apply loads that do not occur in normal operation.

1.4 There are bearing areas and loads permitted to those areas on the aircraft.
Refer to BD500-A-J07-12-00-00AAA-062A-A.

CAUTION

Do not apply loads to the engine nacelle structure because secondary damage will occur.

1.5 Do not apply load in the following cases:

- If the structural damage appears in the bearing area
- If the load bearing capacity of the structure is less than the permitted value of that area.

1.6 When only Nose Landing Gear (NLG) is missing or not serviceable, support the forward fuselage with flat bed trailer.

Note

Flatbed trailers have turntable which gives the turning effect for both towing vehicle and the trailer.

1.6.1 If a turntable is used, it must be sufficient to support the weight of the aircraft.

1.7 If one or more landing gears are missing, use multiple recovery trailers to support the aircraft based on the requirements.

Note

If the aircraft weight is more, multi-wheel trailers are recommended which are self-propelled and fully steerable.

1.8 Install the supports between the aircraft structures and the trailer to prevent the secondary damage.

1.8.1 The supports can be made from timber or plywood and must be covered with padded material.

Note

Padding will helps to spread the loads on the surface and to avoid point loads.

Padding will give the friction between aircraft surface and supports.

1.8.2 Put the padding to follow the contour of the aircraft surface.

Note

Some aircraft recovery trailers have hydraulically controlled supports which conform to the fuselage and wing contours.

1.8.3 The padding material can be foam, rubber, tires, sand bags, mattresses, or pneumatic bags.

1.8.4 Use the filler foam to fill gaps after padding to make a correct contour.

1.8.5 Make sure that the installed supports and padding remain stable when you move the aircraft.

1.8.6 Tie down the aircraft structure to the trailer to prevent relative movement between the aircraft and the trailer.

1.9 Keep the minimum pull speed to move the aircraft and maximum turn radius during turn.

1.10 Support must be given to the trailer driver during the recovery process.

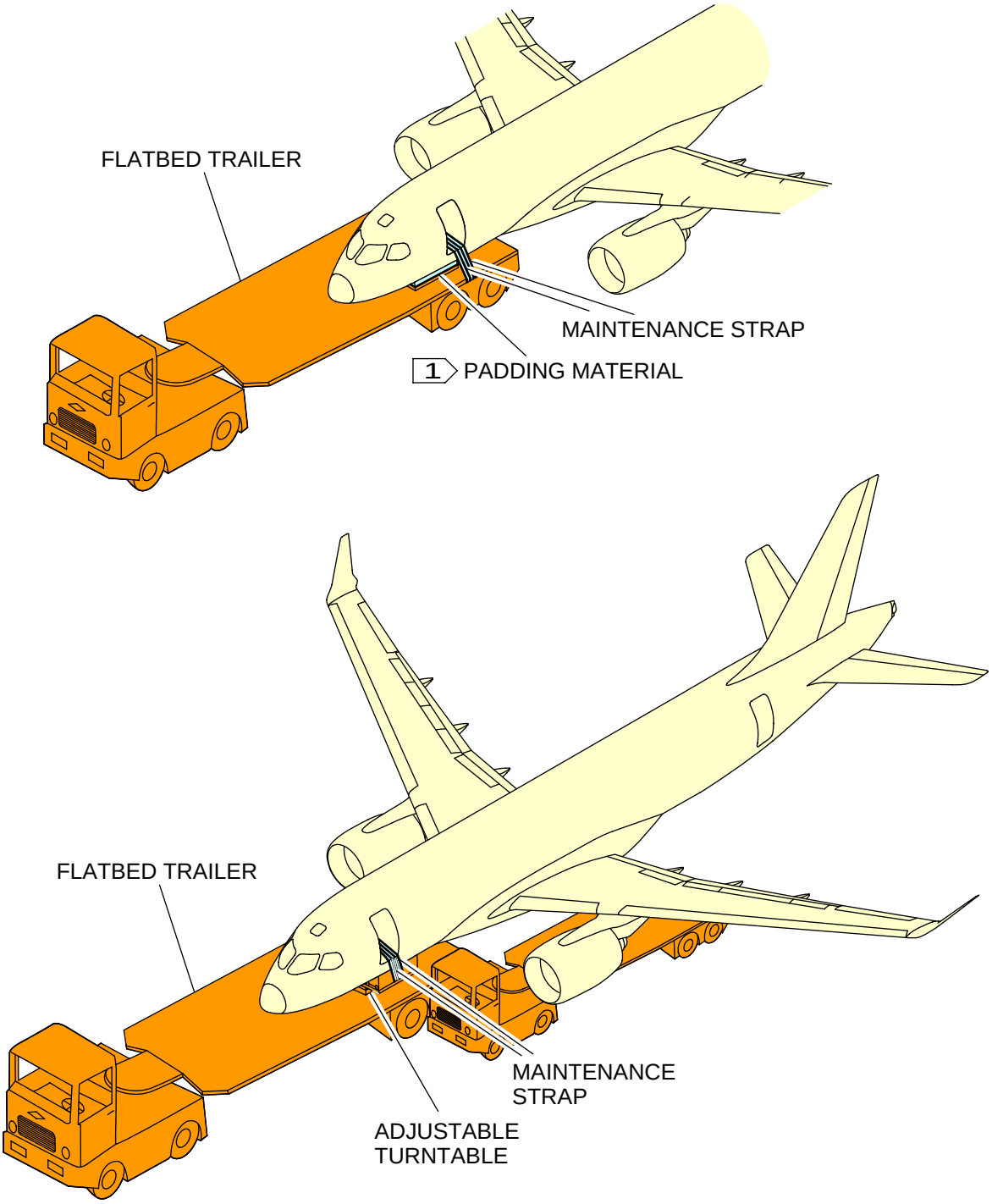

NOTE

1 Padding materials are plywood, automated lifting bags, foam, etc.

ICN-BD500-A-J092001-C-3AB48-44192-A-001-01

Figure 1 Moving the aircraft with trailers - (Sheet 1 of 2)

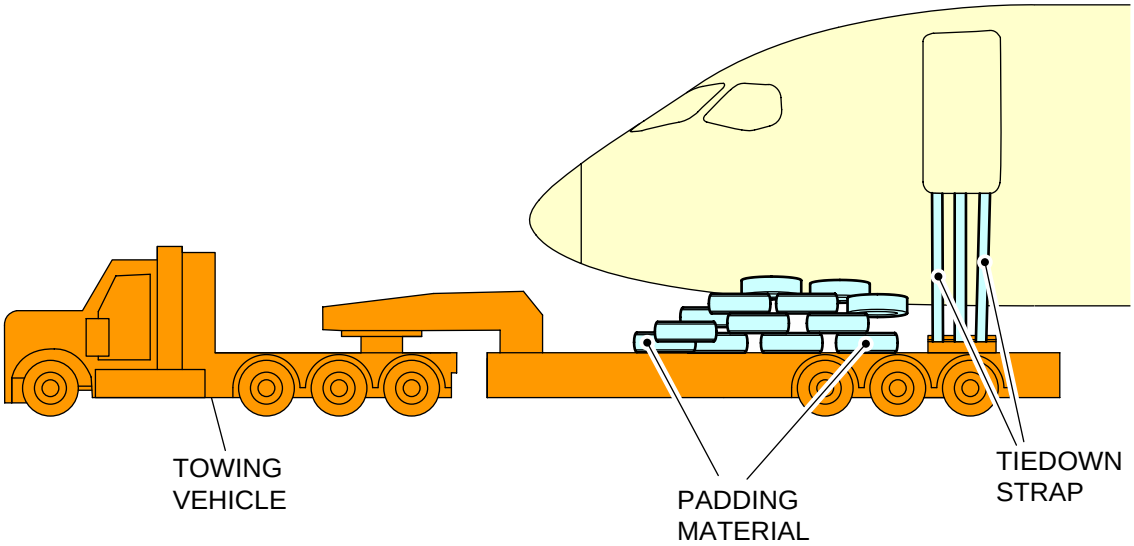

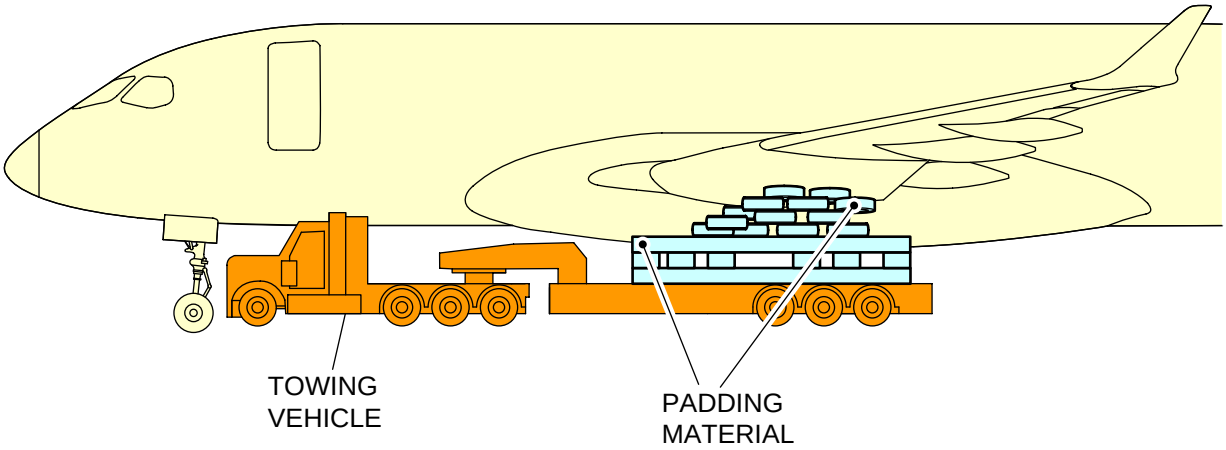

ENGINE NOT SHOWN FOR CLARITY

ICN-BD500-A-J092001-C-3AB48-44193-A-001-01

Figure 1 Moving the aircraft with trailers - (Sheet 2 of 2)

Requirements after job completion

Required conditions

Table 6 Required conditions

Action/Condition	Data Module/Technical publication
None	

Intentionally left blank

Moving damaged aircraft with cranes - Handling

Applicability: 50001-54999, 55001-59999

Table of contents

Page

Moving damaged aircraft with cranes - Handling..... 1
References..... 1
Common information..... 1
Preliminary requirements..... 1
Procedure..... 3
Requirements after job completion..... 4

List of tables

Page

1 References..... 1
2 Required conditions..... 1
3 Support equipment..... 2
4 Consumables, materials, and expendables..... 2
5 Spares..... 2
6 Required conditions..... 4

References

Table 1 References

Data Module/Technical Publication	Title
BD500-A-J07-30-00-00AAA-062A-A	Use of cranes - Standard support equipment and tools
BD500-A-J07-40-00-02AAA-028A-A	Leveling and lifting - General
BD500-A-J07-50-00-00AAA-811A-A	Prepare a roadway - Preparation for vehicle transportation

Common information

This data module gives the procedure to move the damaged aircraft with cranes.

Preliminary requirements

Required conditions

Table 2 Required conditions

Action/Condition	Data Module/Technical publication
Make sure that the aircraft is officially released by the investigative authorities for the recovery operations.	

Action/Condition	Data Module/Technical publication
Make sure that the wind speed is not more than the maximum permitted speed.	
Make sure that the aircraft weight is reduced as much as possible.	
Obey the aircraft lifting and leveling procedure.	BD500-A-J07-40-00-02AAA-028A-A
Make sure that the roadway is prepared accordingly.	BD500-A-J07-50-00-00AAA-811A-A

Support equipment

Table 3 Support equipment

Name	Identification/Reference	Quantity	Remark
None			

Consumables, materials, and expendables

Table 4 Consumables, materials, and expendables

Name	Identification/Reference	Quantity	Remark
None			

Spares

Table 5 Spares

Name	Identification/Reference	Quantity	Remark
None			

Safety conditions

None

Procedure

WARNING

Safety devices, warning signs, and placards must be in position before you start a procedure. Movement of flight control components can cause injury to persons and/or damage to equipment.

CAUTIONS

- **Make sure that the crane you use can lift the estimated load plus the weight of the lifting equipment before you start to lift the aircraft.**
- **Make sure that the loads on the airframe are less than the allowable loads when you use supports. The supports apply loads that do not occur in normal operation.**

1 Move the damaged aircraft with cranes as follows:

Note

Moving the aircraft with the cranes is the last method to use when all other methods are not appropriate.

The required number of cranes is calculated on the basis of weight and center of gravity calculations or contact the aerodrome operator or aircraft operator.

1.1 The cranes must be positioned sufficiently near to the aircraft and the lifting points.

1.2 Install the straps or slings to the aircraft with cranes. Refer to BD500-A-J07-30-00-00AAA-062A-A.

1.3 Use load measuring tool to monitor and record the loads on the slings when aircraft is moved.

1.4 Provide the adequate support to the wings and fuselage of the aircraft to prevent secondary damage.

1.5 Carefully move the cranes at same time.

1.6 Speed of the cranes must be steady during the entire movement of aircraft.

1.7 Provide the communication between crane drivers or operators.

Requirements after job completion

Required conditions

Table 6 Required conditions

Action/Condition	Data Module/Technical publication
None	

A220

Moving aircraft with specialized recovery transport vehicles - Handling

Applicability: 50001-54999, 55001-59999

Table of contents

Page

Moving aircraft with specialized recovery transport vehicles - Handling..... 1
References..... 1
Common information..... 1
Preliminary requirements..... 2
Procedure..... 3
Requirements after job completion..... 12

List of tables

Page

1 References..... 1
2 Required conditions..... 2
3 Support equipment..... 2
4 Consumables, materials, and expendables..... 2
5 Spares..... 3
6 Required conditions..... 12

List of figures

Page

1 Moving aircraft with specialized recovery transport vehicles..... 6
2 Moving aircraft with specialized recovery transport vehicles..... 11

References

Table 1 References

Data Module/Technical Publication	Title
BD500-A-J07-12-00-00AAA-062A-A	Use of pneumatic lifting bags - Standard support equipment and tools
BD500-A-J07-40-00-00AAA-012A-A	Health and safety issues - General warnings and cautions and related safety data
BD500-A-J07-40-00-01AAA-028A-A	Weight and center of gravity management - General
BD500-A-J07-40-00-02AAA-028A-A	Leveling and lifting - General
BD500-A-J07-40-00-04AAA-028A-A	General and quick reference checklist for aircraft recovery - General

Common information

This data module gives the procedure to move the damaged aircraft with specialized recovery transport vehicles.

Preliminary requirements

Required conditions

Table 2 Required conditions

Action/Condition	Data Module/Technical publication
Make sure that the aircraft is officially released by the investigative authorities for the recovery operations.	
Obey the general health and safety precautions.	BD500-A-J07-40-00-00AAA-012A-A
Make sure that the general and quick reference checklist for aircraft recovery is referred.	BD500-A-J07-40-00-04AAA-028A-A
Make sure that the aircraft weight reduced to as much as possible.	BD500-A-J07-40-00-01AAA-028A-A
Obey the aircraft levelling and lifting procedure.	BD500-A-J07-40-00-02AAA-028A-A

Support equipment

Table 3 Support equipment

Name	Identification/Reference	Quantity	Remark
None			

Consumables, materials, and expendables

Table 4 Consumables, materials, and expendables

Name	Identification/Reference	Quantity	Remark
None			

Spares

Table 5 Spares

Name	Identification/Reference	Quantity	Remark
None			

Safety conditions

None

Procedure

1 General

1.1 The are two types specialized recovery transport vehicles as follows:

- Specialized recovery trailers
- Sledge systems.

1.2 The specialized recovery trailers which includes following features:

- Self-propelled
- Hydraulically controlled supports which confirms the contour of the wing surface
- Multi wheel drive systems
- Multi wheel steering systems
- Can be remotely operated
- Can be linked together with beams or cables.

1.3 The sledge systems are used to support the aircraft while it is towed on the soft ground.

2 Move the damaged aircraft on special recovery transport vehicle as follows:

Refer to Fig. 1 .

WARNING

Safety devices, warning signs, and placards must be in position before you start a procedure. Movement of flight control components can cause injury to persons and/or damage to equipment.

2.1 Make sure that the soil stability is sufficient to support the weight of the aircraft and the weight trailers.

2.2 Make sure that the trailer structure can support the weight of the aircraft.

CAUTION

Make sure that the loads on the airframe are less than the allowable loads when you use supports. The supports apply loads that do not occur in normal operation.

2.3 There are bearing areas and loads permitted to those areas on the aircraft. Refer to BD500-A-J07-12-00-00AAA-062A-A.

CAUTION

Do not apply loads to the engine nacelle structure because secondary damage will occur.

2.4 Do not apply load in the following cases:

- If the structural damage appears in the bearing area
- If the load bearing capacity of the structure is less than the permitted value of that area.

2.5 When only Nose Landing Gear (NLG) is missing or not serviceable, support the forward fuselage with flat bed trailer.

Note

Flat bed trailers have turntable which gives the turning effect for both towing vehicle and the trailer.

2.5.1 If a turntable is used, it must be sufficient to support the weight of the aircraft.

2.6 If one or more Landing Gear (LDG) are missing, use multiple recovery trailers to support the aircraft based on the requirements.

Note

If the aircraft weight is more, multi-wheel trailers are recommended which are self-propelled and fully steerable.

2.7 Use hydraulically controlled trailers for the wings which gives the following benefits:

- Follows the contour of the wing
- Avoids the use of support and padding
- Prevents the secondary damage
- Can be remotely linked.

2.8 Make sure that all the trailers are connected with beam, cables, or chains.

2.9 Keep the minimum pull speed to move the aircraft and maximum turn radius during turn.

2.10 Support must be given to the trailer driver during the recovery process.

3 Move the damaged aircraft on the sledges as follows:
Refer to Fig. 2 .

Note
Follow the same procedure for any number of sledges.

3.1 Prepare the sledge assembly.

Note
Generally, the aluminum panels and wood beams are used to prepare the sledge assemblies.

3.2 install the supports (shoring) between sledge and the aircraft structure if required.

3.3 Use padding between shoring material and aircraft structure.

Note
Generally, pneumatic bags or foam are used for this purpose.

3.4 Tie the sledge assembly to the aircraft by the straps.

3.5 Connect the all sledge assemblies to towing vehicle through the cables or chains.

3.5.1 Select the towing vehicle of sufficient capacity.

3.6 Connect the heavy vehicles in opposite manner to control the pulling speed.

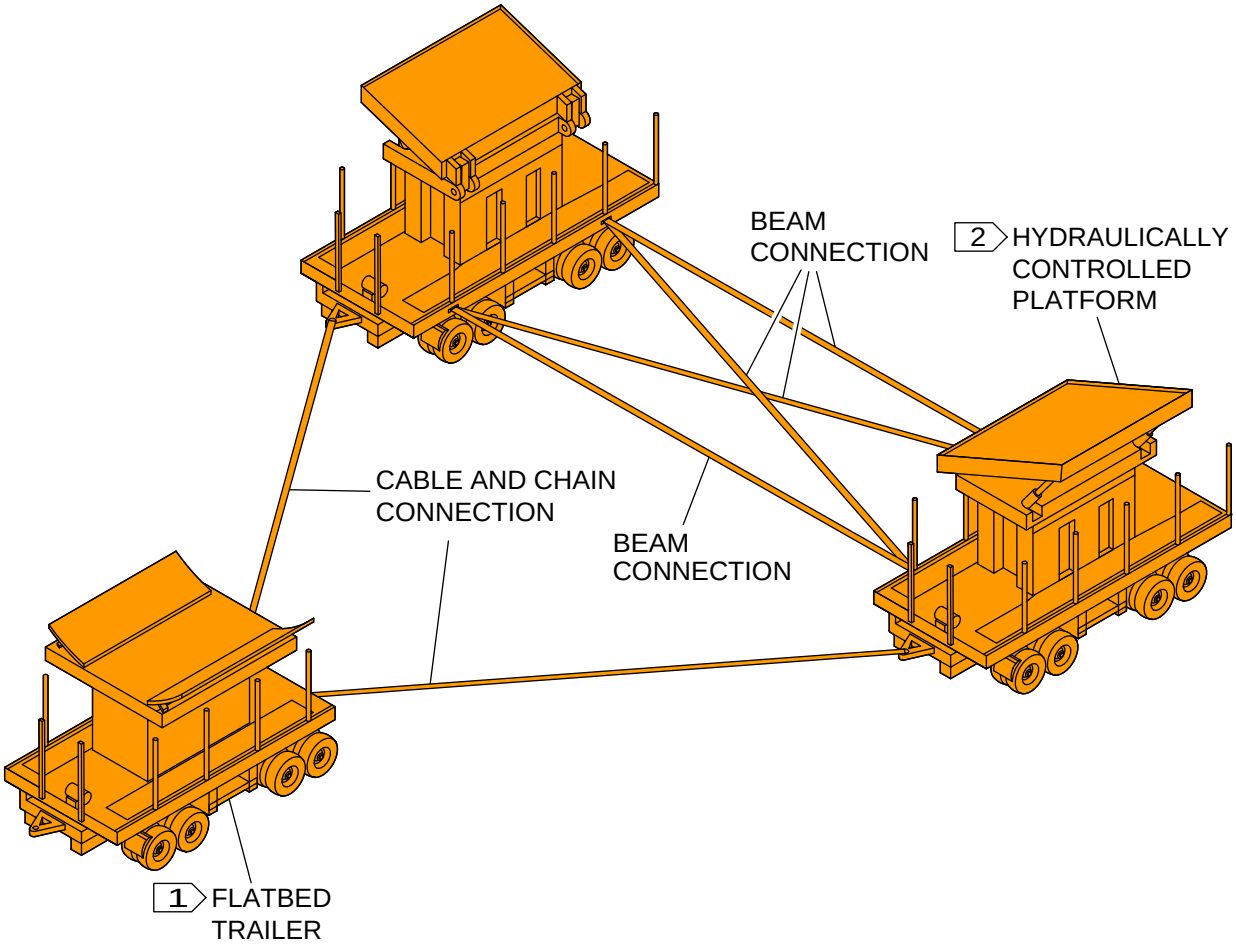

NOTES

1 Used under the nose fuselage.

2 Used under the wings.

ICN-BD500-A-J092000-C-3AB48-43004-A-001-01

Figure 1 Moving aircraft with specialized recovery transport vehicles - (Sheet 1 of 5)

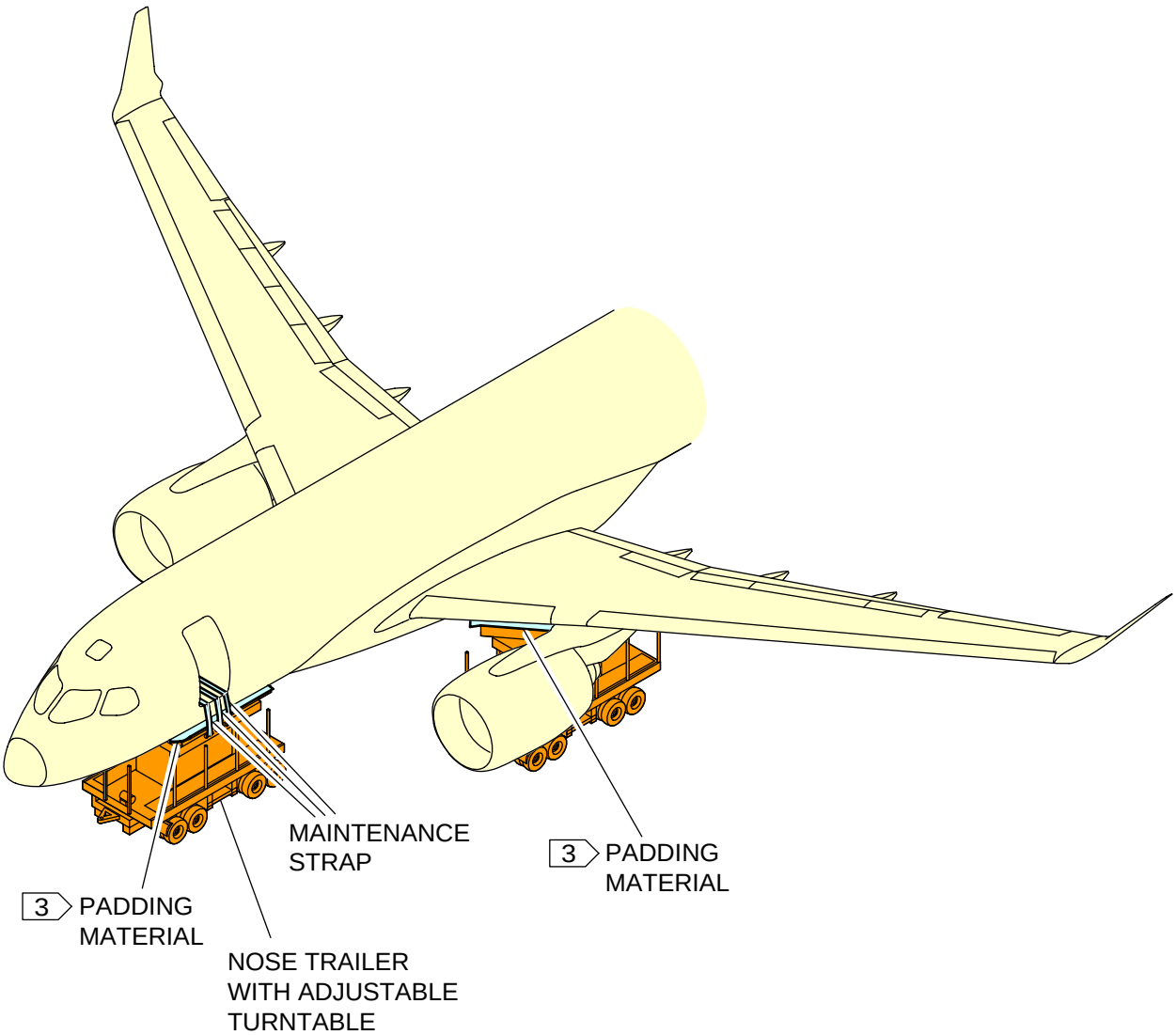

NOTE

3 Padding materials are plywood, automated lifting bags, foams, etc.

ICN-BD500-A-J092000-C-3AB48-43005-A-001-01

Figure 1 Moving aircraft with specialized recovery transport vehicles - (Sheet 2 of 5)

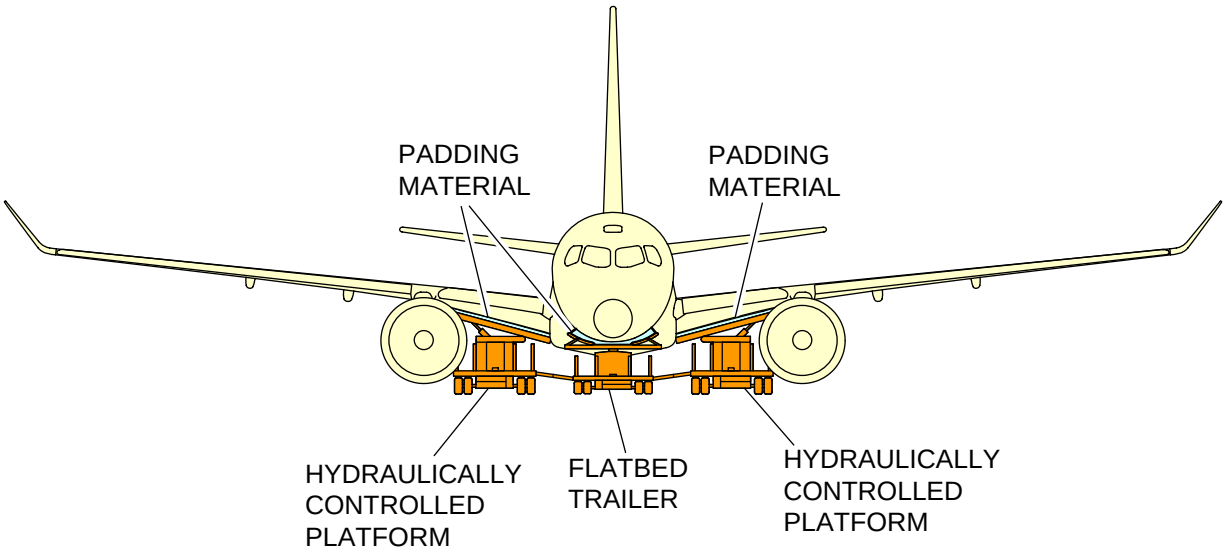

ICN-BD500-A-J092000-C-3AB48-43927-A-001-01

Figure 1 Moving aircraft with specialized recovery transport vehicles - (Sheet 3 of 5)

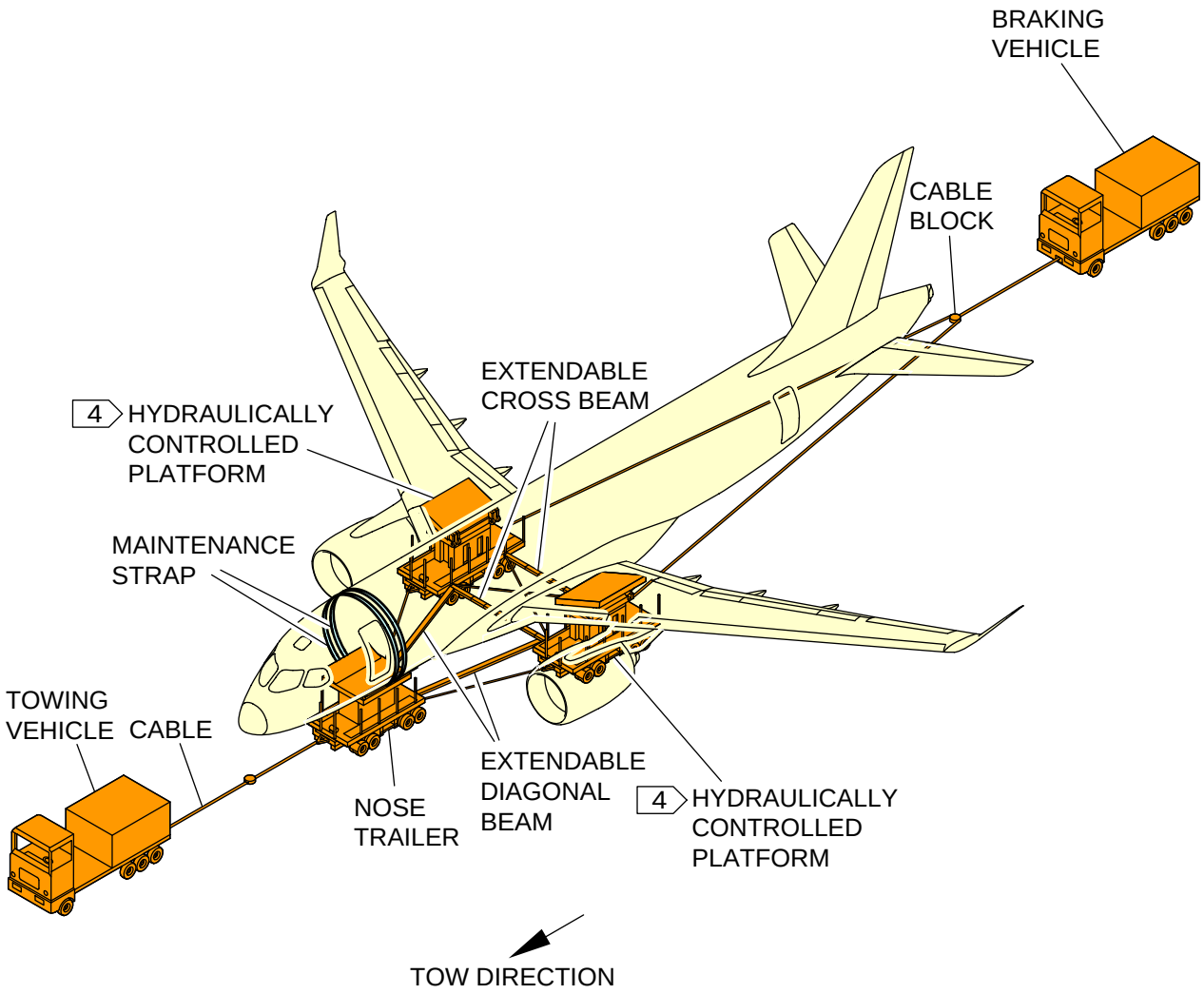

NOTE

4 Used under the wings.

ICN-BD500-A-J092000-C-3AB48-44425-A-001-01

Figure 1 Moving aircraft with specialized recovery transport vehicles - (Sheet 4 of 5)

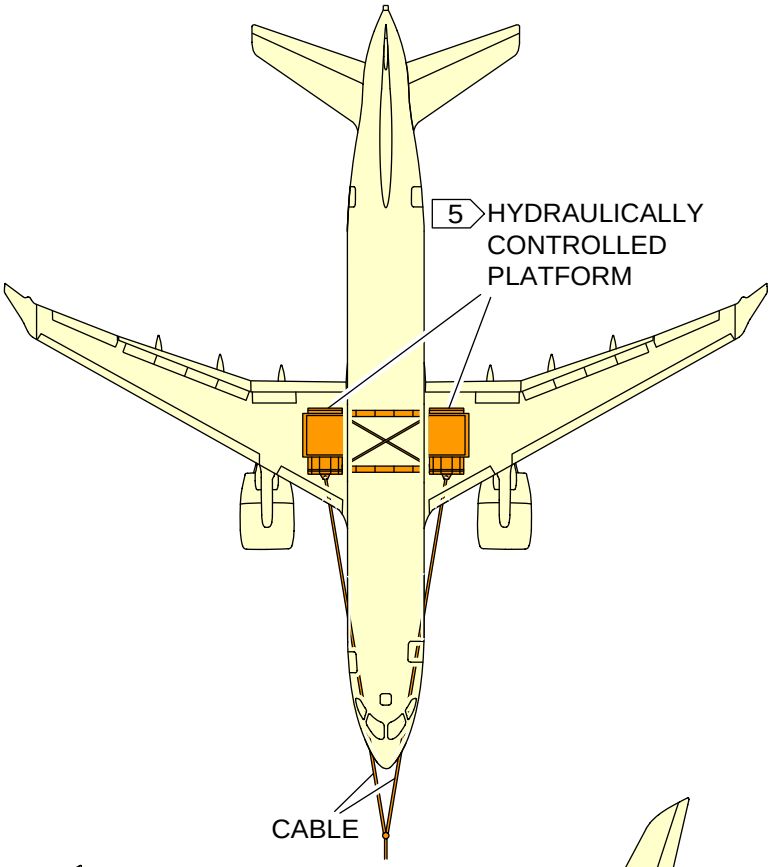

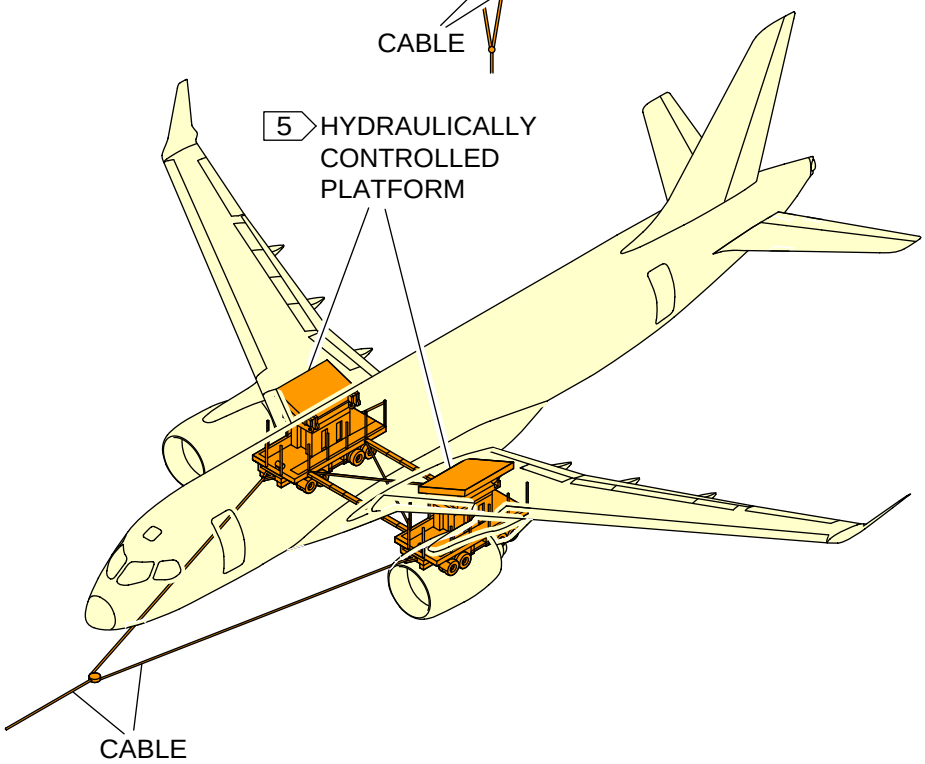

NOTE

5 Use this kind of arrangement when the two main landing gear are damaged and the nose gear is serviceable.

ICN-BD500-A-J092000-C-3AB48-44426-A-001-01

Figure 1 Moving aircraft with specialized recovery transport vehicles - (Sheet 5 of 5)

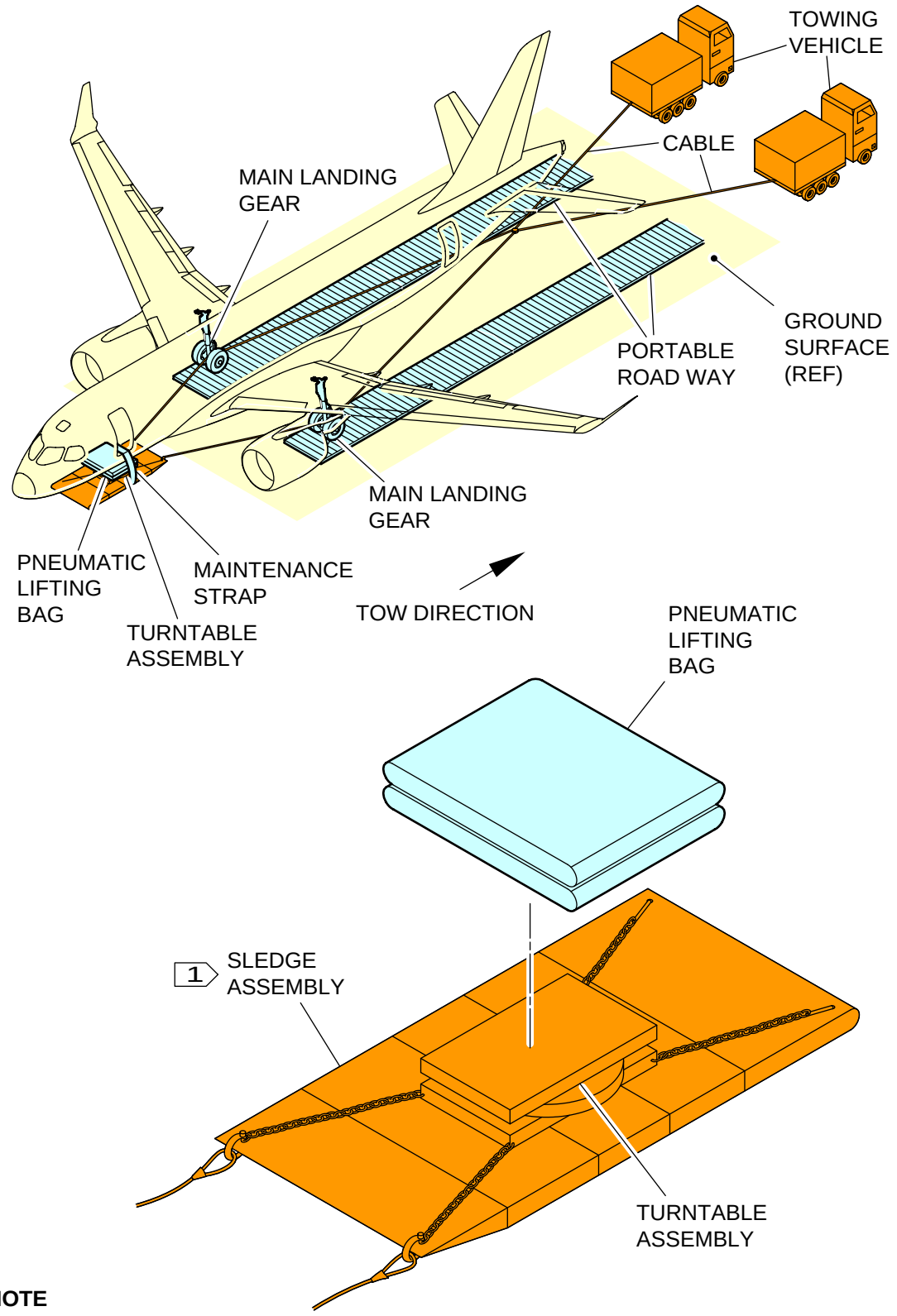

NOTE

1 The sledge assembly can be disassembled into five section or part for easly transportation.

ICN-BD500-A-J092000-C-3AB48-44427-A-001-01

Figure 2 Moving aircraft with specialized recovery transport vehicles

Requirements after job completion

Required conditions

Table 6 Required conditions

Action/Condition	Data Module/Technical publication
None	

Ground maneuvering, turning radii - Technical data

Applicability: 50001-54999, 55001-59999

Table of contents

Page

Ground maneuvering, turning radii - Technical data..... 1
References..... 1
Description..... 1
1 Introduction..... 1
2 Landing gear turning radii, including minimum turning radii..... 2

List of tables

Page

1 References..... 1
2 Turning radii for various nose wheel angles..... 2
3 Turning radii for various nose wheel angles..... 2

List of figures

Page

1 Ground maneuvering, turning radii - Technical data..... 4

References

Table 1 References

Data Module/Technical Publication	Title
None	

Description

1 Introduction

This data module contains data about the aircraft turning capability and maneuvering characteristics on the ground. The data is based on aircraft performance in good conditions of operation. Thus, the values must be considered theoretical and used only as an aid. Refer to Table 2 and Table 3 for the values to use with Fig. 1 for the turn radii with 3 degree slip angle.

2 Landing gear turning radii, including minimum turning radii

Applicability: 50001-54999

Table 2 Turning radii for various nose wheel angles

Turning angle (in degrees) with 3 degree tire slip	Turning center to aircraft center line (D)	Nose tip (R1)	Nose gear outside face (R2)	Main gear outside face (R3)	Wing tip (R4)	Empennage tip (R5)	Minimum theoretical pavement width for 180 degrees turn (Tw= R2+ R3)
17	1686.8 in. (4284.47 cm)	1807.5 in. (4591.05 cm)	1776.3 in. (4511.80 cm)	1845.6 in. (4687.82 cm)	2385.4 in. (6058.91 cm)	2046.7 in. (5198.61 cm)	3621.9 in. (9199.62 cm)
27	1012.1 in. (2570.73 cm)	1202.7 in. (3054.85 cm)	1148.4 in. (2916.93 cm)	1171.0 in. (2974.34 cm)	1715.0 in. (4356.1 cm)	1430.1 in. (3632.45 cm)	2319.4 in. (5891.27 cm)
37	684.4 in. (1738.37 cm)	943.6 in. (2396.74 cm)	869.3 in. (2208.02 cm)	843.2 in. (2141.72 cm)	1390.8 in. (3532.63 cm)	1154.2 in. (2931.66 cm)	1712.6 in. (4350.00 cm)
47	480.9 in. (1221.48 cm)	808.3 in. (2053.08 cm)	717.6 in. (1822.70 cm)	639.8 in. (1625.09 cm)	1190.6 in. (3024.12 cm)	998.9 in. (2537.20 cm)	1357.3 in. (3447.54 cm)
57	334.9 in. (850.64 cm)	730.9 in. (1856.48 cm)	627.9 in. (1594.86 cm)	493.2 in. (1252.72 cm)	1047.6 in. (2660.90 cm)	899.3 in. (2284.22 cm)	1121.1 in. (2847.59 cm)
67	218.9 in. (556.00 cm)	685.5 in. (1741.17 cm)	572.7 in. (1454.65 cm)	377.8 in. (959.61 cm)	934.7 in. (2374.13 cm)	830.1 in. (2108.45 cm)	950.4 in. (2414.01 cm)
77	119.1 in. (302.51 cm)	660.04 in. (1667.41 cm)	541.7 in. (1375.91 cm)	277.9 in. (705.86 cm)	838.2 in. (2129.02 cm)	779.4 in. (1979.67 cm)	819.6 in. (2081.78 cm)

Applicability: 55001-59999

Table 3 Turning radii for various nose wheel angles

Turning angle (in degrees) with 3 degree tire slip	Turning center to aircraft center line (D)	Nose tip (R1)	Nose gear outside face (R2)	Main gear outside face (R3)	Wing tip (R4)	Empennage tip (R5)	Minimum theoretical pavement width for 180 degrees turn (Tw= R2+ R3)
17	1961.5 in. (4982.21 cm)	2094.2 in. (5319.26 cm)	2063.6 in. (5241.54 cm)	2120.4 in. (5385.81 cm)	2659.0 in. (6753.86 cm)	2307.1 in. (5860.03 cm)	4148.0 in. (10535.92 cm)

Turning angle (in degrees) with 3 degree tire slip	Turning center to aircraft center line (D)	Nose tip (R1)	Nose gear outside face (R2)	Main gear outside face (R3)	Wing tip (R4)	Empennage tip (R5)	Minimum theoretical pavement width for 180 degrees turn (Tw= R2+ R3)
27	1177.0 in. (2989.58 cm)	1386.9 in. (3522.72 cm)	1333.4 in. (3386.83 cm)	1335.8 in. (3392.93 cm)	1878.6 in. (4771.64 cm)	1576.4 in. (4004.05 cm)	2669.2 in. (6779.76 cm)
37	795.8 in. (2021.33 cm)	1082.4 in. (2749.29 cm)	1008.9 in. (2562.60 cm)	954.7 in. (2424.93 cm)	1500.9 in. (3812.28 cm)	1245.2 in. (3162.80 cm)	1963.6 in. (4987.54 cm)
47	559.2 in. (1420.36 cm)	922.5 in. (2343.15 cm)	832.4 in. (2114.29 cm)	718.1 in. (1823.97 cm)	1267.5 in. (3219.45 cm)	1056.8 in. (2684.27 cm)	1550.5 in. (3938.27 cm)
57	389.4 in. (989.07 cm)	830.6 in. (2109.72 cm)	727.5 in. (1847.85 cm)	548.3 in. (1392.68 cm)	1100.9 in. (2796.28 cm)	935.1 in. (2375.15 cm)	1275.8 in. (3240.53 cm)
67	254.6 in. (646.68 cm)	776.5 in. (1971.04 cm)	663.9 in. (1686.30 cm)	413.4 in. (1050.03 cm)	969.4 in. (2462.27 cm)	850.3 in. (2159.76 cm)	1077.4 in. (2736.59 cm)
77	138.5 in. (351.79 cm)	746.6 in. (1896.36 cm)	627.9 in. (1594.86 cm)	297.3 in. (755.14 cm)	856.9 in. (2176.52 cm)	788.5 in. (2002.79 cm)	925.2 in. (2350.00 cm)

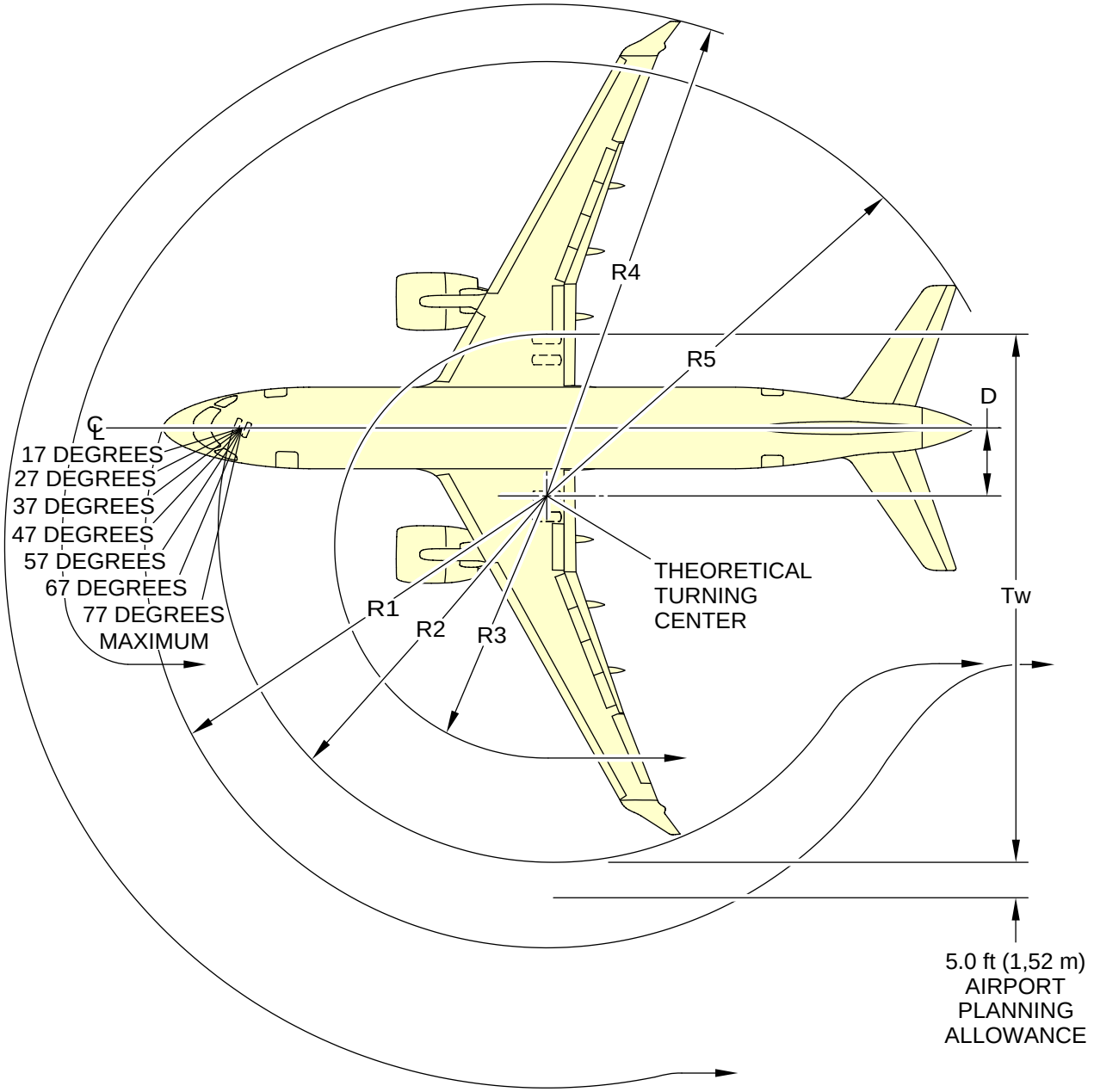

ICN-BD500-A-J092001-C-3AB48-45815-A-001-01

Figure 1 Ground maneuvering, turning radii - Technical data

Reference data for aircraft recovery

Applicable to: All

Intentionally left blank

Conversion tables - General

Applicability: 50001-54999, 55001-59999

Table of contents

Page

Conversion tables - General..... 1
References..... 1
Description..... 1
1 Unit of measure conversions..... 1

List of tables

Page

1 References..... 1
2 Conversion table (Metric to imperial)..... 1
3 Conversion table (Imperial to metric)..... 2

References

Table 1 References

Data Module/Technical Publication	Title
None	

Description

1 Unit of measure conversions

Metric and imperial are the two standards used in the Aircraft Recovery Publication (ARP) for different types of unit of measurement.

For the conversion factors from metric to imperial, refer to Table 2 .

Table 2 Conversion table (Metric to imperial)

Type of measurement	From metric	To imperial
Length	1 millimeter (mm)	0.0394 inch (in.)
	1 centimeter (cm)	0.3937 inch (in.)
	1 meter (m)	3.2808 feet (ft)
Area	1 square centimeter (cm^2)	0.1550 square inch (in^2)
	1 square meter (m^2)	10.7639 square feet (ft^2)
Volume	1 cubic meter (m^3)	61023.74 cubic inch (in^3)
	1 cubic meter (m^3)	35.31467 cubic feet (ft^3)
Weight	1 gram (g)	0.0353 ounce (oz)

Type of measurement	From metric	To imperial
	1 kilogram (kg)	2.2046 pound (lb)
Force	1 newton (N)	0.2248 pound-force (lbf)
Torque	1 newton meter (Nm)	8.8508 pound-force inch (lbf·in)
	1 newton meter (Nm)	0.7376 pound-force feet (lbf·ft)
	1 kilogram meter (kgm)	86.8056 pound-force inch (lbf·in)
Pressure	1 pascal (Pa)	0.000145 pound per square inch (lb/in²)
	1 kilopascal (kPa)	0.1450 pound per square inch (psi)
Flow rate	1 kilogram per minute (kg/min)	2.2046 pound per minute (lb/min)
	1 liter per minute (L/min)	0.2642 U.S. gallon per minute (U.S. gal/min)
Capacity	1 liter (L)	0.2642 U.S. gallon (U.S. gal)
Temperature	1 degree Celsius (°C)	9/5 (°C) + 32 = degree Fahrenheit (°F)

For the conversion factors from imperial to metric, refer to Table 3 .

Table 3 Conversion table (Imperial to metric)

Type of measurement	From imperial	To metric
Length	1 inch (in.)	25.4 millimeter (mm)
	1 inch (in.)	2.54 centimeter (cm)
	1 feet (ft)	0.3048 meter (m)
Area	1 square inch (in²)	6.4516 square centimeter (cm²)
	1 square feet (ft²)	0.0929 square meter (m²)
Volume	1 cubic inch (in³)	0.000016 cubic meter (m³)
	1 cubic feet (ft³)	0.028317 cubic meter (m³)
Weight	1 ounce (oz)	28.3495 gram (g)
	1 pound (lb)	0.4536 kilogram (kg)
Force	1 pound-force (lbf)	4.4482 newton (N)
Torque	1 pound-force inch (lbf·in)	0.1130 newton meter (Nm)
	1 pound-force inch (lbf·in)	0.01152 kilogram meter (kgm)
	1 pound-force feet (lbf·ft)	1.3558 newton meter (Nm)

Type of measurement	From imperial	To metric
Pressure	1 pound per square inch (psi)	6.8948 kilopascal (kPa)
	1 inch of mercury (inHg)	3.3864 kilopascal (kPa)
Flow rate	1 pound per minute (lb/min)	0.4536 kilogram per minute (kg/min)
	1 U.S. gallon per minute (U.S. gal/min)	3.7853 liter per minute (L/min)
Capacity	1 fluid ounce (fl oz)	29.574 milliliter (mL)
	1 U.S. gallon (U.S. gal)	3.7854 liter (L)
Temperature	1 degree Fahrenheit (°F)	5/9 (°F - 32) = degree Celsius (°C)

Intentionally left blank

Aircraft dimensions A220-100 - Technical data

Applicability: 50001-54999

Table of contents

Page

Aircraft dimensions A220-100 - Technical data..... 1
References..... 1
Description..... 1
1 General..... 1
2 Aircraft dimensions..... 1
3 Doors dimensions..... 5
4 Aircraft areas..... 7

List of tables

Page

1 References..... 1
2 General aircraft dimensions..... 1
3 Cabin doors dimensions..... 5
4 General aircraft areas..... 7

List of figures

Page

1 General aircraft dimensions..... 3
2 General aircraft dimensions..... 4
3 Aircraft doors dimensions..... 6
4 Scaled drawing (A220-100)..... 8

References

Table 1 References

Data Module/Technical Publication	Title
None	

Description

1 General

- This section contains general data about the aircraft dimensions, areas and clearances.

2 Aircraft dimensions

- Refer to Table 2 , Fig. 1 and Fig. 2 for aircraft dimensions.

Table 2 General aircraft dimensions

Description	Dimension (ft)	Dimension (m)
A	114 ft 9 in	34.9

Description	Dimension (ft)	Dimension (m)
B	12 ft 2.5 in	3.7
C	38 ft 8 in	11.8
D	40 ft 3 in	12.3
E	115 ft 1 in	35.1
F	72 ft 9 in	22.2
G	64 ft 5 in	19.6
H	111 ft 9 in	34.1
J	58 ft 3 in	17.8
K	32 ft 11 in	10.0
L	7 ft 4 in	2.2
M	35 ft 9 in	10.9
N	11 ft 6 in	3.5
P	21 ft 11 in	6.7
Q	8 ft .05 in	2.4
R	8 ft 8 in	2.6
S	11 ft 3 in	3.4
T	22 ft 4 in	6.8
U	8 ft 2 in	2.5
V	16 ft 1.5 in	4.9
W	11 ft 7 in	3.5
X	2 ft 3 in	0.7
Y	22 ft 1 in	6.7
Z	43 ft	13.1
AA	0.72 Degrees	0.72 Degrees

Note

The values shown for locator A, C, W, Z, and AA are the greatest possible variations in attitude due to the variation of aircraft weight and gravity.

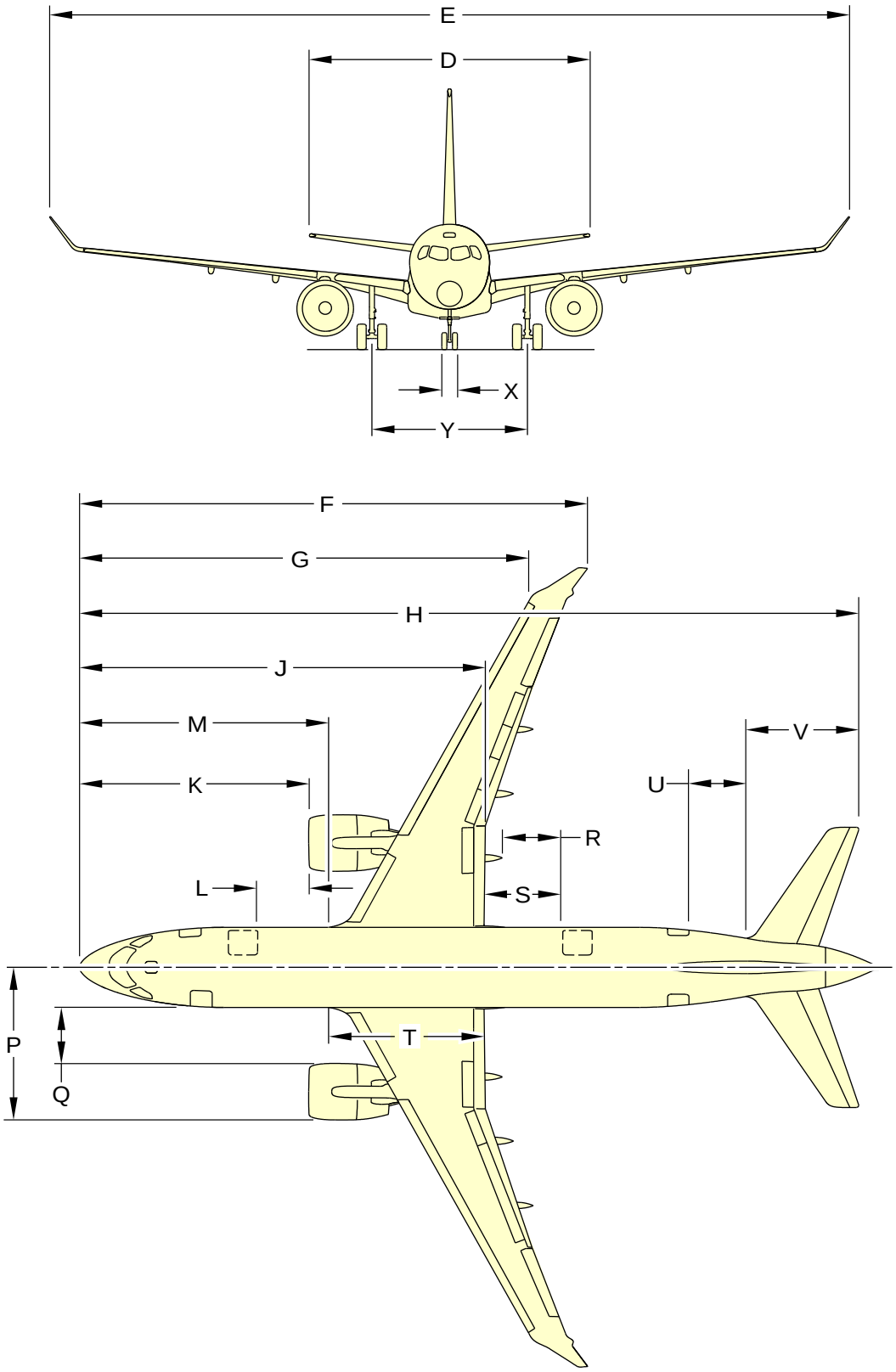

ICN-BD500-A-J061000-A-3AB48-00004-A-002-01

Figure 1 General aircraft dimensions

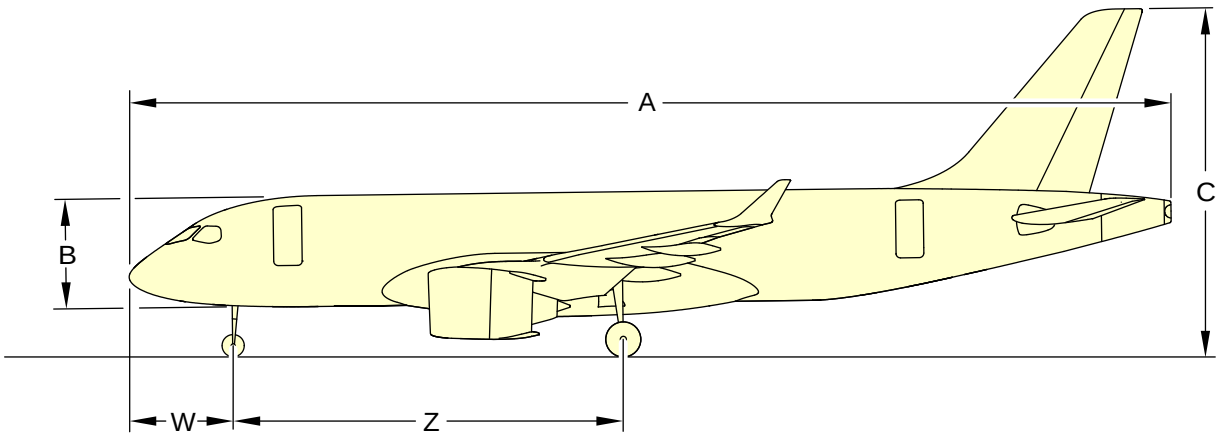

ICN-BD500-A-J061000-A-3AB48-00005-A-002-01

Figure 2 General aircraft dimensions

3 Doors dimensions

- Refer to Table 3 and Fig. 3 for cabin doors dimensions.

Table 3 Cabin doors dimensions

	Dimensions (ft)	Dimensions (m)
Main Entrance Door		
Height	6.17	1.88
Width	2.67	0.81
Service Door		
Height	5.00	1.52
Width	2.50	0.76
Aft Entrance Door		
Height	6.00	1.83
Width	2.50	0.76
Service Door		
Height	5.00	1.52
Width	2.50	0.76
Over-Wing Emergency Exit Door		
Height	3.53	1.08
Width	1.94	0.59

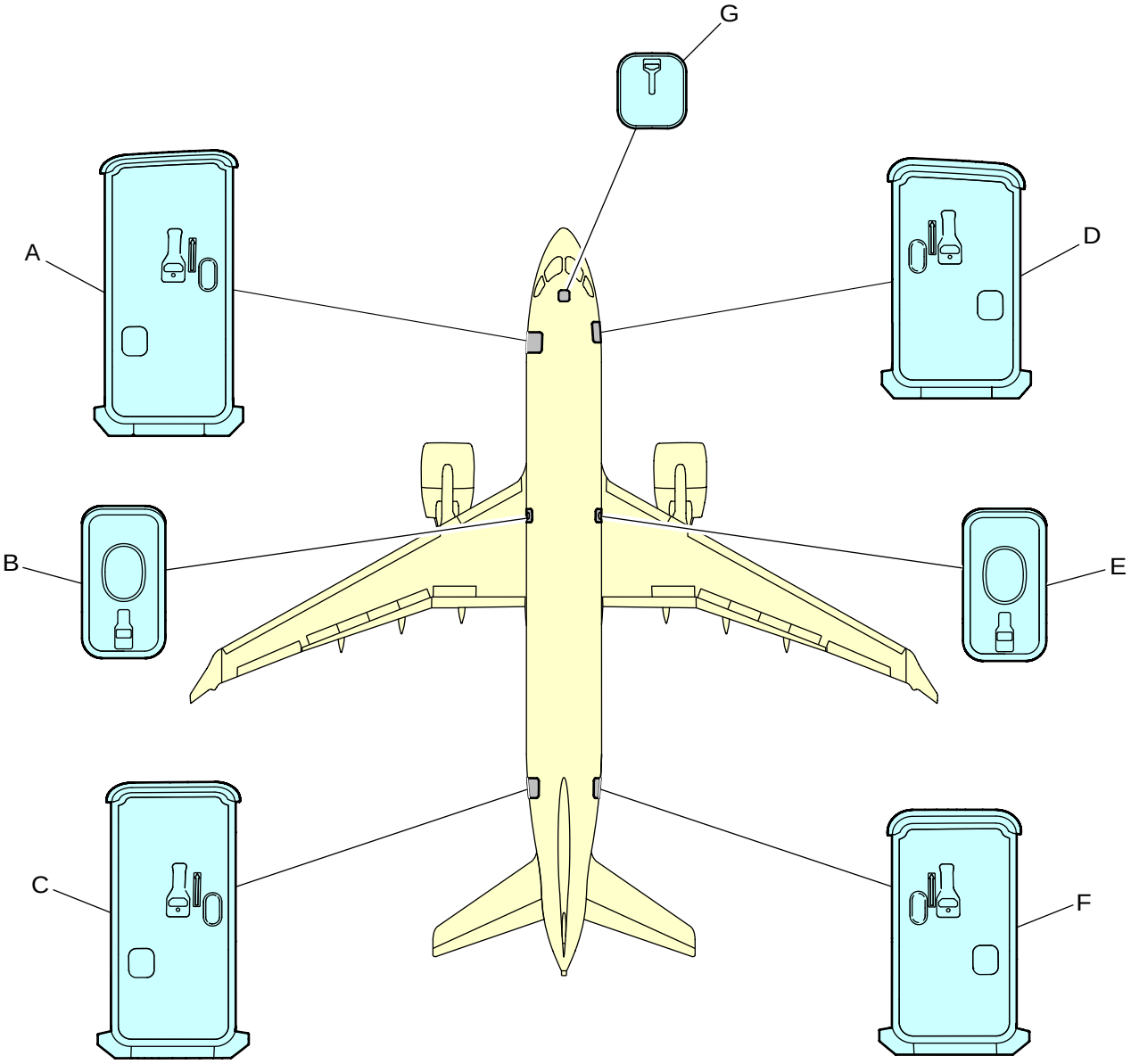

ICN-BD500-A-J061000-A-3AB48-20825-A-002-01

Figure 3 Aircraft doors dimensions

4 Aircraft areas

- Refer to Table 4 and Fig. 4 for aircraft areas.

Table 4 General aircraft areas

Description	Area (ft²)	Area (m²)
ESDU wing area (including ailerons, flaps, spoilers and area within the fuselage)	1208.9	112.3
Total horizontal stabilizer area (including elevator)	313.5	29.1
Total vertical stabilizer area (including rudder)	223.6	20.8

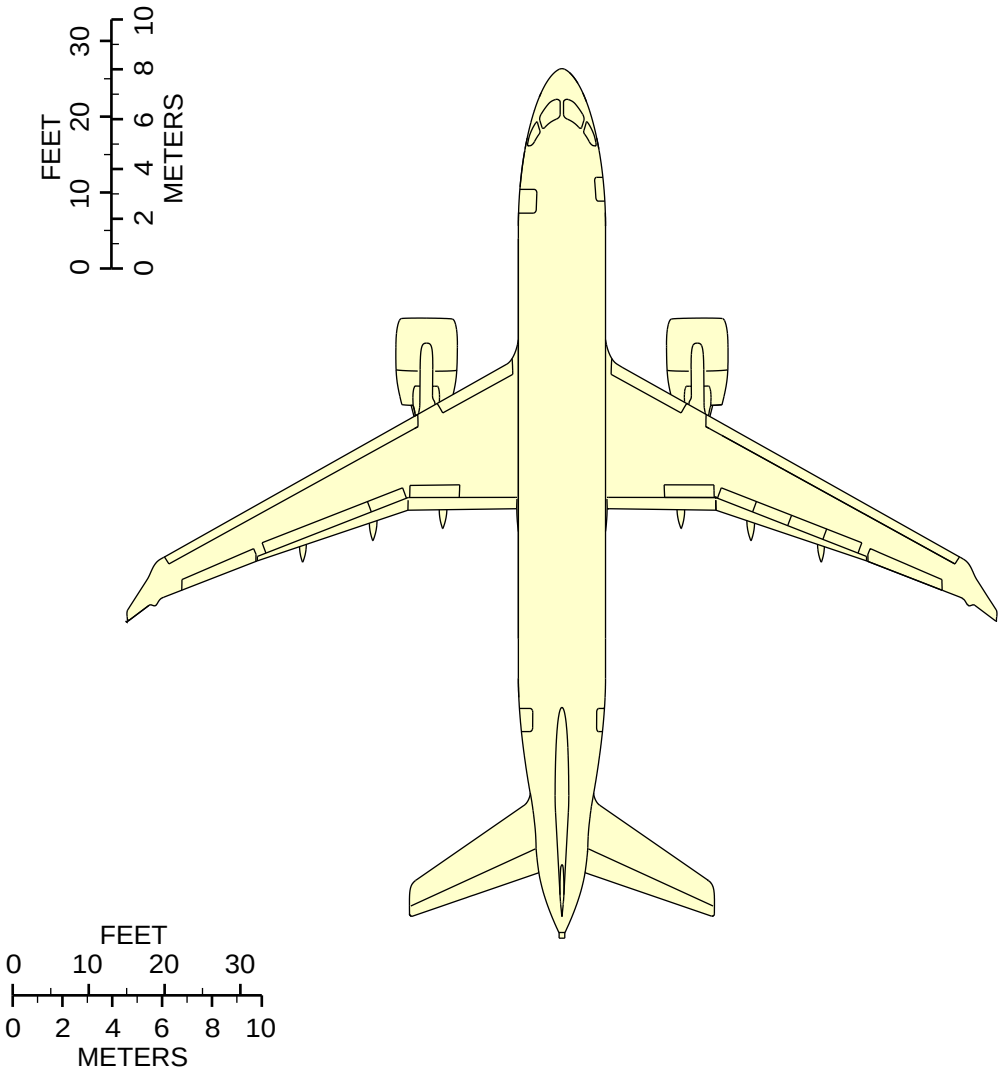

NOTES

1. Scale: 1 in. = 25 ft (1 cm = 3 m)
2. When printing this illustration, make sure to adjust for proper scaling.

ICN-BD500-A-J061000-A-3AB48-00006-A-001-01

Figure 4 Scaled drawing (A220-100)

Aircraft dimensions A220-300 - Technical data

Applicability: 55001-59999

Table of contents

Page

Aircraft dimensions A220-300 - Technical data..... 1
References..... 1
Description..... 1
1 General..... 1
2 Aircraft dimensions..... 1
3 Door dimensions..... 5
4 Aircraft areas..... 7

List of tables

Page

1 References..... 1
2 General aircraft dimensions..... 1
3 Cabin door dimensions..... 5
4 General aircraft areas..... 7

List of figures

Page

1 General aircraft dimensions A220-300..... 3
2 General aircraft dimensions side view A220-300..... 4
3 Aircraft door dimensions A220-300..... 6
4 Scaled drawing A220-300..... 8

References

Table 1 References

Data Module/Technical Publication	Title
None	

Description

1 General

- This section contains general data about the aircraft dimensions, areas and clearances.

2 Aircraft dimensions

- Refer to Table 2 , Fig. 1 and Fig. 2 for aircraft dimensions.

Table 2 General aircraft dimensions

Description	Dimension (ft)	Dimension (m)
A	1524.02 in.	38 m 71 cm

Description	Dimension (ft)	Dimension (m)
B	146.46 in.	3 m 72 cm
C	464.17 in.	11 m 79 cm
D	483.07 in.	12 m 27 cm
E	1381.10 in.	35 m 08 cm
F	957.09 in.	24 m 31 cm
G	857.09 in.	21 m 77 cm
H	1488.19 in.	37 m 80 cm
J	783.07 in.	19 m 89 cm
K	479.13 in.	12 m 17 cm
L	172.05 in.	4 m 37 cm
M	512.99 in.	13 m 03 cm
P	262.99 in.	6 m 68 cm
Q	96.06 in.	2 m 44 cm
R	166.93 in.	4 m 24 cm
S	198.03 in.	5 m 03 cm
T	268.11 in.	6 m 81 cm
U	98.03 in.	2 m 49 cm
V	193.31 in.	4 m 91 cm
W	138.98 in.	3 m 53 cm
X	27.17 in.	0 m 69 cm
Y	264.96 in.	6 m 73 cm
Z	600.00 in.	15 m 24 cm

Note

The values shown for locator C, W, Z, are the greatest possible variations in attitude due to the variation of aircraft weight and gravity.

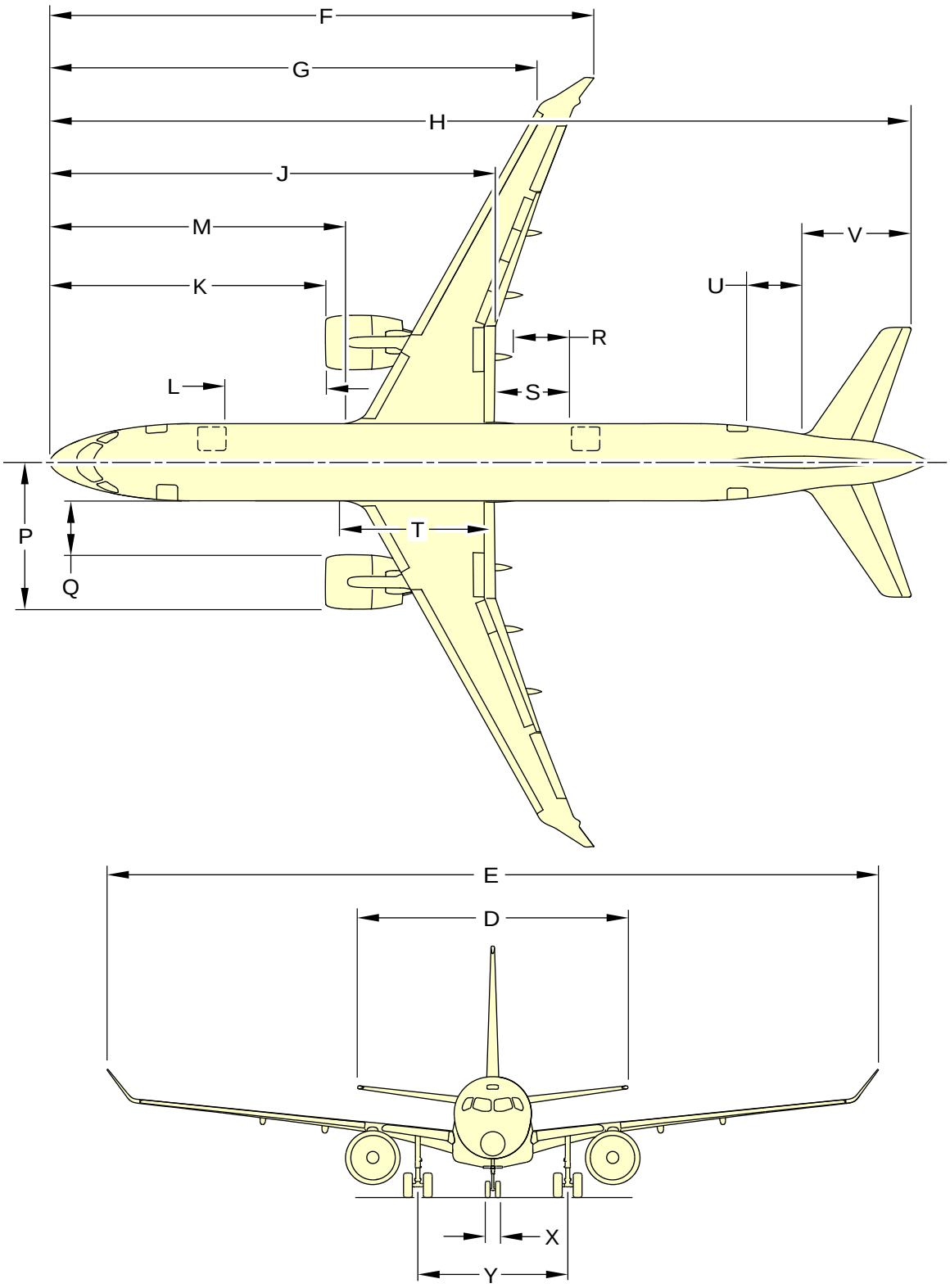

ICN-BD500-A-J061000-A-3AB48-24295-A-001-01

Figure 1 General aircraft dimensions A220-300

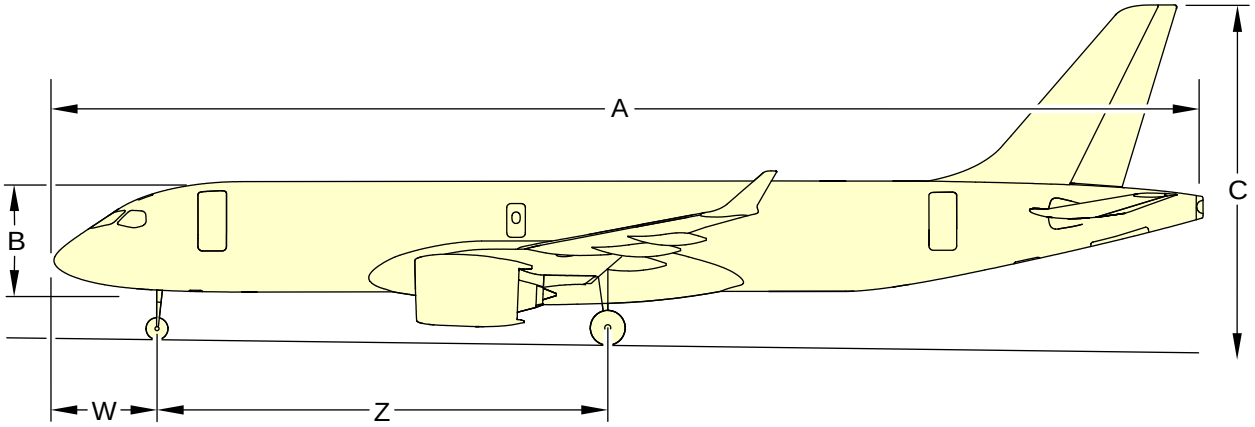

ICN-BD500-A-J061000-A-3AB48-24296-A-001-01

Figure 2 General aircraft dimensions side view A220-300

3 Door dimensions

- Refer to Table 3 and Fig. 3 for cabin door dimensions.

Table 3 Cabin door dimensions

	Dimensions (ft)	Dimensions (m)
Main entrance door		
Height	6.17	1.88
Width	2.67	0.81
Forward service door		
Height	5.00	1.52
Width	2.50	0.76
Aft entrance door		
Height	6.00	1.83
Width	2.50	0.76
Aft service door		
Height	5.00	1.52
Width	2.50	0.76
Over-wing emergency exit door		
Height	3.53	1.08
Width	1.94	0.59

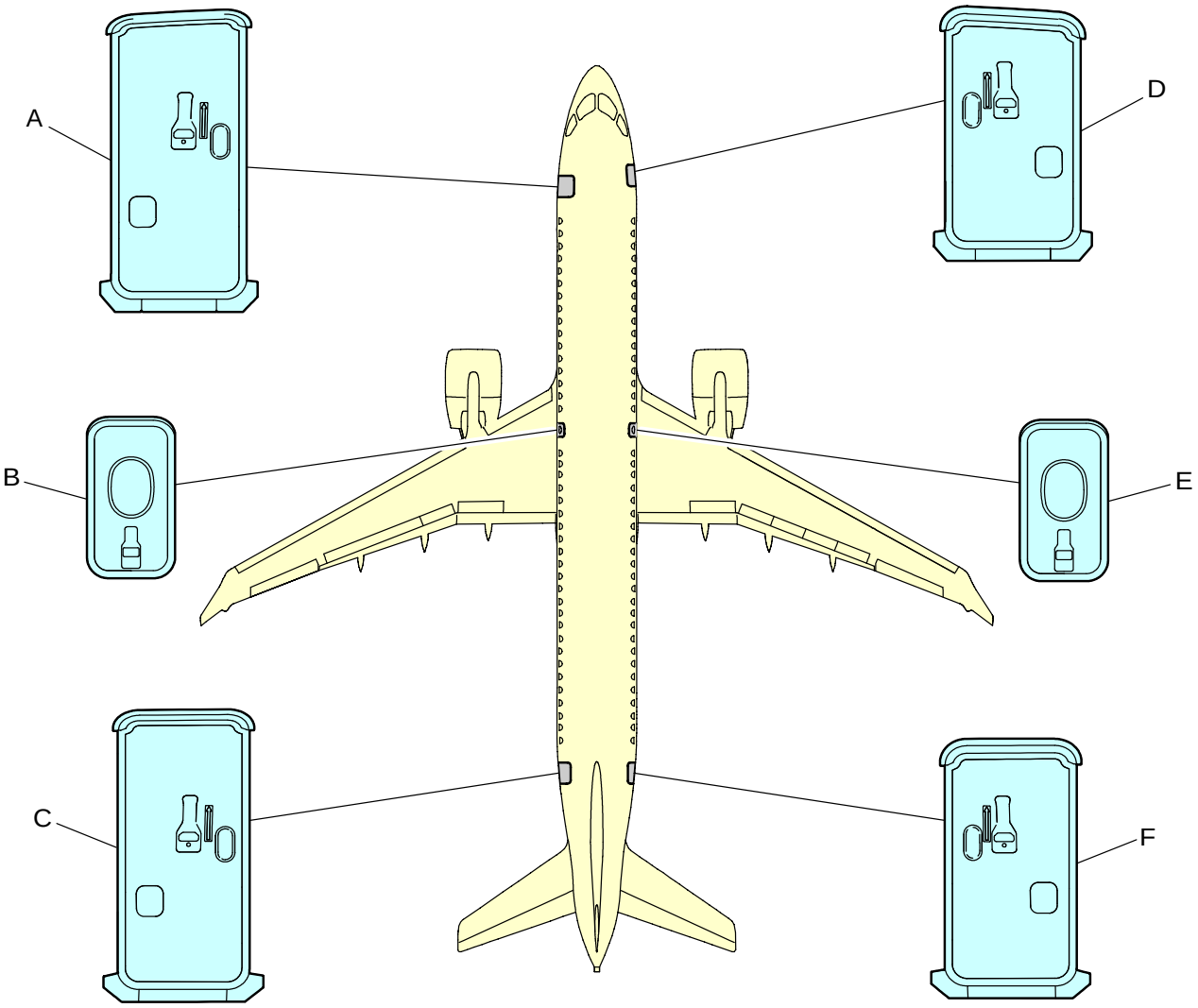

ICN-BD500-A-J061000-A-3AB48-24297-A-002-01

Figure 3 Aircraft door dimensions A220-300

4 Aircraft areas

- Refer to Table 4 and Fig. 4 for aircraft areas.

Table 4 General aircraft areas

Description	Area (ft²)	Area (m²)
ESDU wing area (including ailerons, flaps, spoilers and area in the fuselage)	1208.9	112.3
Total horizontal stabilizer area (including elevator)	313.5	29.1
Total vertical stabilizer area (including rudder)	223.6	20.8

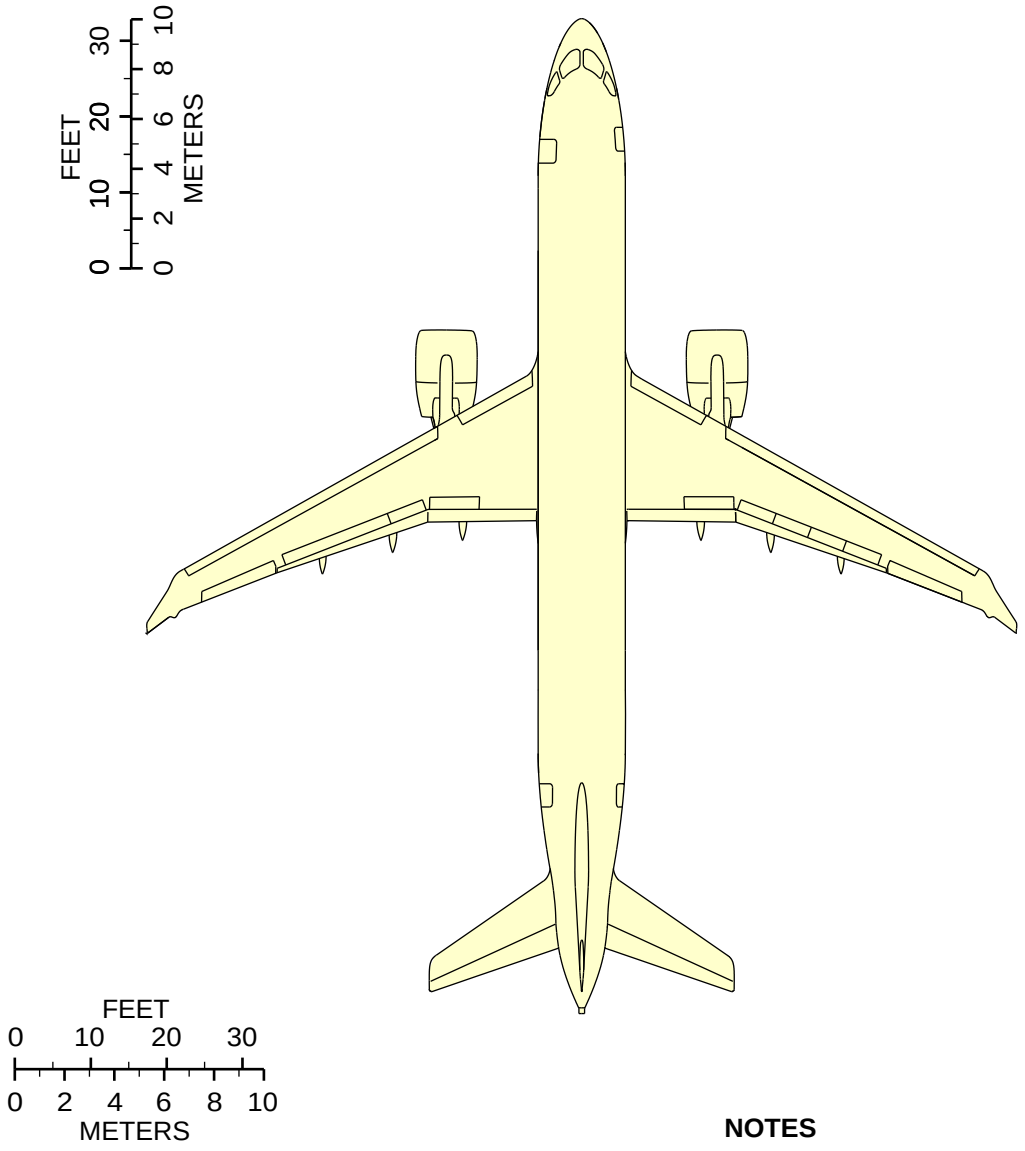

NOTES

1. Scale: 1 in. = 25 ft (1 cm = 3 m)
2. When printing this illustration, make sure to adjust for proper scaling.

ICN-BD500-A-J061000-A-3AB48-25078-A-001-01

Figure 4 Scaled drawing A220-300

Ground clearances - Technical data

Applicability: 50001-54999, 55001-59999

Table of contents

Page

Ground clearances - Technical data..... 1
References..... 1
Description..... 1
1 Introduction..... 1
2 Ground clearances..... 1
3 Ground clearances..... 4

List of tables

Page

1 References..... 1
2 Ground clearances..... 1
3 Ground clearances..... 4

List of figures

Page

1 Ground clearances (A220-100)..... 3
2 Ground clearances (A220-300)..... 5

References

Table 1 References

Data Module/Technical Publication	Title
None	

Description

1 Introduction

This data module contains the ground clearances.

Applicability: 50001-54999

2 Ground clearances

Table 2 Ground clearances

Locator	Description	Minimum	Maximum
A	Fuselage top	209.3 in. (531.62 cm)	214.4 in. (544.58 cm)
B	Pilot escape hatch	188.2 in. (478.02 cm)	193.4 in. (491.24 cm)
C	Forward avionic equipment bay door	63.2 in. (160.53 cm)	67.7 in. (171.96 cm)

Locator	Description	Minimum	Maximum
D	Forward service door (RHS)	117.5 in . (298.45 cm)	122.6 in. (311.40 cm)
E	Forward passenger door (LHS)	117.8 in. (299.21 cm)	122.8 in. (311.91 cm)
F	Forward cargo compart-ment door (RHS)	66.8 in. (169.67 cm)	71.7 in. (182.12 cm)
G	Nacelle	19.7 in. (50.04 cm)	24.0 in. (60.96 cm)
H	Overwing emergency exit (LHS & RHS)	138.6 in. (352.04 cm)	143.1 in. (363.48 cm)
J	Mid avionic equipment bay door	56.2 in. (142.75 cm)	61.6 in. (156.46 cm)
K	Aft cargo compartment door (RHS)	72.9 in. (185.17 cm)	79.8 in. (202.70 cm)
L	Wing tip (No deflection)	229.2 in. (582.17 cm)	236.2 in. (600.20 cm)
M	Aft service door (RHS)	126.2 in (320.55 cm)	134.7 in. (342.14 cm)
N	Aft passenger door (LHS)	126.2 in. (320.55 cm)	134.7 in. (342.14 cm)
P	Aft avionic equipment door	111.7 in. (283.72 cm)	121.3 in. (308.10 cm)
Q	APU door	140.4 in. (356.62 cm)	151.2 in. (384.05 cm)
R	Tail	452.7 in. (1149.86 cm)	463.8 in. (1178.05 cm)
S	Winglet	168 in. (426.72 cm)	176.4 in. (448.06 cm)

Note

Vertical clearances shown are the greatest possible variations in attitude due to the variation of aircraft weight and center of gravity.

Applicability: 50001-54999

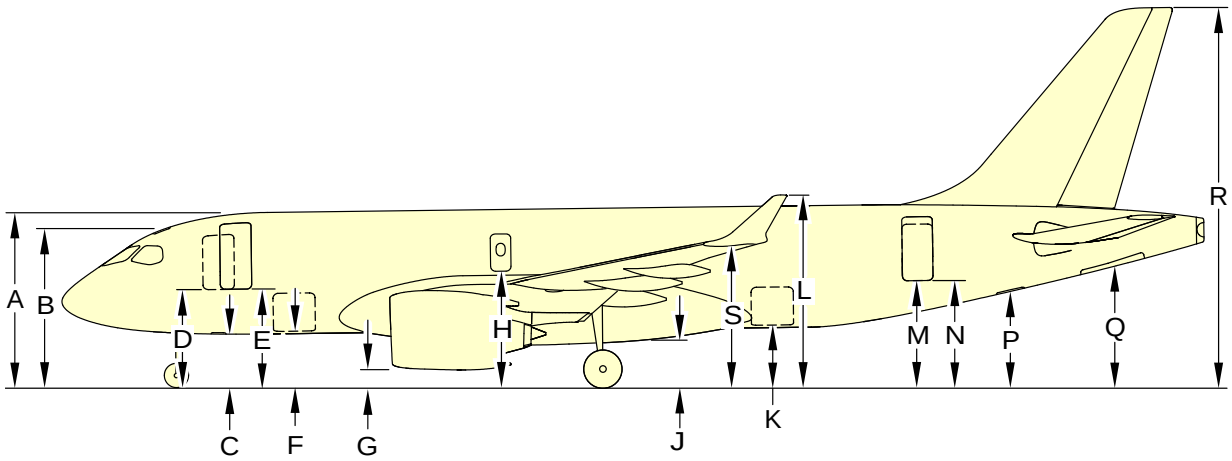

ICN-BD500-A-J000000-A-3AB48-21709-A-004-01

Figure 1 Ground clearances (A220-100)

Applicability: 55001-59999

3 Ground clearances

Table 3 Ground clearances

Locator	Description	Minimum	Maximum
A	Fuselage top	212.0 in. (538.48 cm)	215.7 in. (547.88 cm)
B	Pilot escape hatch	191.2 in. (485.65 cm)	195.1 in. (495.55 cm)
C	Forward avionic equipment bay door	65.3 in. (165.86 cm)	69.1 in. (175.51 cm)
D	Forward service door (RHS)	121.4 in . (308.36 cm)	125.2 in. (318.01 cm)
E	Forward passenger door (LHS)	121.5 in. (308.61 cm)	125.3 in. (318.26 cm)
F	Forward cargo compartment door (RHS)	69.2 in. (175.77 cm)	72.8 in. (184.91 cm)
G	Nacelle	22.9 in. (58.17 cm)	25.9 in. (665.79 cm)
H	Overwing emergency exit (LHS & RHS)	140.9 in. (357.89 cm)	143.8 in. (365.25 cm)
J	Mid avionic equipment bay door	58.5 in. (148.59 cm)	61.8 in. (156.97 cm)
K	Aft cargo compartment door (RHS)	75.7 in. (192.28 cm)	79.9 in. (202.95 cm)
L	Wing tip (No deflection)	230.4 in. (585.22 cm)	234.3 in. (595.12 cm)
M	Aft service door (RHS)	128.1 in (325.37cm)	133 in. (337.82 cm)
N	Aft passenger door (LHS)	128.1 in. (325.37 cm)	133 in. (337.82 cm)
P	Aft avionic equipment door	114.6 in. (291.08 cm)	119.9 in. (304.55 cm)
Q	APU door	142.2 in. (361.19 cm)	148.0 in. (375.92 cm)
R	Tail	455.8 in. (1157.73 cm)	461.9 in. (1173.23 cm)
S	Winglet	168 in. (426.72 cm)	176.4 in. (448.06 cm)

Note

Vertical clearances shown are the greatest possible variations in attitude due to the variation of aircraft weight and center of gravity.

Applicability: 55001-59999

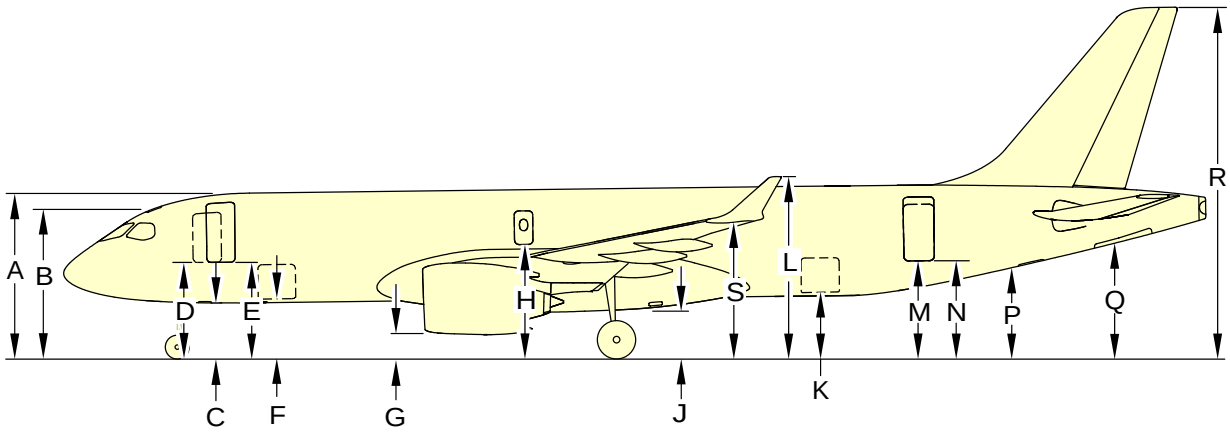

ICN-BD500-A-J000000-A-3AB48-21710-A-004-01

Figure 2 Ground clearances (A220-300)

Intentionally left blank

A220

Door clearances and clear opening dimensions - Technical data

Applicability: 50001-54999, 55001-59999

Table of contents

Page

Door clearances and clear opening dimensions - Technical data..... 1
References..... 1
Description..... 2
1 Introduction..... 2
2 General..... 2
2.1 Forward Passenger Door (FPD), Aft Passenger Door (APD)..... 2
2.2 Overwing Emergency Exit Door (OWEED)..... 2
2.3 Flight Crew Emergency Escape (FCEE) hatch..... 3
2.4 Forward Cargo Compartment Door (FCCD), Aft Cargo Compartment Door (ACCD). 3
2.5 Forward Service Door (FSD), Aft Service Door (ASD)..... 3
2.6 Forward Avionics Bay (FAB) door..... 3
2.7 Mid Avionics Bay (MAB) door..... 4
2.8 Aft Equipment Bay (AEB) door..... 4
2.9 Auxiliary Power Unit (APU) doors..... 4
3 Doors distance from nose..... 4
4 Aircraft doors dimensions..... 8

List of tables

Page

1 References..... 1
2 Doors distance from nose (A220-100)..... 4
3 Doors distance from nose (A220-300)..... 5
4 Aircraft doors dimensions (A220-100 and A220-300)..... 8

List of figures

Page

1 Door distance from nose (A220-100 and A220-300)..... 7
2 Aircraft doors dimensions..... 10
3 Forward passenger door opening and clearances..... 12
4 Aft passenger door opening and clearances..... 13
5 Forward cargo compartment door opening and clearances..... 14
6 Aft cargo compartment door opening and clearances..... 15
7 Forward service door opening and clearances..... 16
8 Aft service door opening and clearances..... 17
9 Overwing emergency exit door (OWEED)..... 18
10 Flight crew emergency escape hatch (FCEE)..... 19
11 Forward avionics bay door (FAB)..... 20
12 Mid avionics bay door (MAB)..... 21
13 Aft equipment bay door (AEB)..... 22
14 Tailcone door opening..... 23

References

Table 1 References

Data Module/Technical Publication	Title
None	

Description

1 Introduction

This data module contains data on the aircraft door clearances and clear opening dimensions.

2 General

A general description of the doors is as follows:

2.1 Forward Passenger Door (FPD), Aft Passenger Door (APD)

The two (2) semi-plug type doors on the left side of the aircraft provide access for passengers and crew. Door 1L is considered the primary entrance, located at the front of the aircraft, while door 2L, rear of the aircraft, provides a secondary entrance for passengers and ground servicing crew to board/de-board the aircraft.

Each door is classified as a type C floor-level exit. Due to the sill height, each door incorporates an emergency escape slide system.

Each door translates outwards from the closed position, supported by a hinged arm and stabilizer bars, to rest parallel to the fuselage in the open position.

Each door is operable from the exterior and interior of the aircraft and features an inspection window to allow verification of the outside conditions from the interior. The exterior operating handle has a linear motion and is interconnected to a vent flap system to provide pressure equalization between the aircraft and the ambient air prior to be opened.

Each door is fully lined and insulated to meet thermal and noise performance requirements.

Each door handle feature provision for a lock barrel.

For both passenger doors distance from the nose, refer to Table 2 (A220-100), Table 3 (A220-300) and Fig. 1 . For both doors dimensions, refer to Table 4 . For the Forward Passenger Door (FPD) opening and clearances, refer to Fig. 3 . For the Aft Passenger Door (APD) opening and clearances, refer to Fig. 4 .

2.2 Overwing Emergency Exit Door (OWEED)

The two Overwing Emergency Exit Door (OWEED)s are type III semi-plug type doors.

The exits are provided with an operating handle with removable cover and are fitted with a standard sized passenger compartment window. Each door is fully lined and insulated to meet thermal and noise performance requirements.

The door rotates upwards from the closed position, supported by an hinged arm to rest in open position. The sequence to open the door is automatically supported by the energy stored in its own mechanism.

For emergency access to the passenger compartment, the doors may be opened from an exterior handle.

Due to the exit path height from the ground, an off wing emergency escape slide system is provided.

For the OWEEDs distance from the nose, refer to Table 2 (A220-100), Table 3 (A220-300) and Fig. 1 . For both doors dimensions, refer to Table 4 . For the OWEEDs opening and clearances refer to Fig. 9 .

2.3 Flight Crew Emergency Escape (FCEE) hatch

The flight compartment is outfitted with a single, inward-opening overhead escape hatch.

For the Flight Crew Emergency Escape (FCEE) hatch distance from the nose, refer to Table 2 (A220-100), Table 3 (A220-300) and Fig. 1 . For the FCEE hatch dimensions, refer to Table 4 . For FCEE hatch opening and clearances refer to Fig. 10 .

2.4 Forward Cargo Compartment Door (FCCD), Aft Cargo Compartment Door (ACCD)

The two doors are provided to allow cargo compartment to be loaded and unloaded.

The semi plug forward and aft cargo doors are identical components, each hinged along the top edge of its frame.

Each door incorporates an exterior lock/unlock handle with linear motion that is interconnected to a vent flap system and provide pressure equalization between the aircraft and the ambient air prior to be opened.

An actuation system with a switch panel is provided to facilitate the operation of the doors to open or close.

Each door is fully lined and insulated to meet thermal and noise performance requirements.

Each door handle feature provision for a lock barrel.

For both cargo doors distance from the nose, refer to Table 2 (A220-100), Table 3 (A220-300) and Fig. 1 . For the doors dimensions, refer to Table 4 . For the Forward Cargo Compartment Door (FCCD) opening and clearances, refer to Fig. 5 . For the Aft Cargo Compartment Door (ACCD) opening and clearances, refer to Fig. 6 .

2.5 Forward Service Door (FSD), Aft Service Door (ASD)

The two (2) semi-plug type doors are provided on the right side of the aircraft to provide access for the forward (door 1R) and aft (door 2R) galley service areas.

Each door is classified as a type C floor level exit. Due to the sill height, each door incorporates an emergency escape slide system.

Each door translates outwards from the closed position, supported by a hinged arm and stabilizer bars, to rest parallel to the fuselage in the open position.

Each door is operable from the exterior and interior of the aircraft and features an inspection window to allow verification of the outside conditions from the interior. The exterior operating handle has a linear motion and is interconnected to a vent flap system to provide pressure equalization between the aircraft and the ambient air prior to be opened.

Each door is fully lined and insulated to meet thermal and noise performance requirements.

For both service doors distance from the nose, refer to Table 2 (A220-100), Table 3 (A220-300) and Fig. 1 . For the service doors dimensions, refer to Table 4 . For the Forward Service Door (FSD) opening and clearances, refer to Fig. 7 . For the Aft Service Door (ASD) opening and clearances, refer to Fig. 8 .

2.6 Forward Avionics Bay (FAB) door

A plug type door is provided in the forward fuselage to gain access to the pressurized forward equipment compartment.

The door is fitted with a stowable operating handle.

For the Forward Avionics Bay (FAB) door distance from the nose, refer to Table 2 (A220-100), Table 3 (A220-300) and Fig. 1 . For dimensions, refer to Table 4 . For the FAB door opening and clearances, refer to Fig. 11 .

2.7 Mid Avionics Bay (MAB) door

A plug type door is provided in the mid fuselage to gain access to the pressurized mid equipment compartment.

The door is fitted with a stowable operating handle.

For the Mid Avionics Bay (MAB) door distance from the nose, refer to Table 2 (A220-100), Table 3 (A220-300) and Fig. 1 . For dimensions, refer to Table 4 . For the MAB door opening and clearances, refer to Fig. 12 .

2.8 Aft Equipment Bay (AEB) door

A door is provided in the aft fuselage to gain access to the non pressurized aft equipment compartment.

The door is fitted with a stowable operating handle.

For the Aft Equipment Bay (AEB) door the distance from the nose, refer to Table 2 (A220-100), Table 3 (A220-300) and Fig. 1 . For dimensions, refer to Table 4 . For the AEB door opening and clearances, refer to Fig. 13 .

2.9 Auxiliary Power Unit (APU) doors

A two clam-shell type doors are provided in the aft fuselage to gain access to the non pressurized, fireproof enclosure of the Auxiliary Power Unit (APU).

For the APU door the distance from the nose, refer to Table 2 (A220-100), Table 3 (A220-300) and Fig. 1 . For dimensions, refer to Table 4 . For the APU doors opening and clearances, refer to Fig. 14 .

3 Doors distance from nose

Applicability: 50001-54999

Table 2 Doors distance from nose (A220-100)

Locator (refer to Fig. 1)	Value in. (cm)
A - APU doors	1227.6 (3118.10)
B - AEB door	1126.2 (2860.55)
C - APD, ASD	1012.0 (2570.48)
D - ACCD door	832.1 (2113.53)

Locator (refer to Fig. 1)	Value in. (cm)
E - MAB door	695.6 (1766.82)
F - OWEED left and right side	516.1 (1310.89)
G - FCCD	256.2 (650.75)
H - FPD	190.0 (482.60)
J - FAB door	180.0 (457.20)
K - FSD	171.2 (434.85)
L - FCEE hatch	110.2 (279.91)

Applicability: 55001-59999

Table 3 Doors distance from nose (A220-300)

Locator (refer to Fig. 1)	Value in. (cm)
A - APU doors	1374.8 (3491.99)
B - AEB door	1273.2 (3233.92)
C - APD, ASD	1159.5 (2945.13)
D - ACCD door	979.4 (2487.66)
E - MAB door	779.4 (1979.67)

Locator (refer to Fig. 1)	Value in. (cm)
F - OWEED left and right side	600.5 (1525.27)
G - FCCD	256.4 (651.25)
H - FPD	190.3 (483.36)
J - FAB door	179.8 (456.69)
K - FSD	171.5 (435.61)
L - FCEE hatch	110.5 (280.67)

Note

The values shown are the greatest possible variations in attitude due to the variation of aircraft weight and gravity.

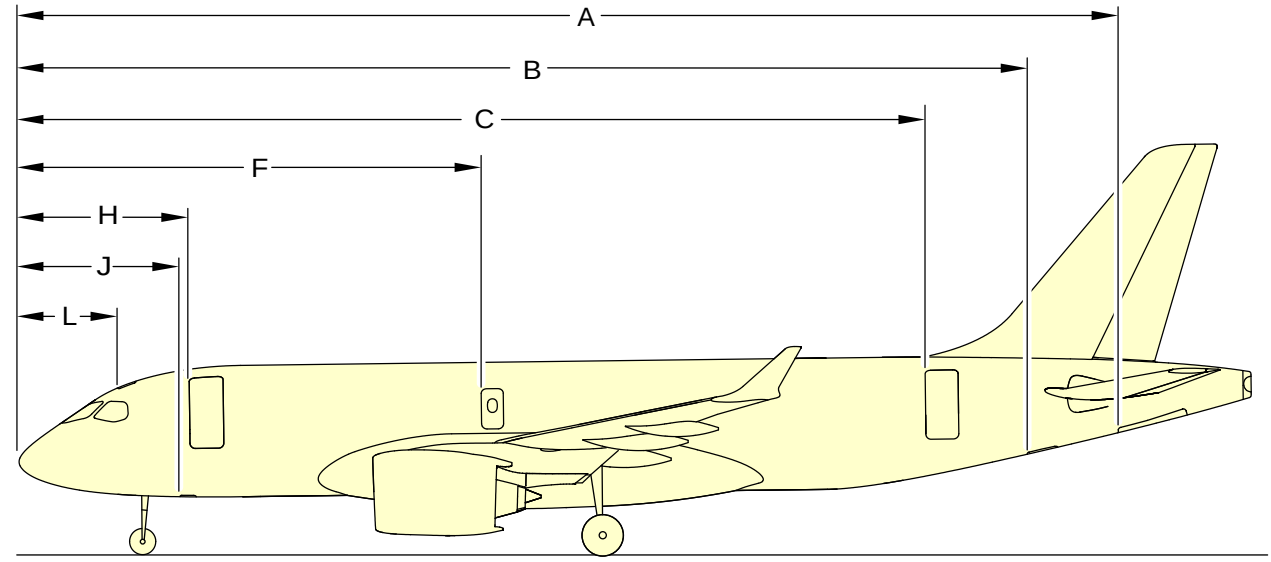

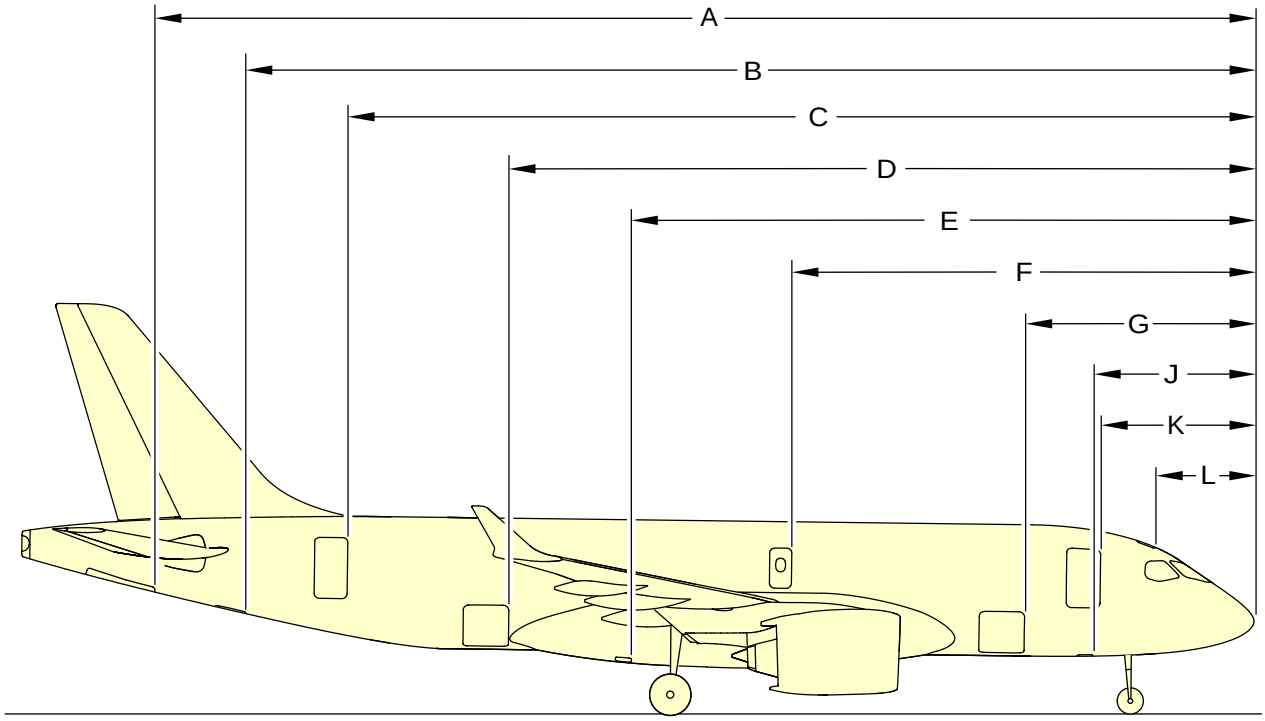

ICN-BD500-A-J061100-A-3AB48-00013-A-001-01

Figure 1 Door distance from nose (A220-100 and A220-300)

4 Aircraft doors dimensions

Table 4 Aircraft doors dimensions (A220-100 and A220-300)

Doors Locator (refer to Fig. 2 thru Fig. 14)	Height in. (cm)	Width in. (cm)
A - FPD - type C exit (door 1L)	74.000 (187.96)	33.250 (84.46)
B - OWEED left side	36.000 (91.44)	20.000 (50.80)
C - APD - type C exit (door 2L)	72.000 (182.88)	30.00 (76.20)
D - FSD - type C exit (door 1R)	60.000 (152.40)	30.000 (76.20)
E - OWEED right side	36.000 (91.44)	20.000 (50.80)
F - ASD - type C exit (door 2R)	60.000 (152.40)	30.000 (76.20)
G - FCEE hatch	22.000 (55.88)	20.000 (50.80)
H - FAB door	17.900 (45.47)	21.800 (55.37)
J - FCCD	33.000 (83.82)	46.750 (118.75)
K - MAB door	21.586 (54.83)	17.80 (45.21)
L - ACCD	33.000 (83.82)	46.750 (118.75)
M - AEB door	28.600 (72.64)	26.90 (68.33)
N - APU doors	D - 79.78 (202.69)	A - 58.77 (149.29)
	E - 80.43 (204.29)	B - 52.86 (134.28)

Doors Locator (refer to Fig. 2 thru Fig. 14)	Height in. (cm)	Width in. (cm)
		C - 46.41 (117.89)

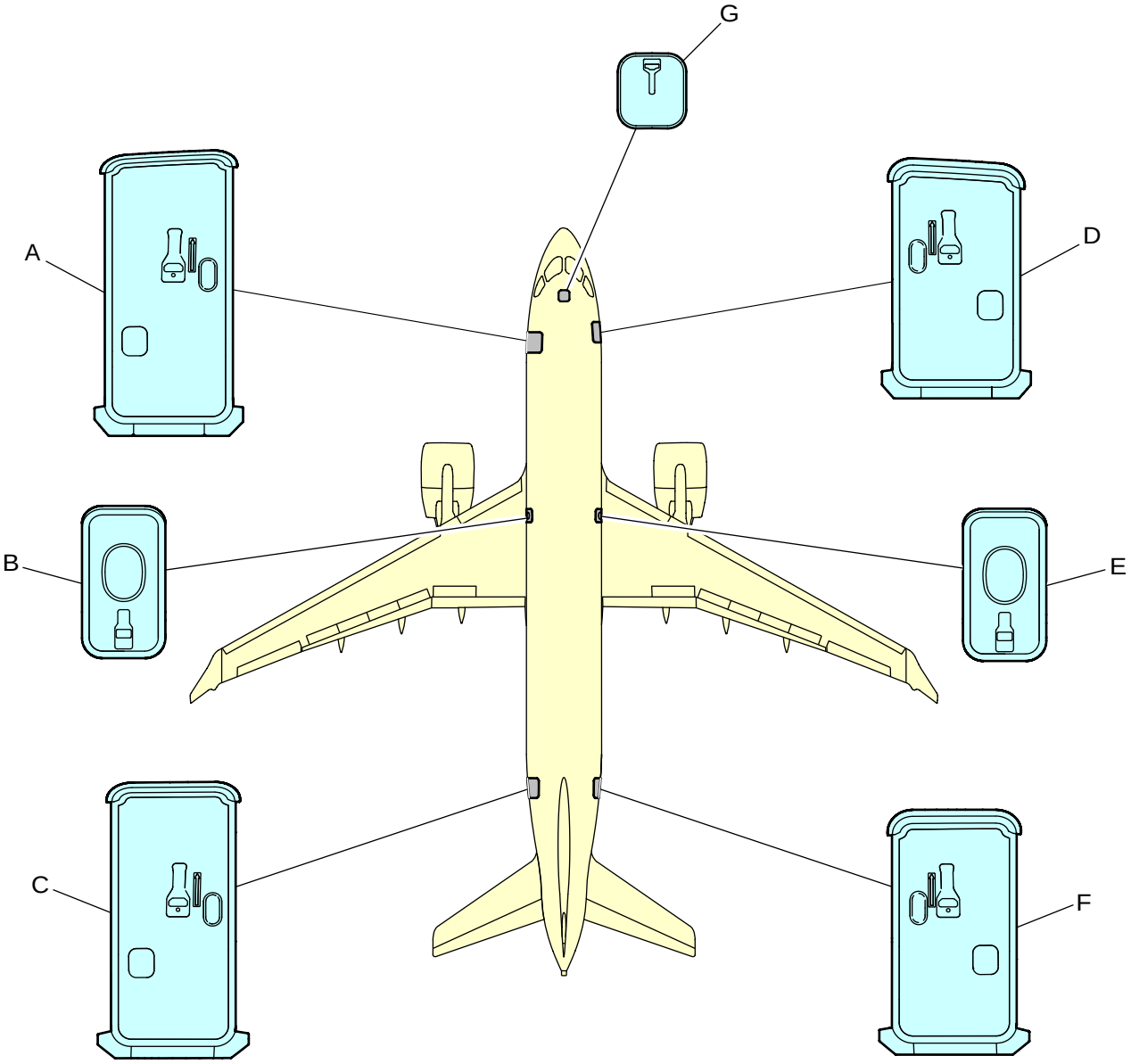

ICN-BD500-A-J061000-A-3AB48-20825-A-002-01

Figure 2 Aircraft doors dimensions - (Sheet 1 of 2)

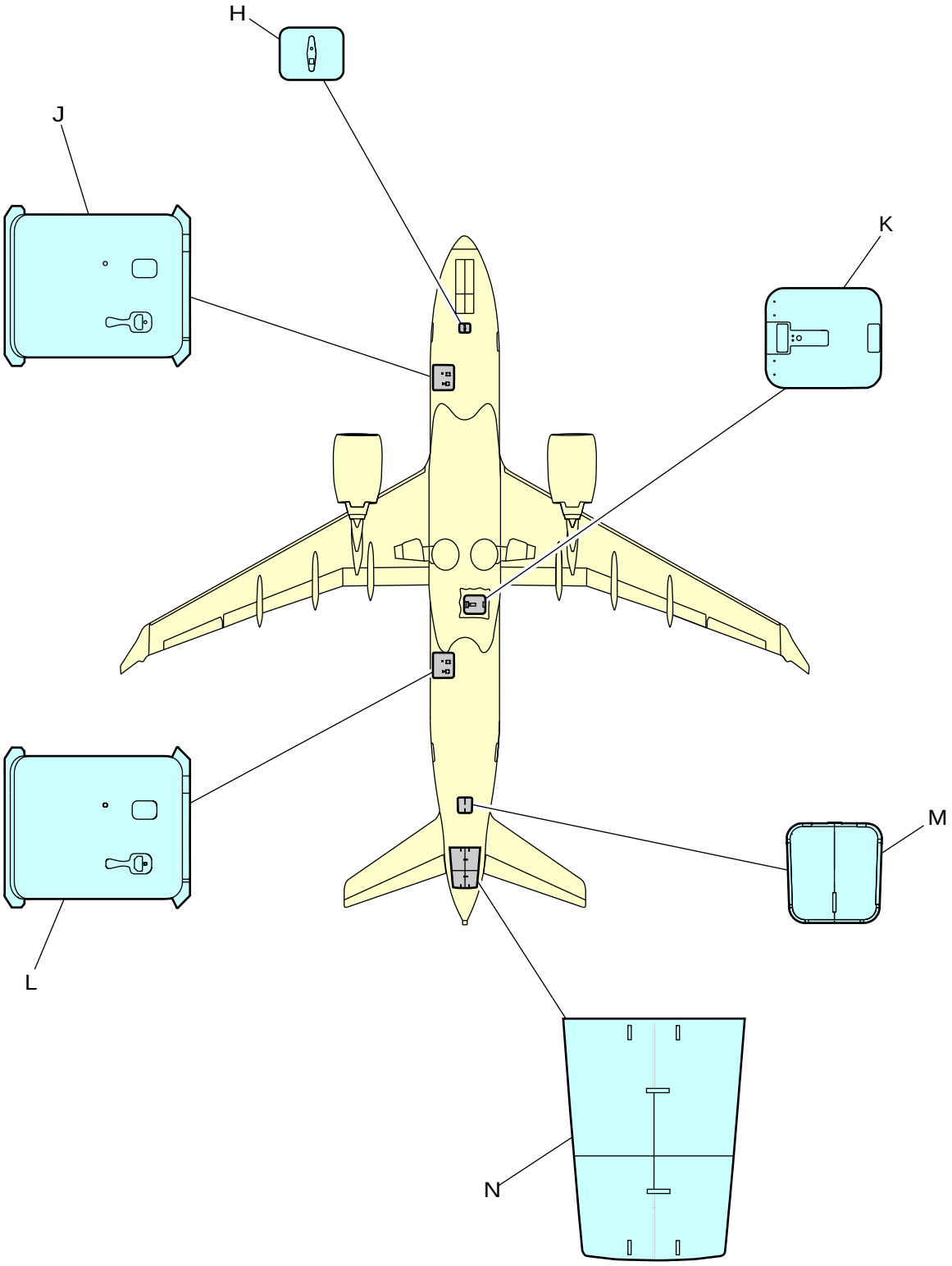

ICN-BD500-A-J061100-A-3AB48-48187-A-001-01

Figure 2 Aircraft doors dimensions - (Sheet 2 of 2)

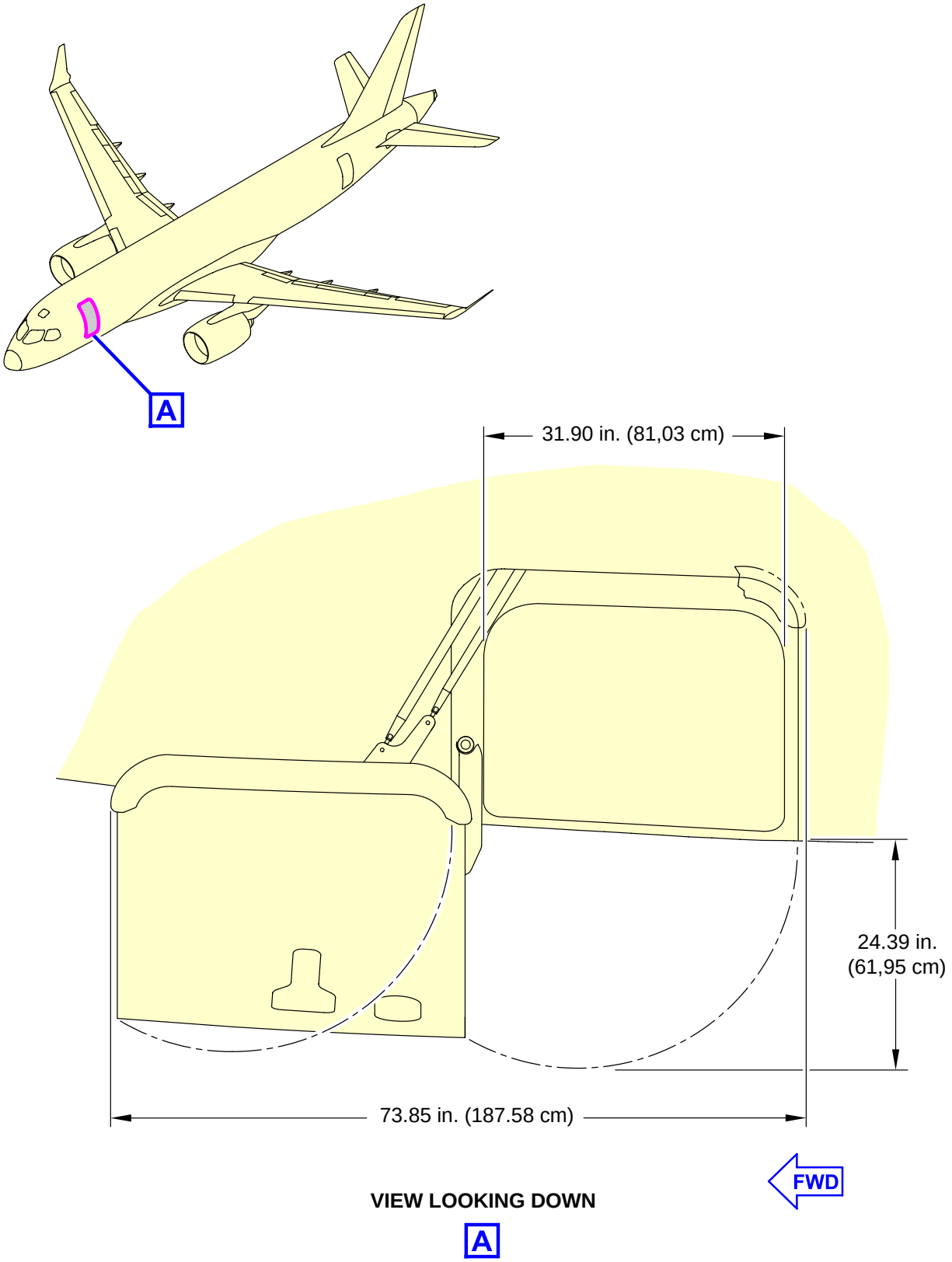

ICN-BD500-A-J061100-A-3AB48-00103-A-004-01

Figure 3 Forward passenger door opening and clearances

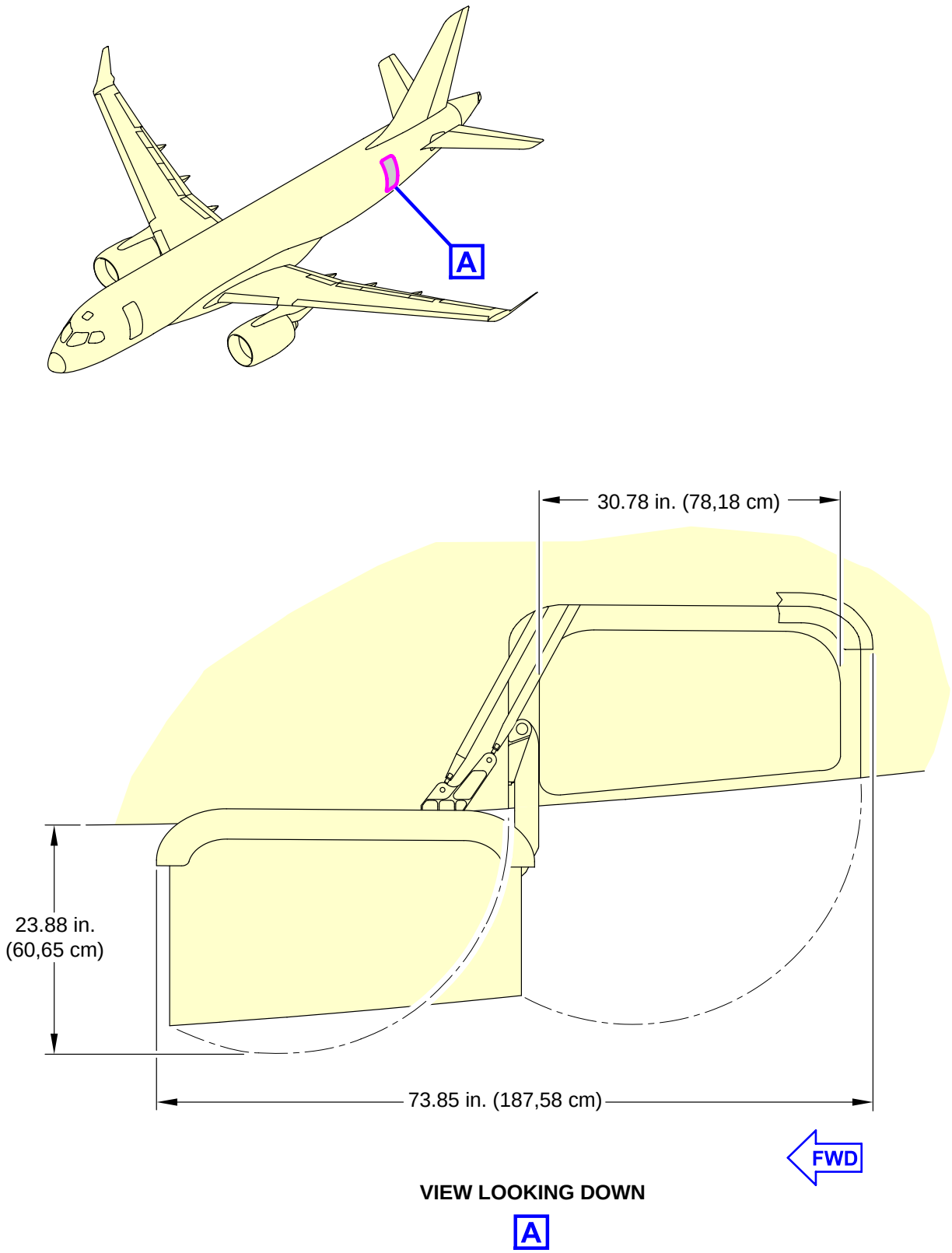

ICN-BD500-A-J061100-A-3AB48-00104-A-004-01

Figure 4 Aft passenger door opening and clearances

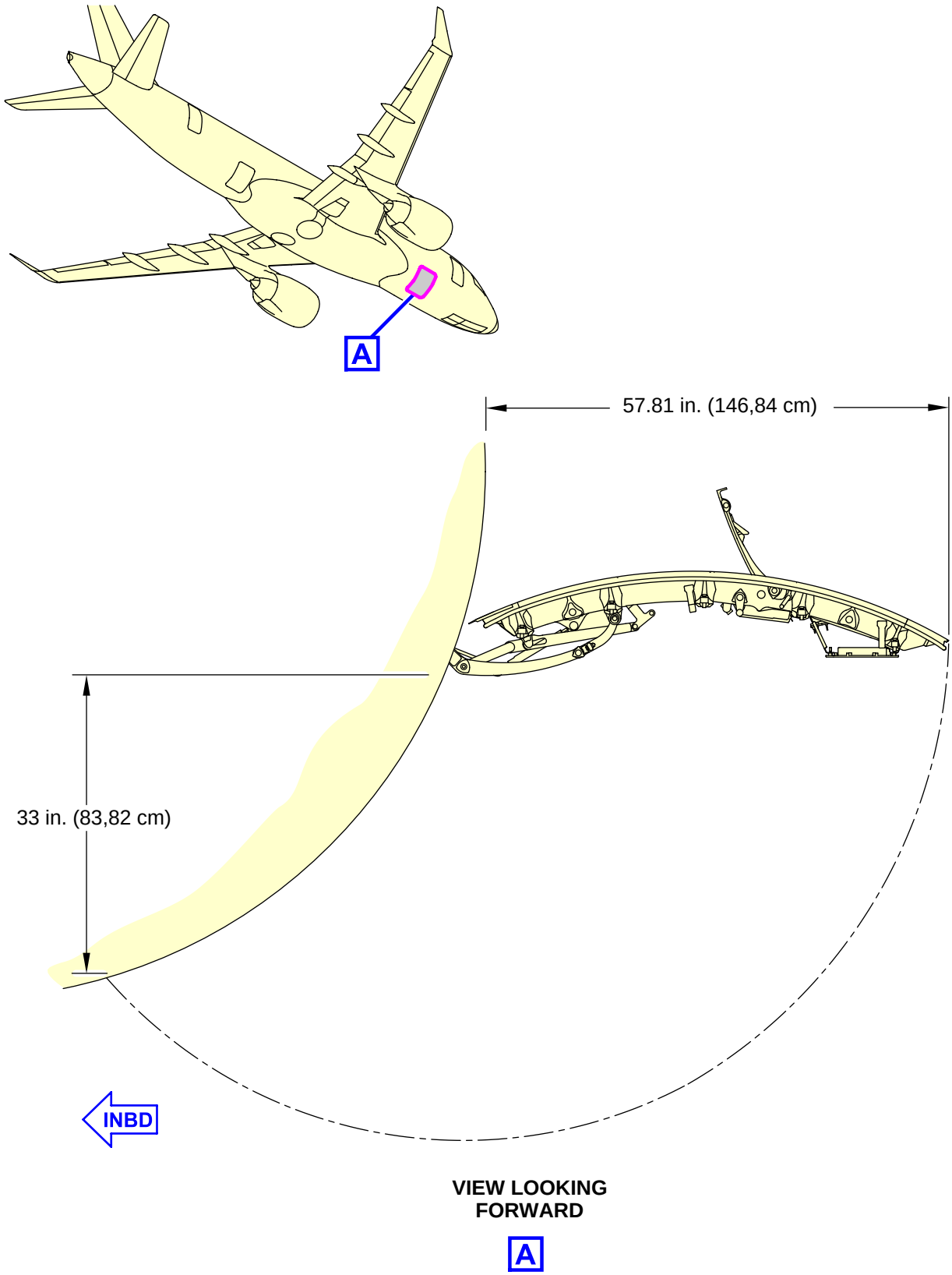

ICN-BD500-A-J061100-A-3AB48-00102-A-003-01

Figure 5 Forward cargo compartment door opening and clearances

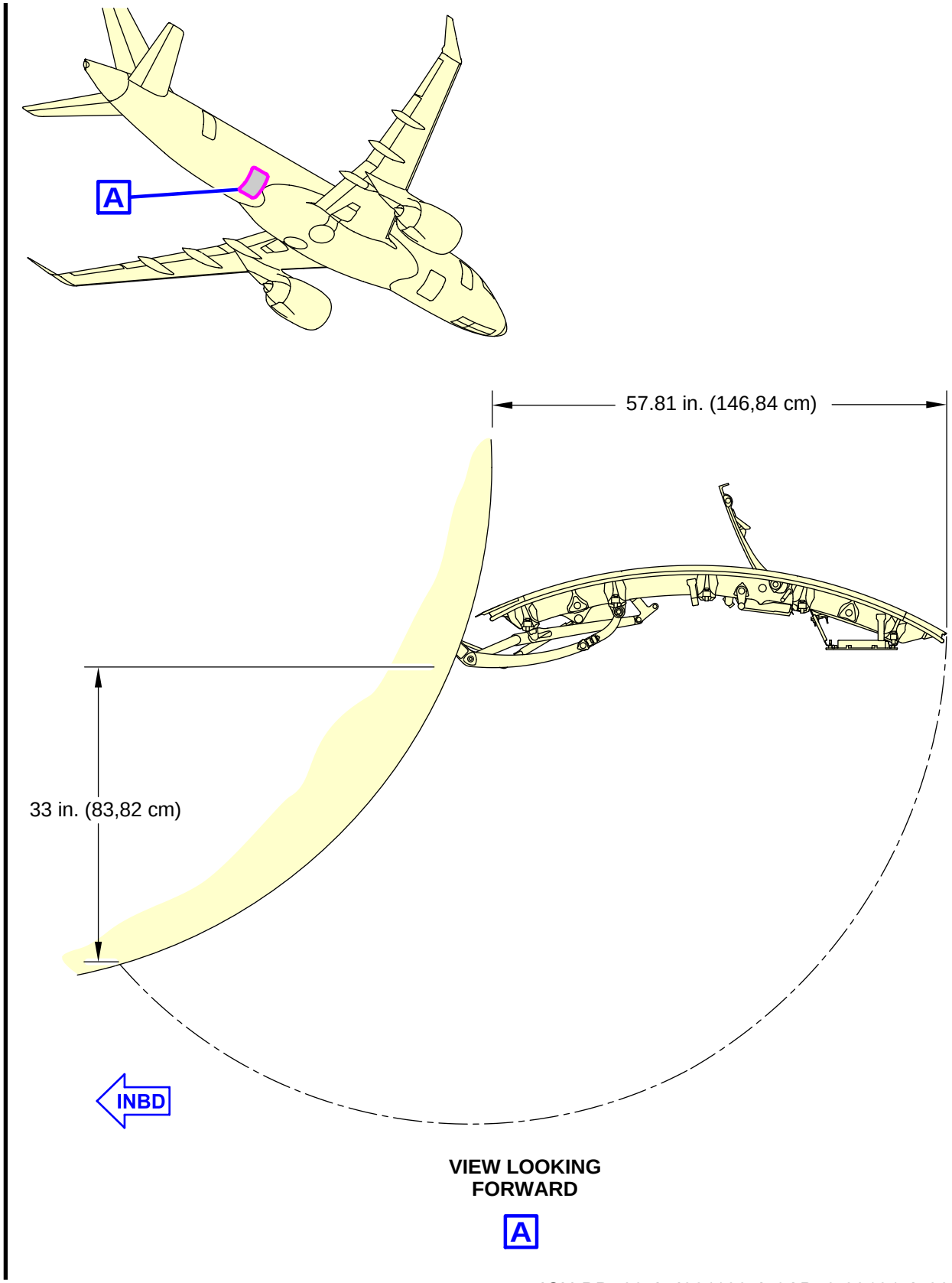

ICN-BD500-A-J061100-A-3AB48-00101-A-003-01

Figure 6 Aft cargo compartment door opening and clearances

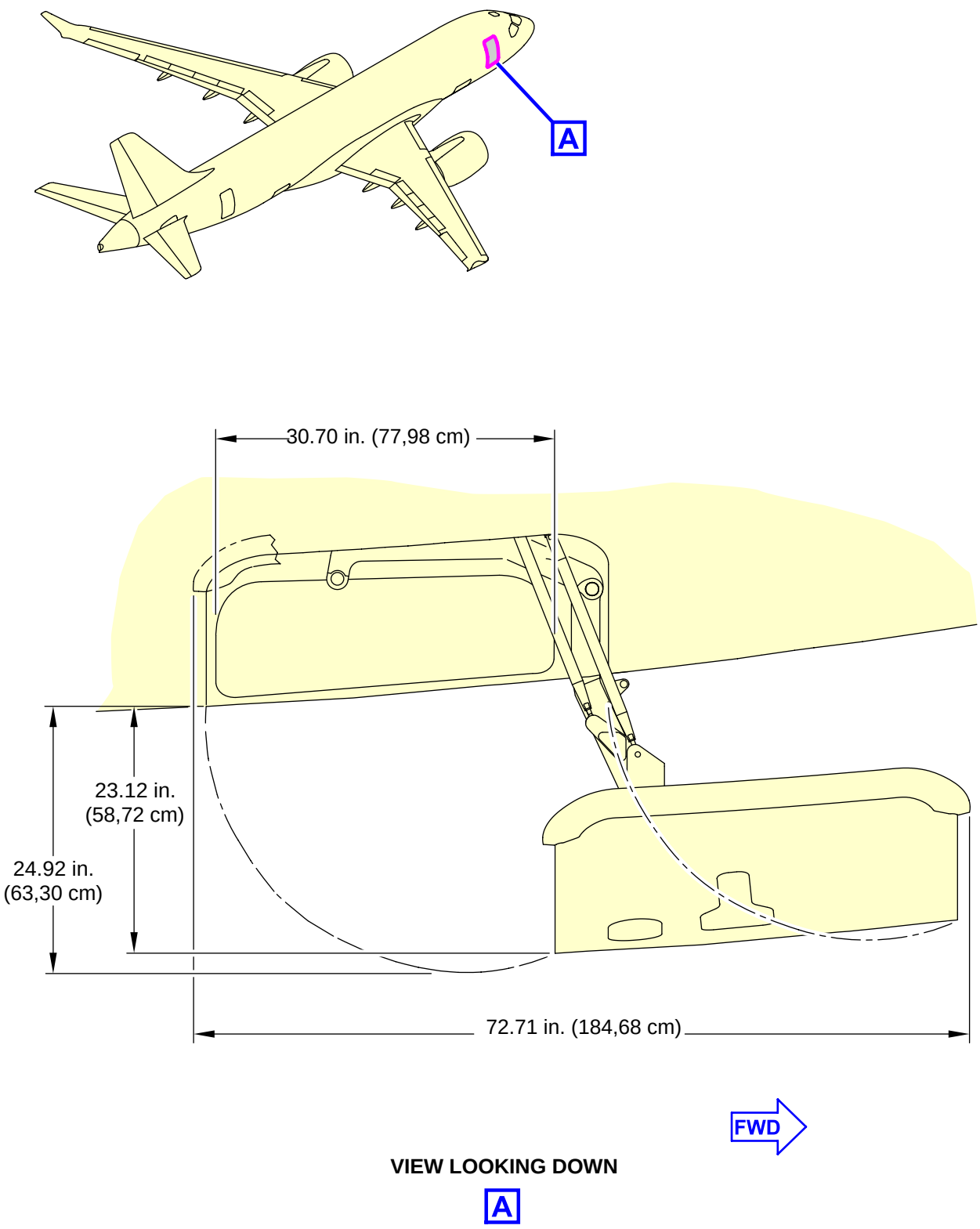

ICN-BD500-A-J061100-A-3AB48-00106-A-003-01

Figure 7 Forward service door opening and clearances

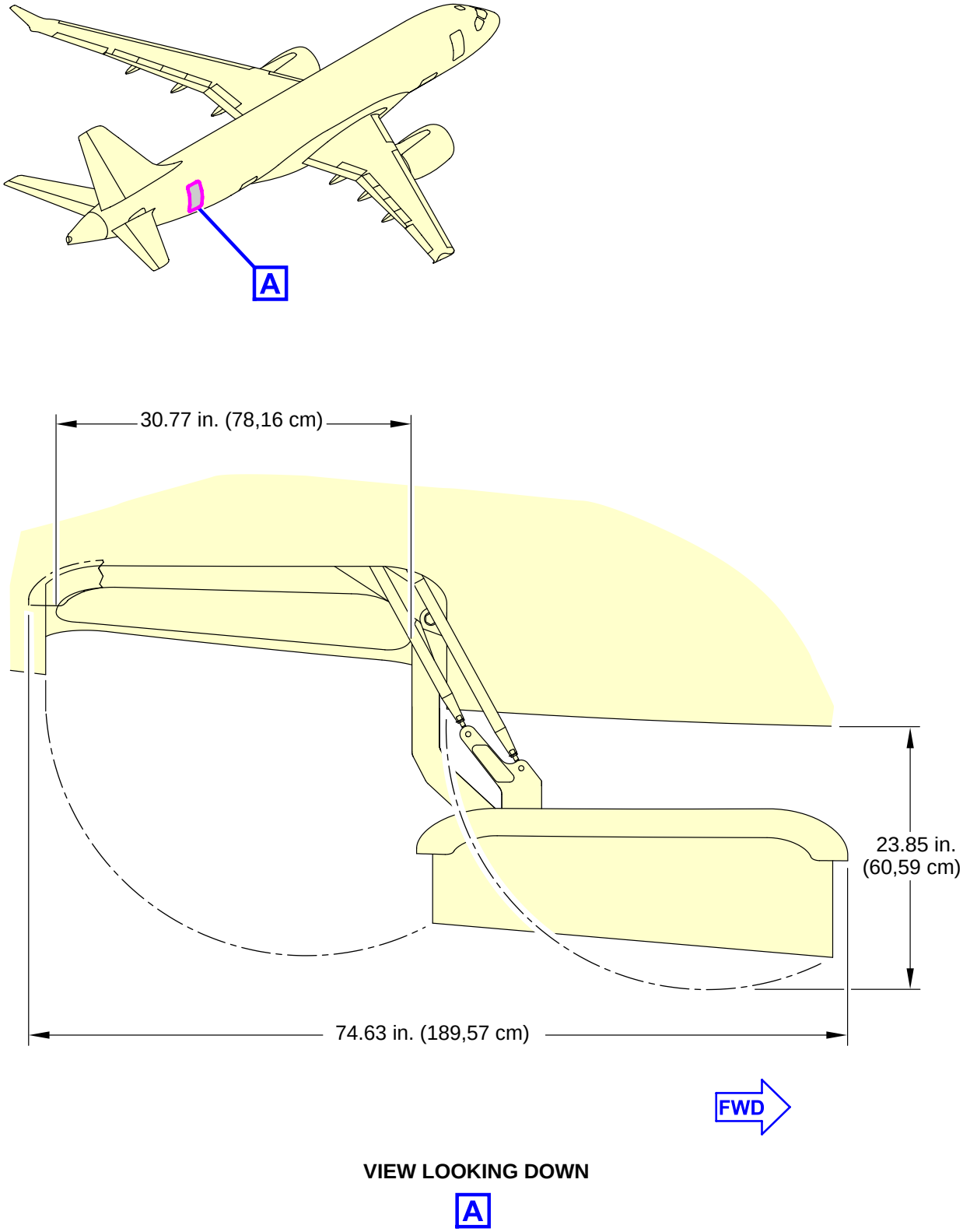

ICN-BD500-A-J061100-A-3AB48-00105-A-003-01

Figure 8 Aft service door opening and clearances

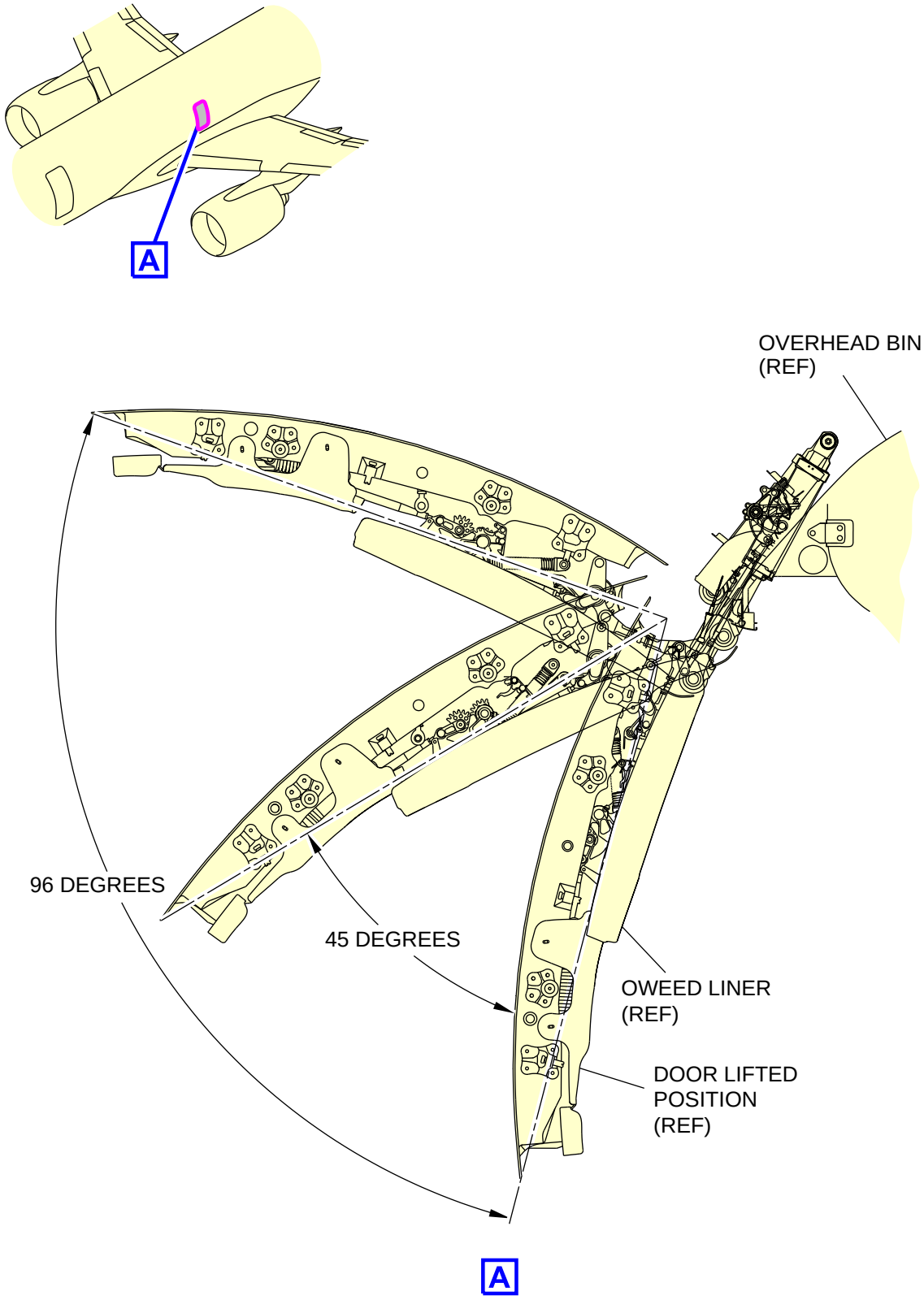

ICN-BD500-A-J061100-A-3AB48-48193-A-001-01

Figure 9 Overwing emergency exit door (OWEED)

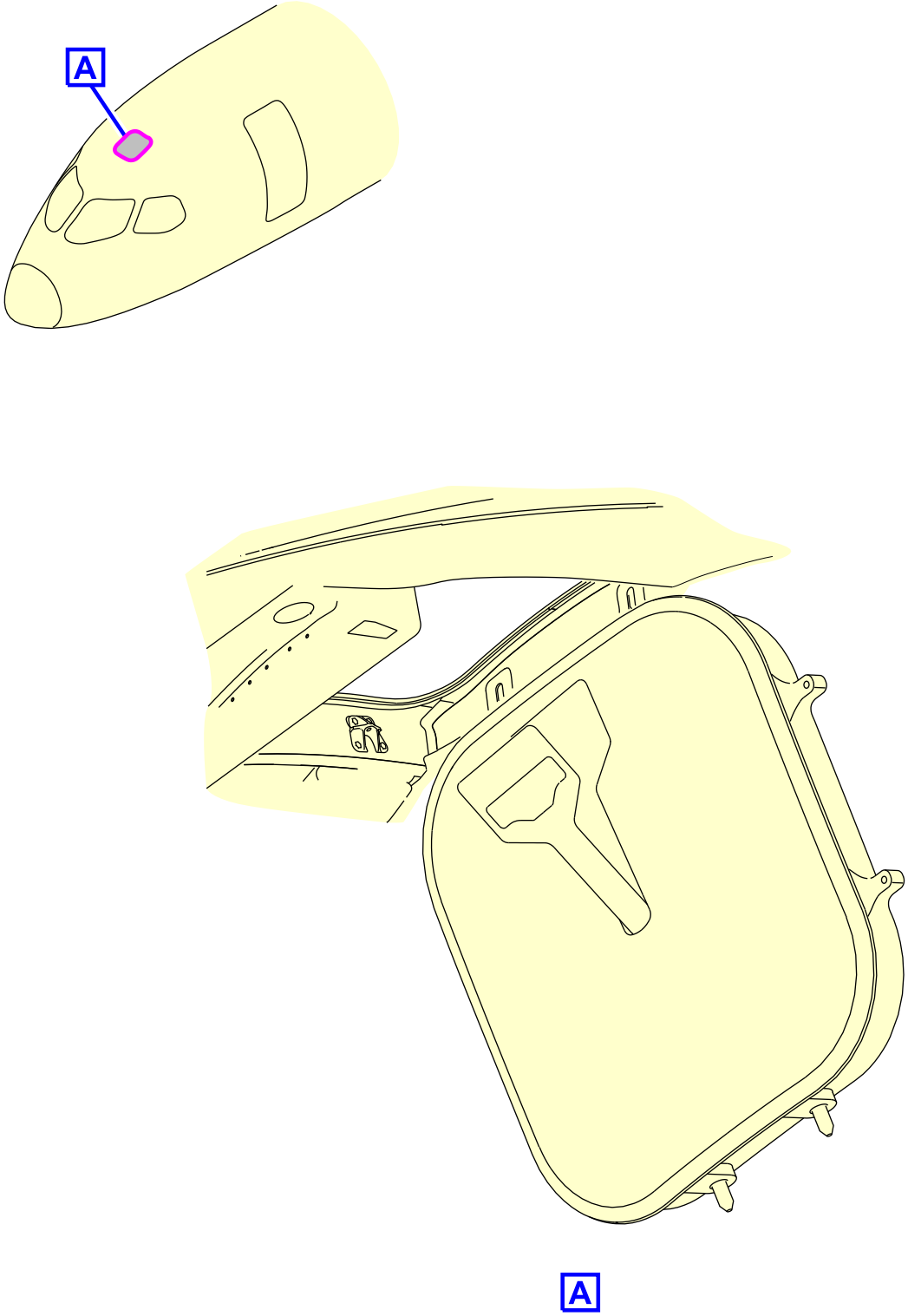

ICN-BD500-A-J061100-A-3AB48-48188-A-001-01

Figure 10 Flight crew emergency escape hatch (FCEE)

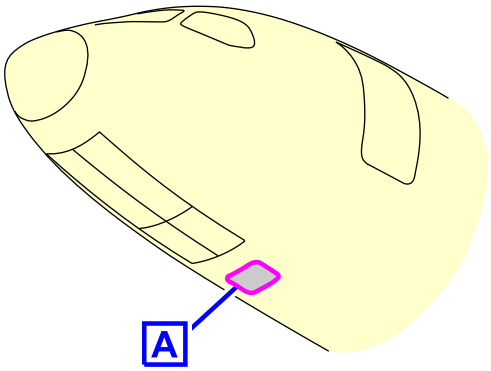

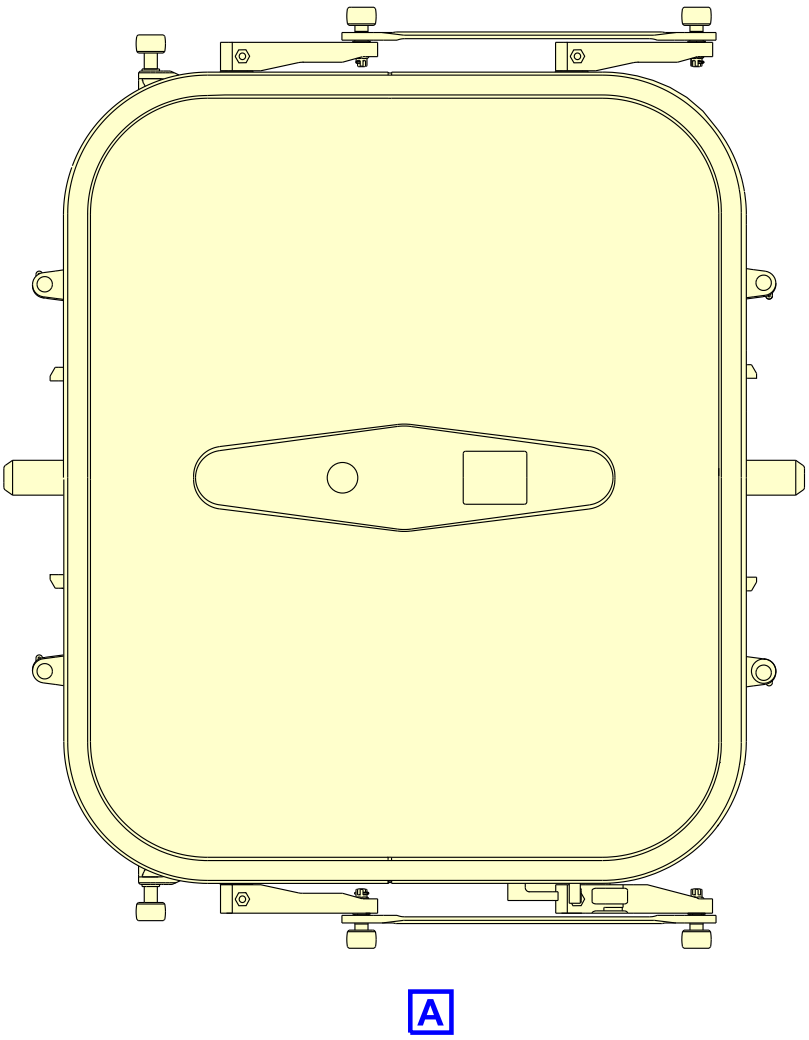

ICN-BD500-A-J061100-A-3AB48-48189-A-001-01

Figure 11 Forward avionics bay door (FAB)

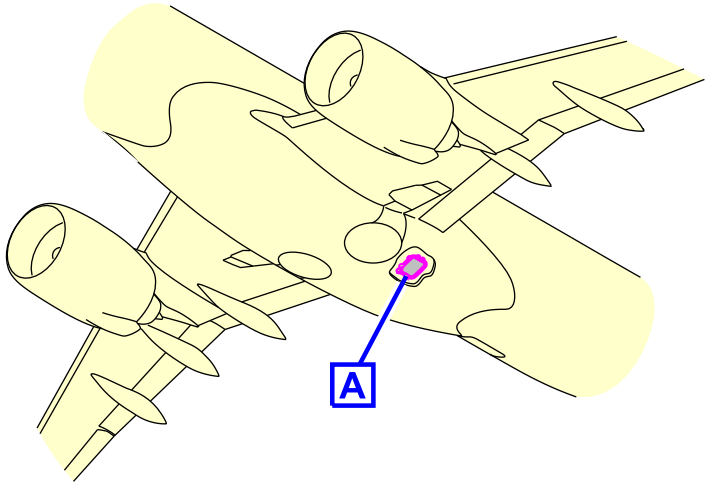

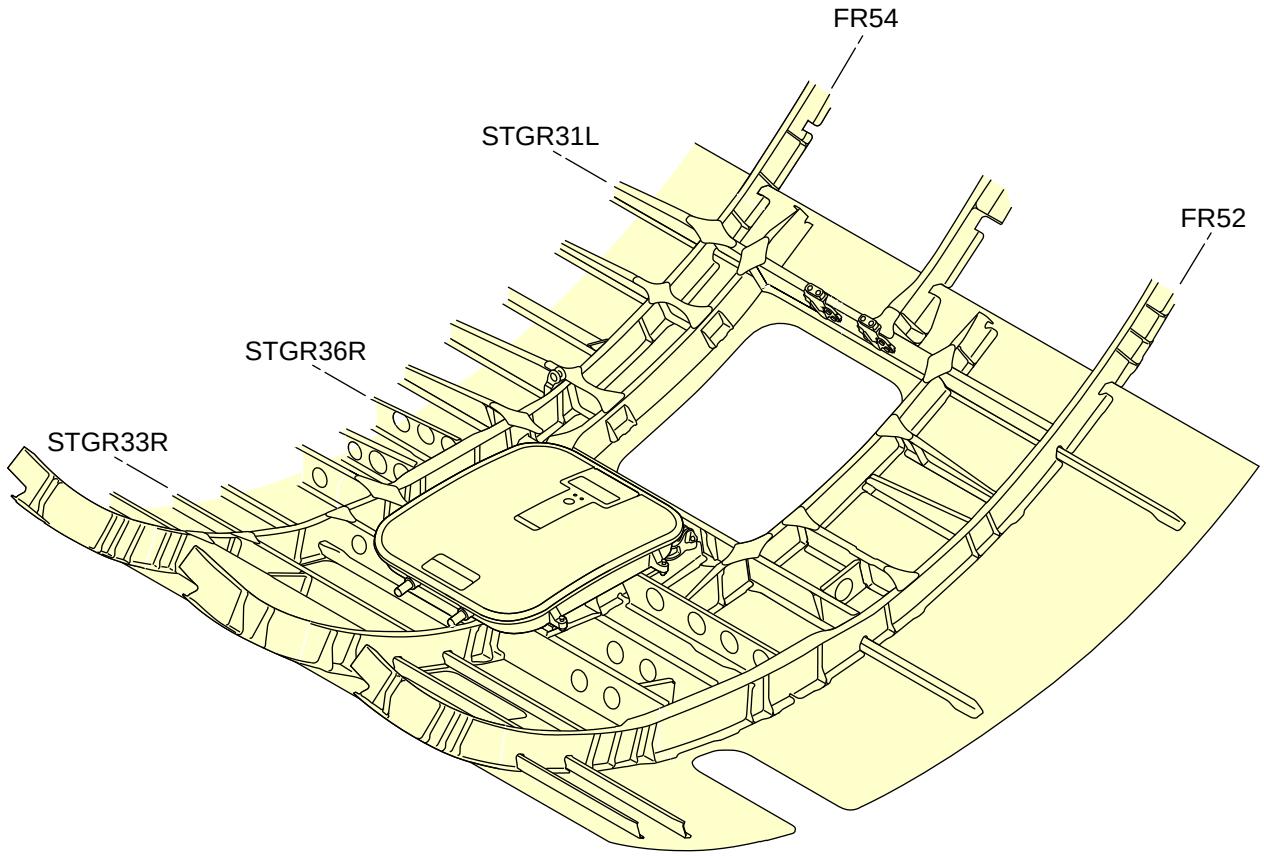

DOOR IN OPEN CONDITION

A

ICN-BD500-A-J061100-A-3AB48-48190-A-001-01

Figure 12 Mid avionics bay door (MAB)

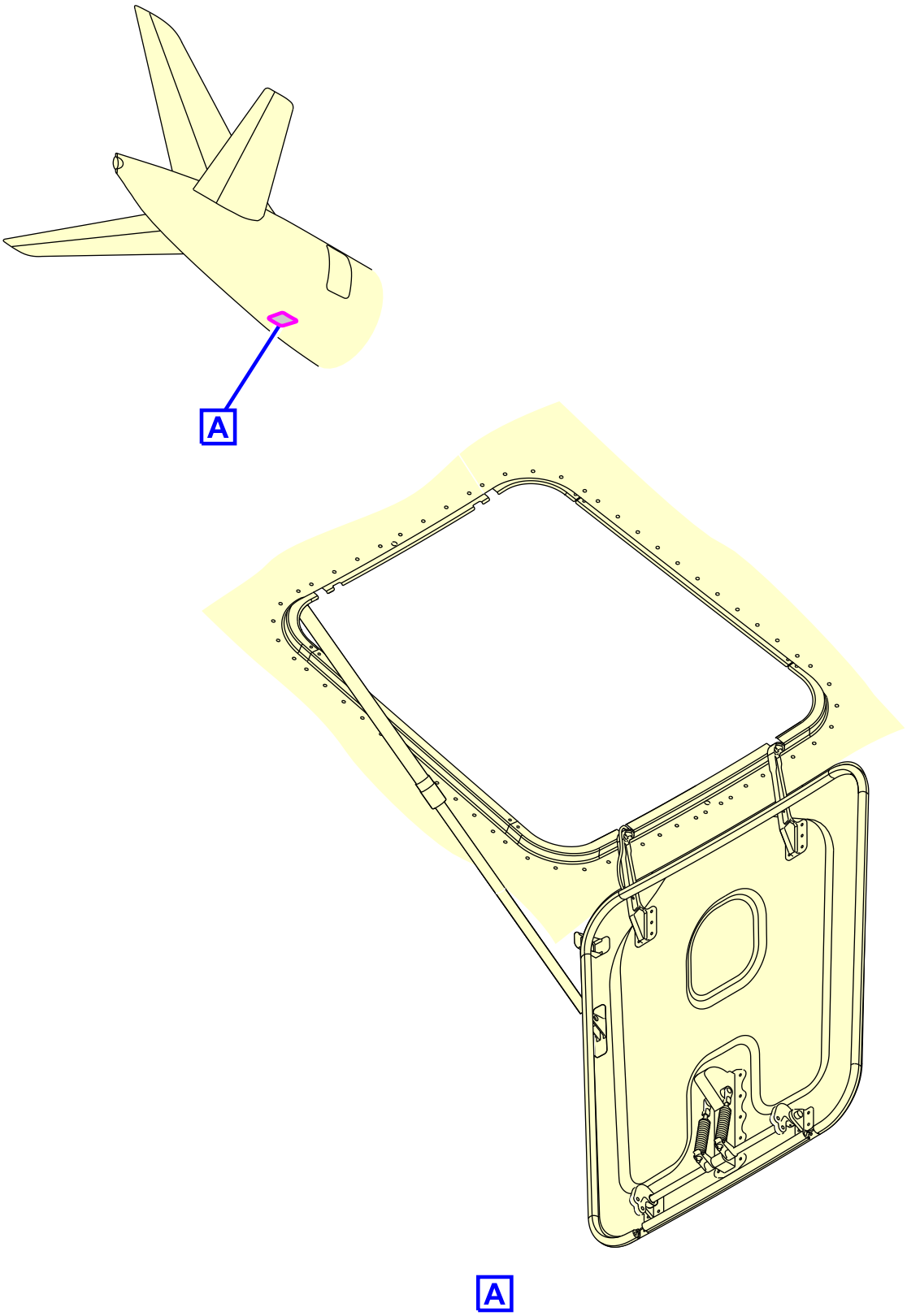

ICN-BD500-A-J061100-A-3AB48-48191-A-001-01

Figure 13 Aft equipment bay door (AEB)

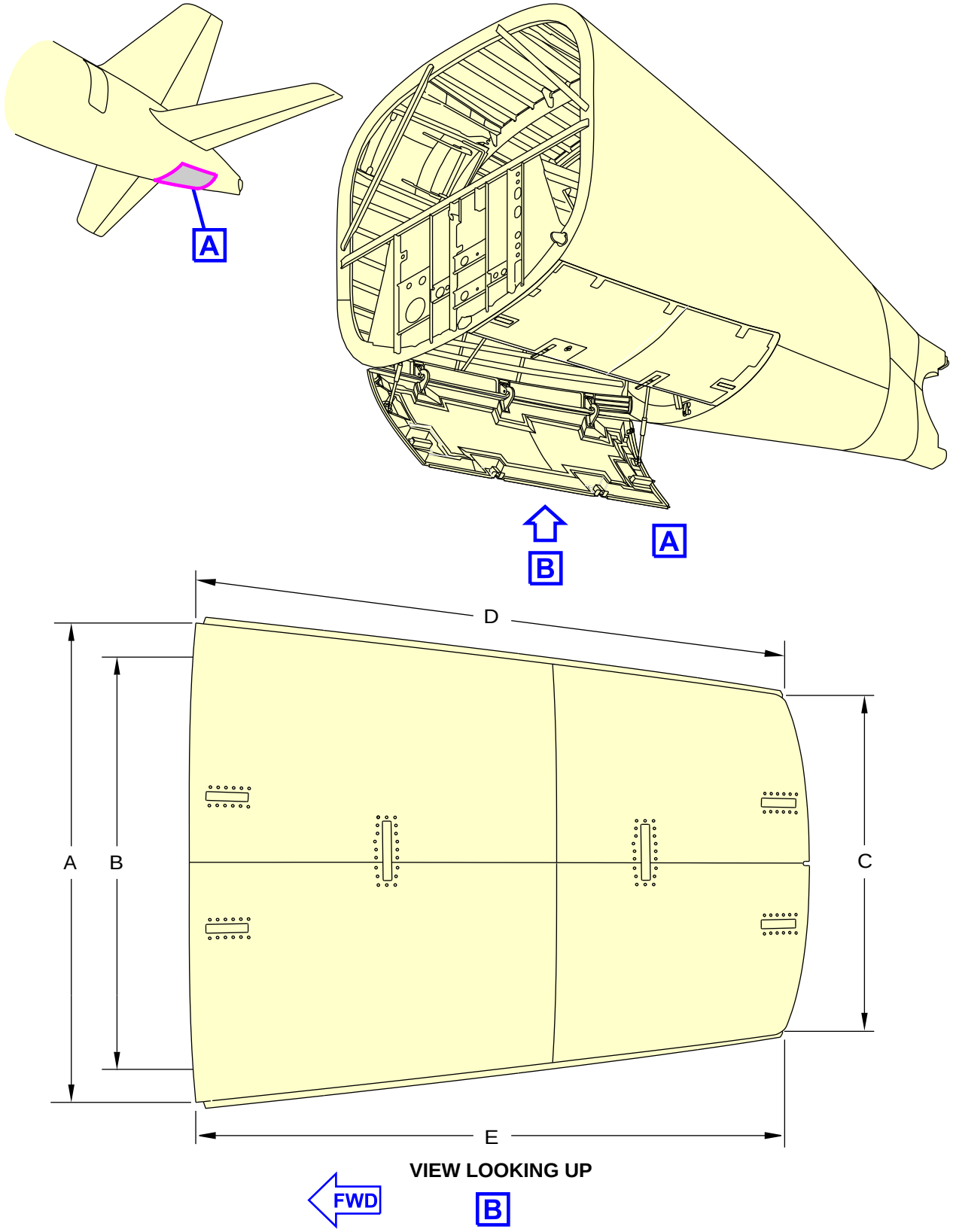

ICN-BD500-A-J061100-A-3AB48-48192-A-001-01

Figure 14 Tailcone door opening

Intentionally left blank

Reference lines - Technical data

Applicability: 50001-54999, 55001-59999

Table of contents

Page

Reference lines - Technical data 1
References 1
Description 1
1 Introduction 1
1.1 Frames (FR) 1
1.2 Wing Stations (WS) 1
1.3 Nacelle Stations (XS) 1
1.4 Empennage Stations 2
1.5 Waterlines (WL) 2
1.6 Buttock Lines (BL) 2

List of tables

Page

1 References 1

References

Table 1 References

Data Module/Technical Publication	Title
BD500-A-J06-20-01-00AAA-030A-A	Frame stations and fuselage stations - Technical data
BD500-A-J06-20-02-00AAA-030A-A	Empennage stations - Technical data
BD500-A-J06-20-03-00AAA-030A-A	Engine/nacelle and pylon stations - Technical data
BD500-A-J06-20-04-00AAA-030A-A	Wing stations - Technical data
BD500-A-J06-20-06-00AAA-030A-A	Buttock lines and water lines - Technical data

Description

1 Introduction

1.1 Frames (FR)

The FR are presented in BD500-A-J06-20-01-00AAA-030A-A.

1.2 Wing Stations (WS)

The WS are presented in BD500-A-J06-20-04-00AAA-030A-A.

1.3 Nacelle Stations (XS)

The XS are presented in BD500-A-J06-20-03-00AAA-030A-A.

1.4 Empennage Stations

The empennage stations are presented in BD500-A-J06-20-02-00AAA-030A-A.

1.5 Waterlines (WL)

The WL are reference lines found at right angles to the buttock line and parallel to the fuselage center line. The waterlines are measured from WL0.00 (found at a point below the static ground line). Refer to BD500-A-J06-20-06-00AAA-030A-A.

1.6 Buttock Lines (BL)

The BL are reference lines found at right angles to the waterline and parallel to the fuselage vertical center line. The buttock lines are measured from the fuselage vertical center line. LBL is the left buttock line and RBL is the right buttock line. Refer to BD500-A-J06-20-06-00AAA-030A-A.

A220

Frame stations and fuselage stations - Technical data

Applicability: 50001-54999, 55001-59999

Table of contents

Page

Frame stations and fuselage stations - Technical data..... 1
References..... 1
Description..... 1
1 Introduction..... 1

List of tables

Page

1 References..... 1
2 Frame and Fuselage station cross-reference to A220-100..... 5
3 Frame and Fuselage station cross-reference to A220-300..... 14

List of figures

Page

1 Frames A220-100..... 2
2 Frames A220-300..... 11

References

Table 1 References

Data Module/Technical Publication	Title
BD500-A-J06-20-03-00AAA-030A-A	Engine/nacelle and pylon stations - Technical data

Description

1 Introduction

The frames represented as FR on Fig. 1 and Fig. 2 are reference planes found at right angles to the fuselage center line.

Refer to Table 2 and Table 3 for frame station and Fuselage Station (FS) cross-reference.

For engine/nacelle and pylon frame station, refer to BD500-A-J06-20-03-00AAA-030A-A.

Note

All datums shown are for reference and approximate.

Applicability: 50001-54999

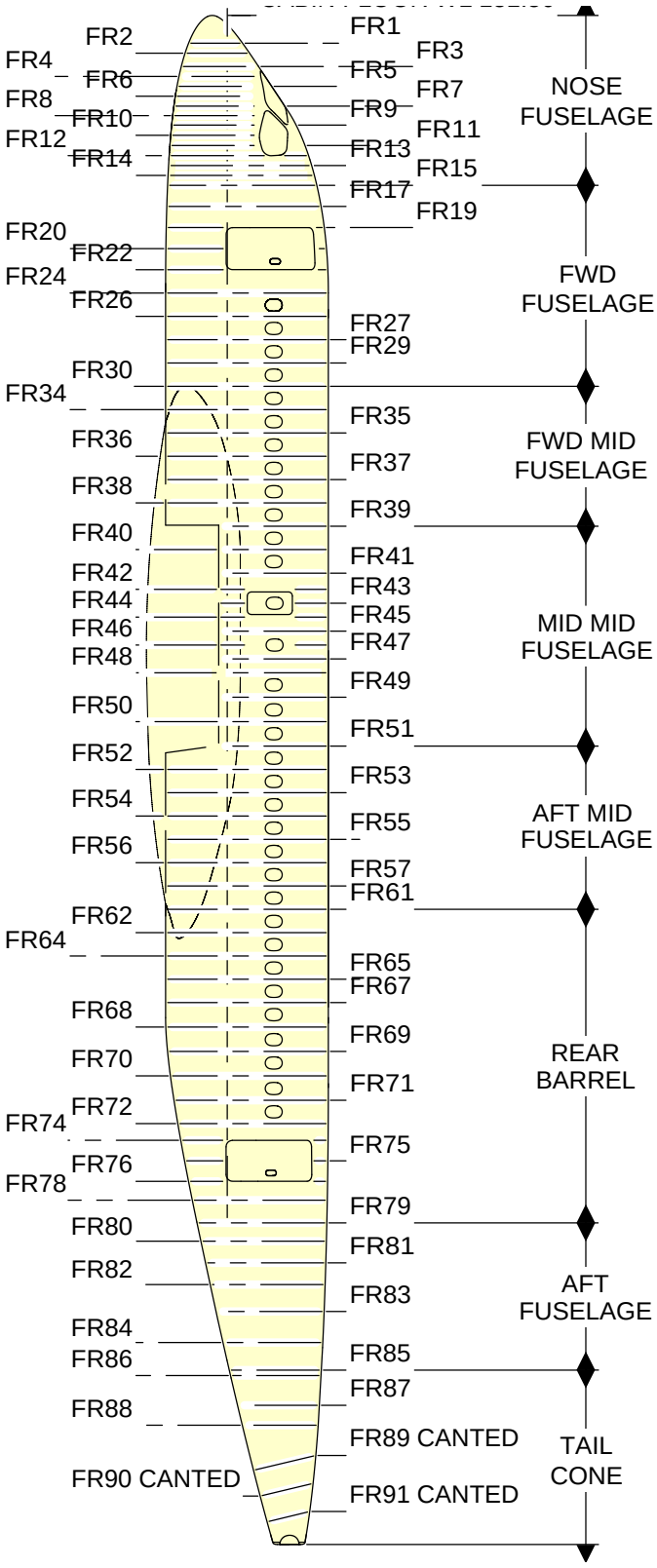

ICN-BD500-A-J062001-A-3AB48-76838-A-001-01

Figure 1 Frames A220-100 - (Sheet 1 of 3)

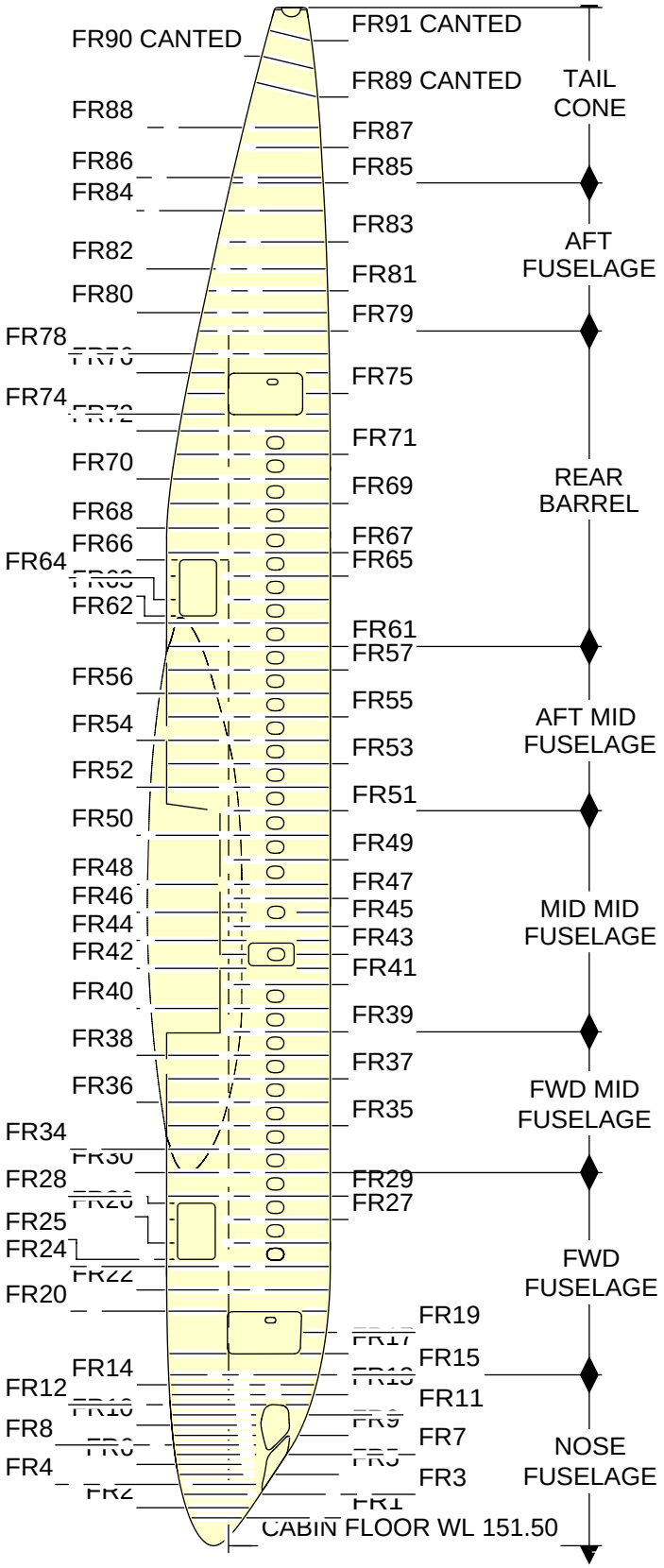

ICN-BD500-A-J062001-A-3AB48-76839-A-001-01

Figure 1 Frames A220-100 - (Sheet 2 of 3)

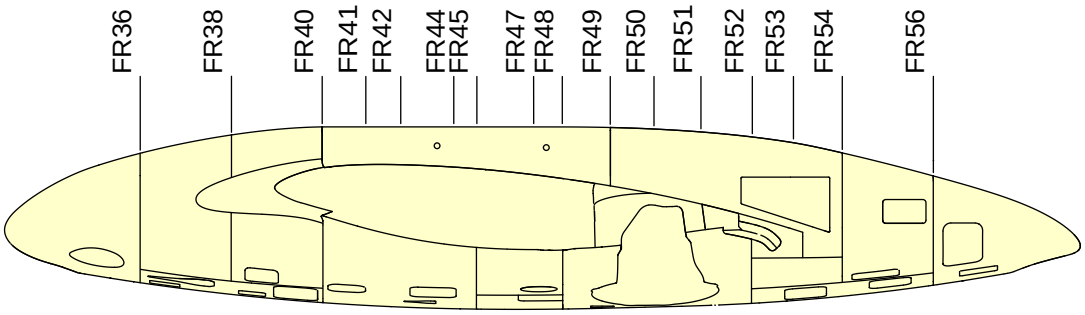

LHS

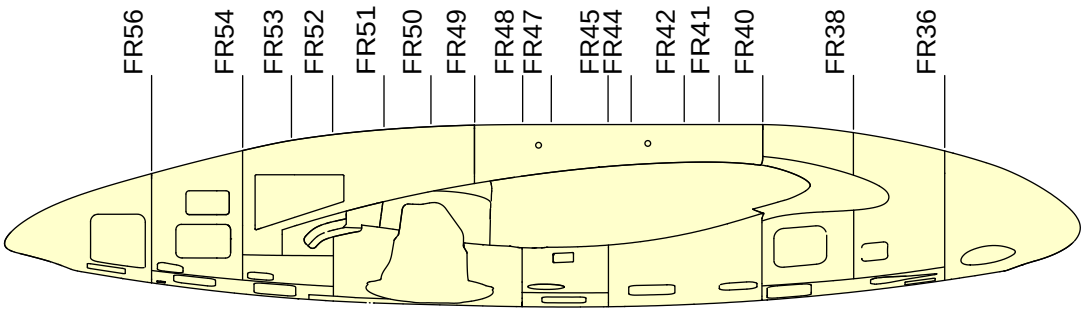

RHS

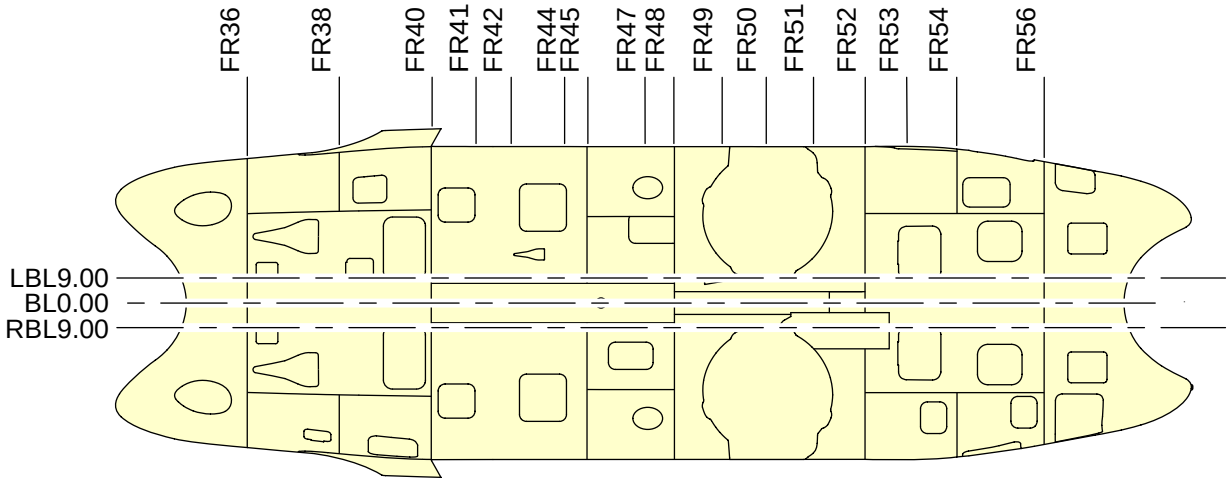

WTBF
VIEW LOOKING UP

ICN-BD500-A-J062001-A-3AB48-76842-A-001-01

Figure 1 Frames A220-100 - (Sheet 3 of 3)

The primary FS datum line (FS 0.0) is 252.0 inches (640.08 cm) forward of the aircraft nose. Refer to Table 2 .

Applicability: 50001-54999

Table 2 Frame and Fuselage station cross-reference to A220-100

Frame station	Fuselage station in. (cm)
FR1	277.000 (703.58)
FR2	286.000 (726.44)
FR3	298.000 (756.92)
FR4	306.917 (779.57)
FR5	315.833 (802.22)
FR6	324.749 (824.86)
FR7	333.666 (847.51)
FR8	342.208 (869.21)
FR9	350.749 (890.90)
FR10	359.939 (914.25)
FR11	369.129 (937.59)
FR12	378.249 (960.75)
FR13	387.166 (983.40)

Frame station	Fuselage station in. (cm)
FR14	396.083 (1006.05)
FR15	405.000 (1028.70)
FR17	424.000 (1076.96)
FR19	443.000 (1125.22)
FR20	462.000 (1173.48)
FR22	481.000 (1221.74)
FR24	502.000 (1275.08)
FR25	508.000 (1290.32)
FR26	523.000 (1328.42)
FR27	544.000 (1381.76)
FR28	559.000 (1419.86)
FR29	565.000 (1435.10)
FR30	586.000 (1488.44)
FR34	607.000 (1541.78)
FR35	628.000 (1595.12)

Frame station	Fuselage station in. (cm)
FR36	649.000 (1648.46)
FR37	670.000 (1701.80)
FR38	691.000 (1755.14)
FR39	712.000 (1808.48)
FR40	733.000 (1861.82)
FR41	754.300 (1915.92)
FR42	768.850 (1952.88)
FR43	781.350 (1984.63)
FR44	793.850 (2016.38)
FR45	806.500 (2048.51)
FR46	819.000 (2080.26)
FR47	831.500 (2112.01)
FR48	844.000 (2143.76)
FR49	866.000 (2199.64)
FR50	888.000 (2255.52)

Frame station	Fuselage station in. (cm)
FR51	910.000 (2311.4)
FR52	931.000 (2364.74)
FR52A	945.000 (2400.30)
FR53	952.000 (2418.08)
FR53A	967.000 (2456.18)
FR54	973.000 (2471.42)
FR55	994.000 (2524.76)
FR56	1015.000 (2578.10)
FR57	1036.000 (2631.44)
FR61	1057.000 (2684.78)
FR62	1078.000 (2738.12)
FR63	1084.000 (2753.36)
FR64	1099.000 (2791.46)
FR65	1120.000 (2844.8)
FR66	1135.000 (2882.90)

Frame station	Fuselage station in. (cm)
FR67	1141.000 (2898.14)
FR68	1163.000 (2954.02)
FR69	1185.000 (3009.90)
FR70	1207.000 (3065.78)
FR71	1229.000 (3121.66)
FR72	1250.000 (3175.00)
FR74	1265.000 (3213.10)
FR75	1283.500 (3260.09)
FR76	1302.000 (3307.08)
FR78	1319.000 (3350.26)
FR79	1339.400 (3402.08)
FR80	1355.860 (3443.88)
FR81	1375.410 (3493.54)
FR82	1394.970 (3543.22)
FR83	1419.170 (3604.69)

Frame station	Fuselage station in. (cm)
FR84	1445.460 (3671.47)
FR85	1472.000 (3738.88)
FR86	1477.000 (3751.58)
FR87	1503.676 (3819.34)
FR88	1521.606 (3864.87)

Applicability: 55001-59999

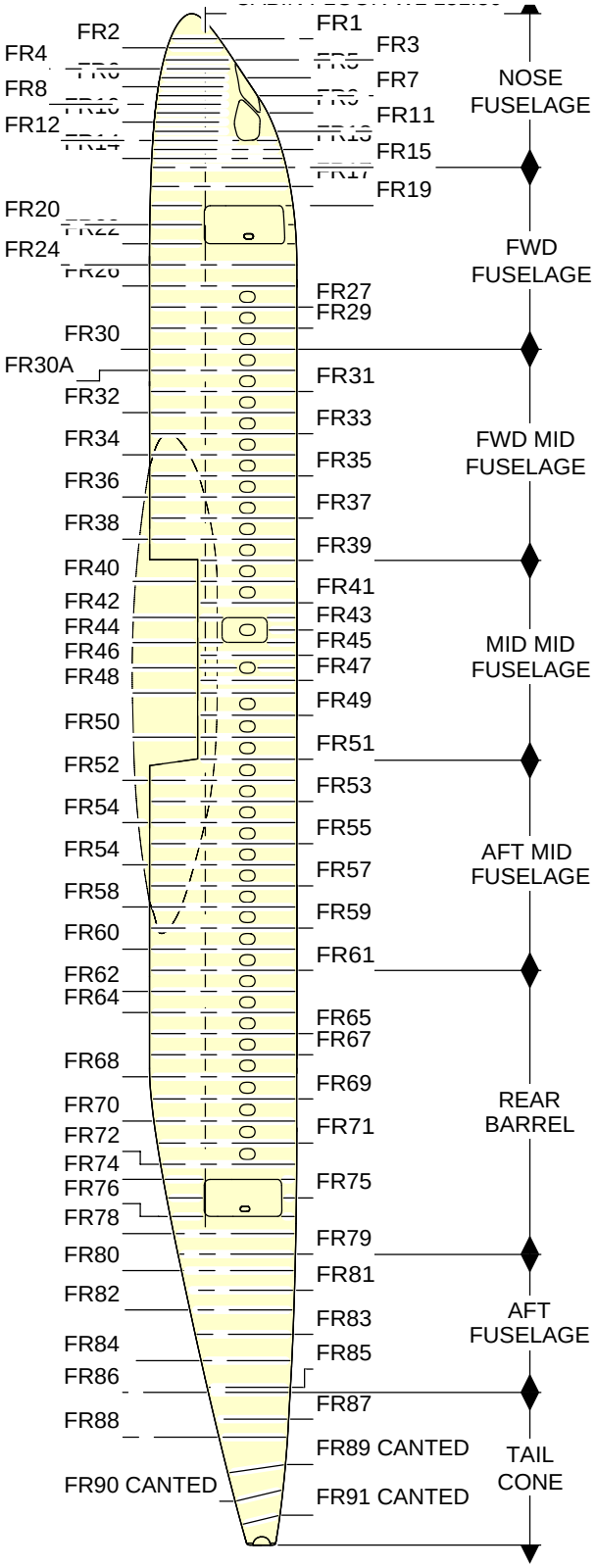

ICN-BD500-A-J062001-A-3AB48-76840-A-001-01

Figure 2 Frames A220-300 - (Sheet 1 of 3)

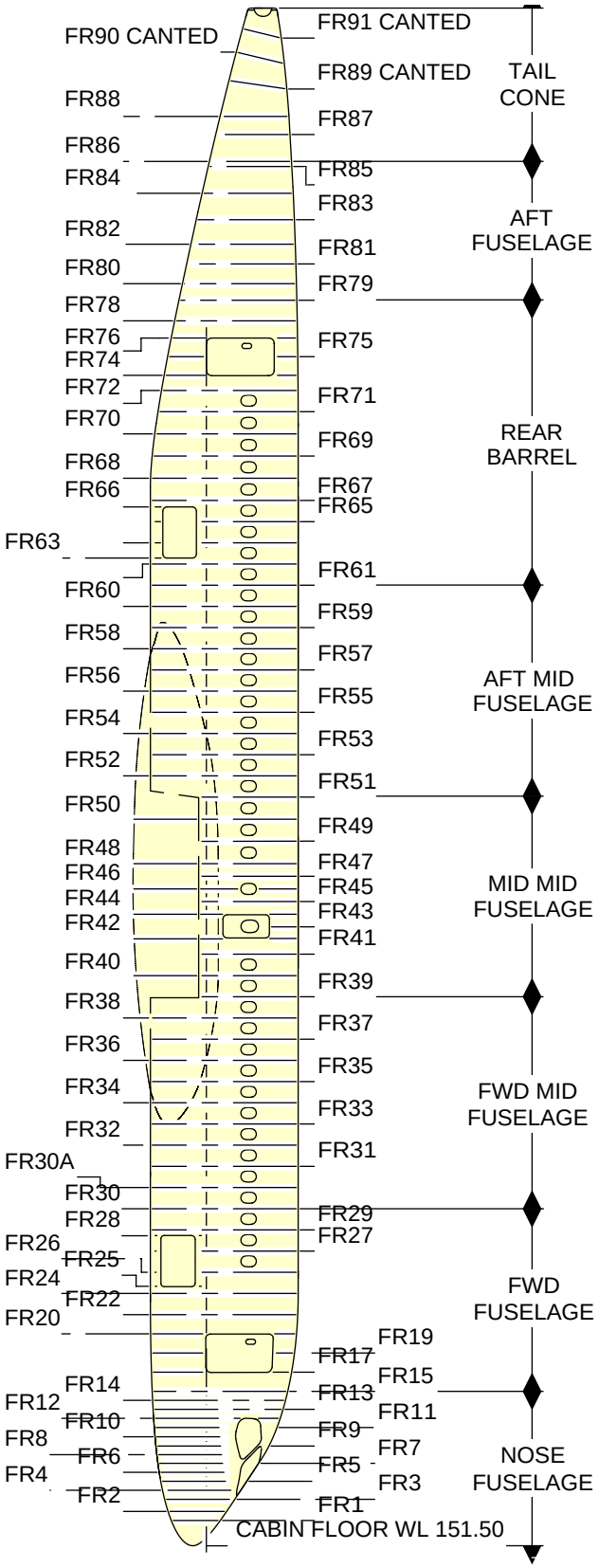

ICN-BD500-A-J062001-A-3AB48-76841-A-001-01

Figure 2 Frames A220-300 - (Sheet 2 of 3)

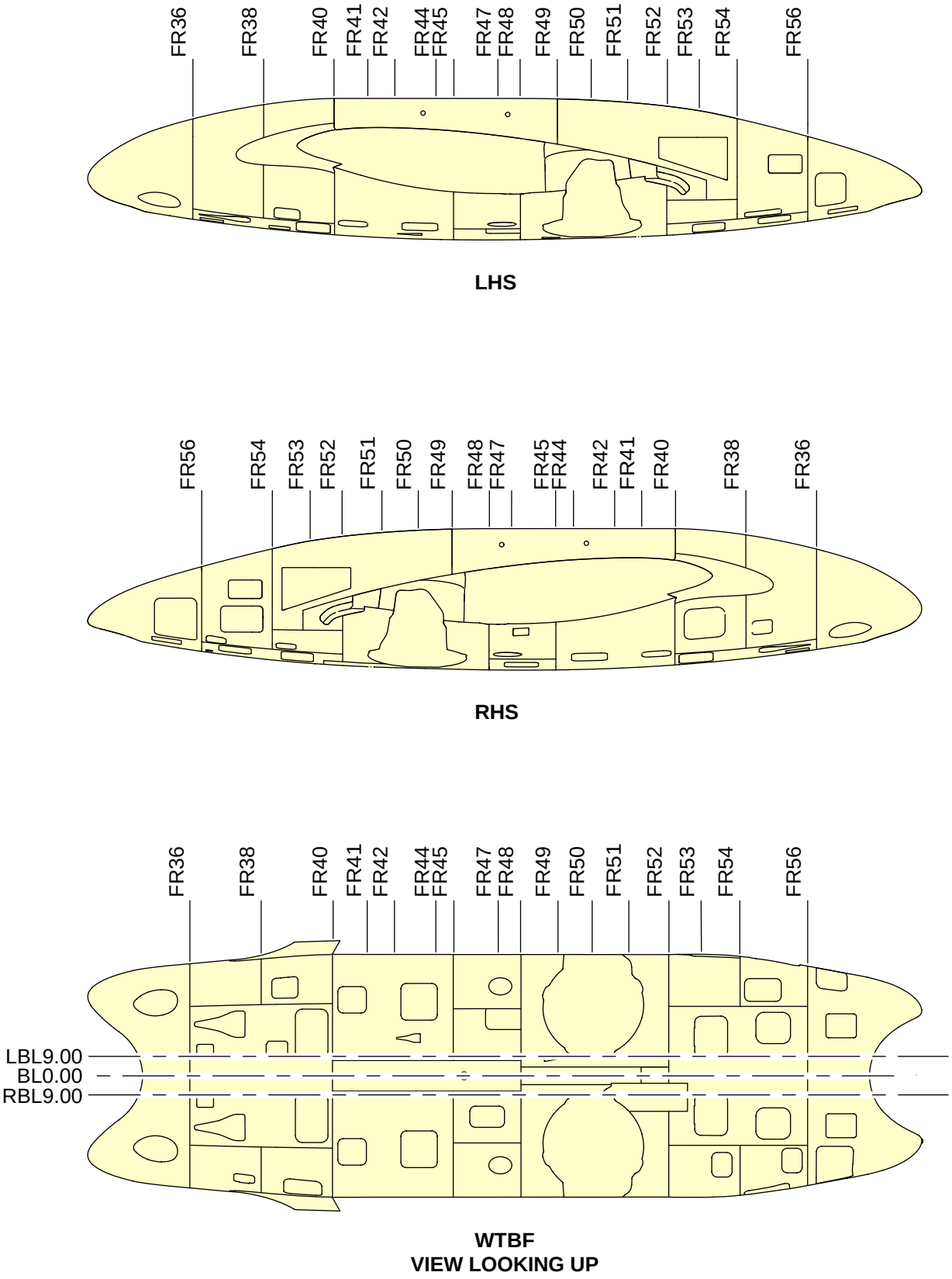

ICN-BD500-A-J062001-A-3AB48-76842-A-001-01

Figure 2 Frames A220-300 - (Sheet 3 of 3)

The primary FS datum line (FS 0.0) is 168.0 inches (426.72 cm) forward of the aircraft nose. Refer to Table 3 .

Applicability: 55001-59999

Table 3 Frame and Fuselage station cross-reference to A220-300

Frame station	Fuselage station in. (cm)
FR1	193.000 (490.22)
FR2	202.000 (513.08)
FR3	214.000 (543.56)
FR4	222.917 (566.21)
FR5	231.833 (588.56)
FR6	240.749 (611.50)
FR7	249.666 (634.15)
FR8	258.208 (655.85)
FR9	266.749 (677.54)
FR10	275.939 (700.89)
FR11	285.129 (724.23)
FR12	294.249 (747.39)
FR13	303.166 (770.04)

Frame station	Fuselage station in. (cm)
FR14	312.083 (792.69)
FR15	321.000 (815.34)
FR17	340.000 (863.60)
FR19	359.000 (911.86)
FR20	378.000 (960.12)
FR22	397.000 (1008.38)
FR24	418.000 (1061.72)
FR25	424.000 (1076.96)
FR26	439.000 (1115.06)
FR27	460.000 (1168.40)
FR28	475.000 (1206.50)
FR29	481.000 (1221.74)
FR30	502.000 (1275.08)
FR30A	523.000 (1328.42)
FR31	544.000 (1381.76)

Frame station	Fuselage station in. (cm)
FR32	565.000 (1435.10)
FR33	586.000 (1488.44)
FR34	607.000 (1541.78)
FR35	628.000 (1595.12)
FR36	649.000 (1648.46)
FR37	670.000 (1701.80)
FR38	691.000 (1755.14)
FR39	712.000 (1808.48)
FR40	733.000 (1861.82)
FR41	754.300 (1915.92)
FR42	768.850 (1952.88)
FR43	781.350 (1984.63)
FR44	793.850 (2016.38)
FR45	806.500 (2048.51)
FR46	819.000 (2080.26)

Frame station	Fuselage station in. (cm)
FR47	831.500 (2112.01)
FR48	844.000 (2143.76)
FR49	866.000 (2199.64)
FR50	888.000 (2255.52)
FR51	910.000 (2311.40)
FR52	931.000 (2364.74)
FR52A	945.000 (2400.30)
FR53	952.000 (2418.08)
FR53A	967.000 (2456.18)
FR54	973.000 (2471.42)
FR55	994.000 (2524.76)
FR56	1015.000 (2578.10)
FR57	1036.000 (2631.44)
FR58	1057.000 (2684.78)
FR59	1078.000 (2738.12)

Frame station	Fuselage station in. (cm)
FR60	1099.000 (2791.46)
FR61	1120.000 (2844.80)
FR62	1141.000 (2898.14)
FR63	1147.000 (2913.38)
FR64	1162.000 (2951.48)
FR65	1183.000 (3004.82)
FR66	1198.000 (3042.92)
FR67	1204.000 (3058.16)
FR68	1226.000 (3114.04)
FR69	1248.000 (3169.92)
FR70	1270.000 (3225.80)
FR71	1292.000 (3281.68)
FR72	1313.000 (3335.02)
FR74	1328.000 (3373.12)
FR75	1346.500 (3420.11)

Frame station	Fuselage station in. (cm)
FR76	1365.000 (3467.10)
FR78	1382.000 (3510.28)
FR79	1402.400 (3562.10)
FR80	1418.860 (3603.90)
FR81	1438.410 (3653.56)
FR82	1457.970 (3703.24)
FR83	1482.170 (3764.71)
FR84	1508.460 (3831.49)
FR85	1535.000 (3898.90)
FR86	1540.000 (3911.60)
FR87	1567.506 (3981.47)
FR88	1584.606 (4024.90)

Intentionally left blank

Empennage stations - Technical data

Applicability: 50001-54999, 55001-59999

Table of contents

Page

Empennage stations - Technical data 1
References 1
Description 1
1 Introduction 1
1.1 Vertical Empennage Stations (ZV) 1
1.2 Rudder Tail Stations (ZVS) 2
1.3 Horizontal Empennage Stations (HSS) 2
1.4 Elevator reference lines 2

List of tables

Page

1 References 1

List of figures

Page

1 Vertical empennage stations 3
2 Rudder tail stations 4
3 Horizontal empennage stations 5
4 Elevator reference lines 10

References

Table 1 References

Data Module/Technical Publication	Title
None	

Description

1 Introduction

1.1 Vertical Empennage Stations (ZV)

The vertical empennage stations are reference planes found at right angles to the center line of the vertical stabilizer rear spar.

The vertical empennage stations are measured from a point that aligns with WL102.50 and the datum line of the vertical stabilizer rear spar.

Each vertical empennage station corresponds to a rib datum

The vertical empennage stations are defined at the intersection of rib datum and front spar datum at the vertical stabilizer reference plan (Refer to Fig. 1).

1.2 Rudder Tail Stations (ZVS)

The rudder tail stations are reference plans perpendicular to the projection of the rudder hinge line on plane Y=0. The plans are measured from the intersection of the projection of the rudder hinge line with the fuselage centerline, where ZVS=0.

Each vertical tail station corresponds to a rib datum. (Refer to Fig. 2).

1.3 Horizontal Empennage Stations (HSS)

The horizontal empennage stations are reference planes found at right angles to the center line of the horizontal stabilizer rear spar. The horizontal empennage stations are measured from the horizontal stabilizer center line.

Each horizontal empennage station corresponds to a rib datum.

The horizontal empennage stations are defined at the intersection of rib datum and front spar datum at the horizontal stabilizer reference plan (Refer to Fig. 3).

1.4 Elevator reference lines

For the elevator, instead of stations, rib datum reference lines are used as reference lines (Refer to Fig. 4).

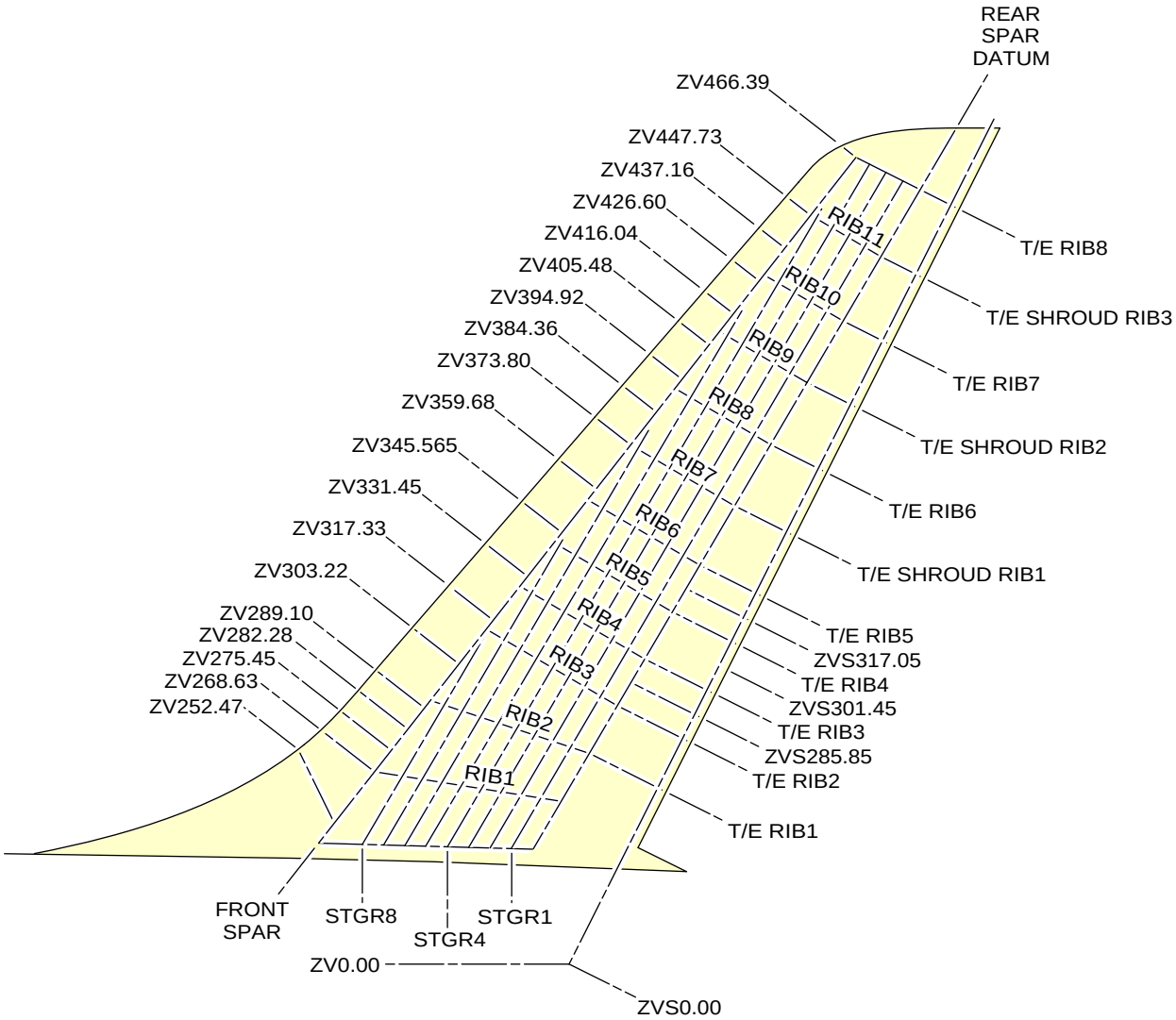

ICN-BD500-A-J062002-A-3AB48-01101-A-001-01

Figure 1 Vertical empennage stations

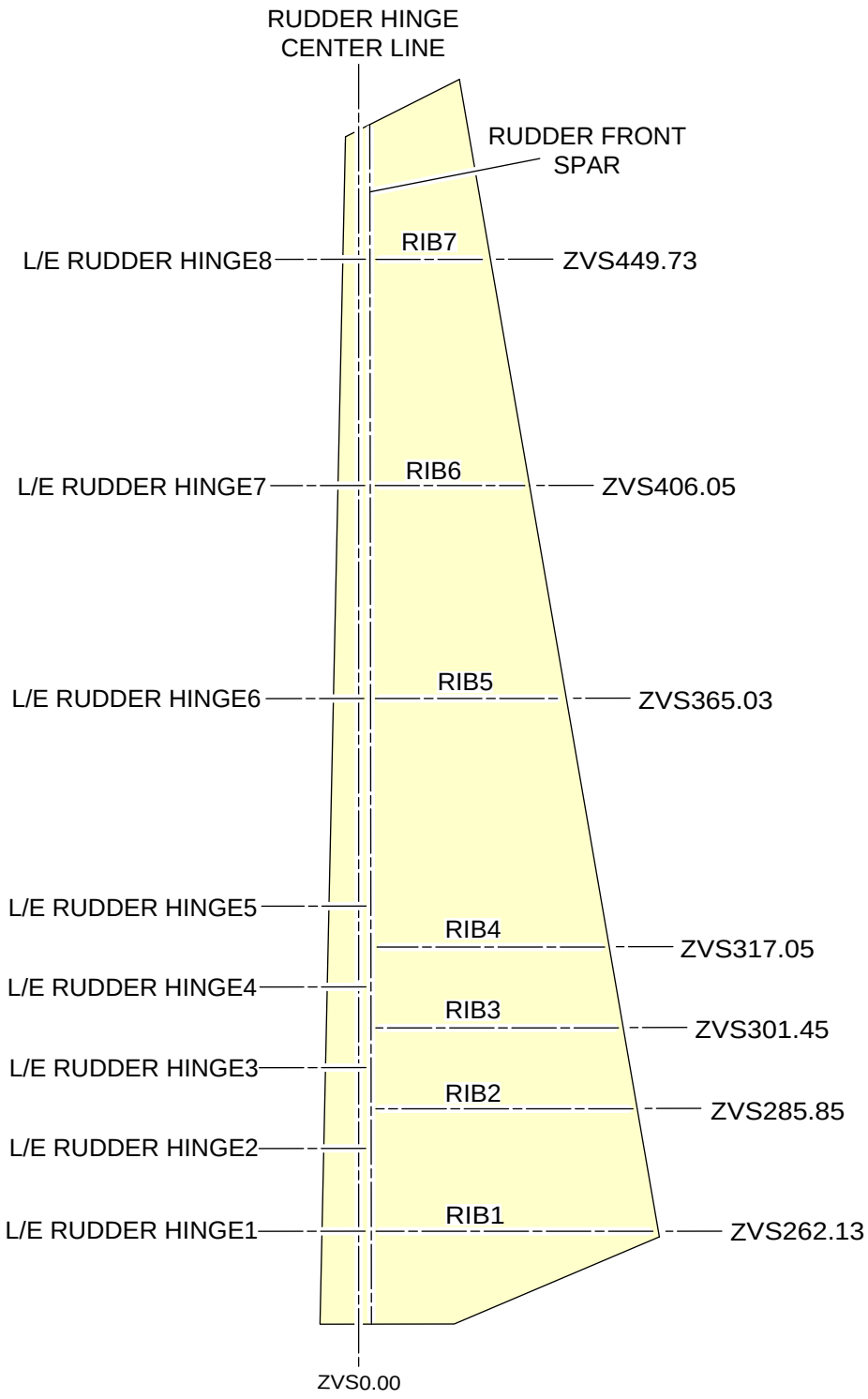

ICN-BD500-A-J062002-A-3AB48-01102-A-001-01

Figure 2 Rudder tail stations

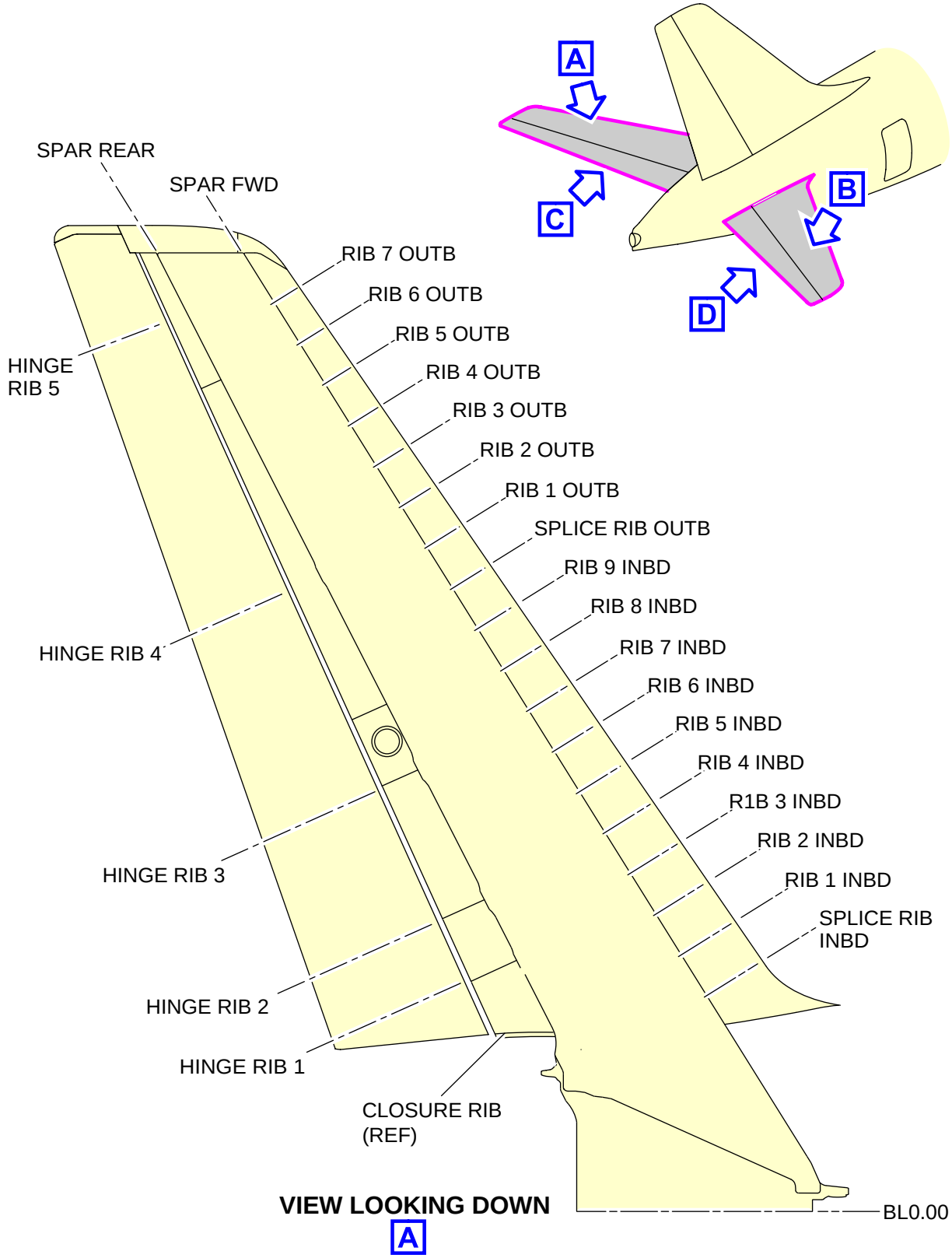

ICN-BD500-A-J062002-A-3AB48-76794-A-001-01

Figure 3 Horizontal empennage stations - (Sheet 1 of 5)

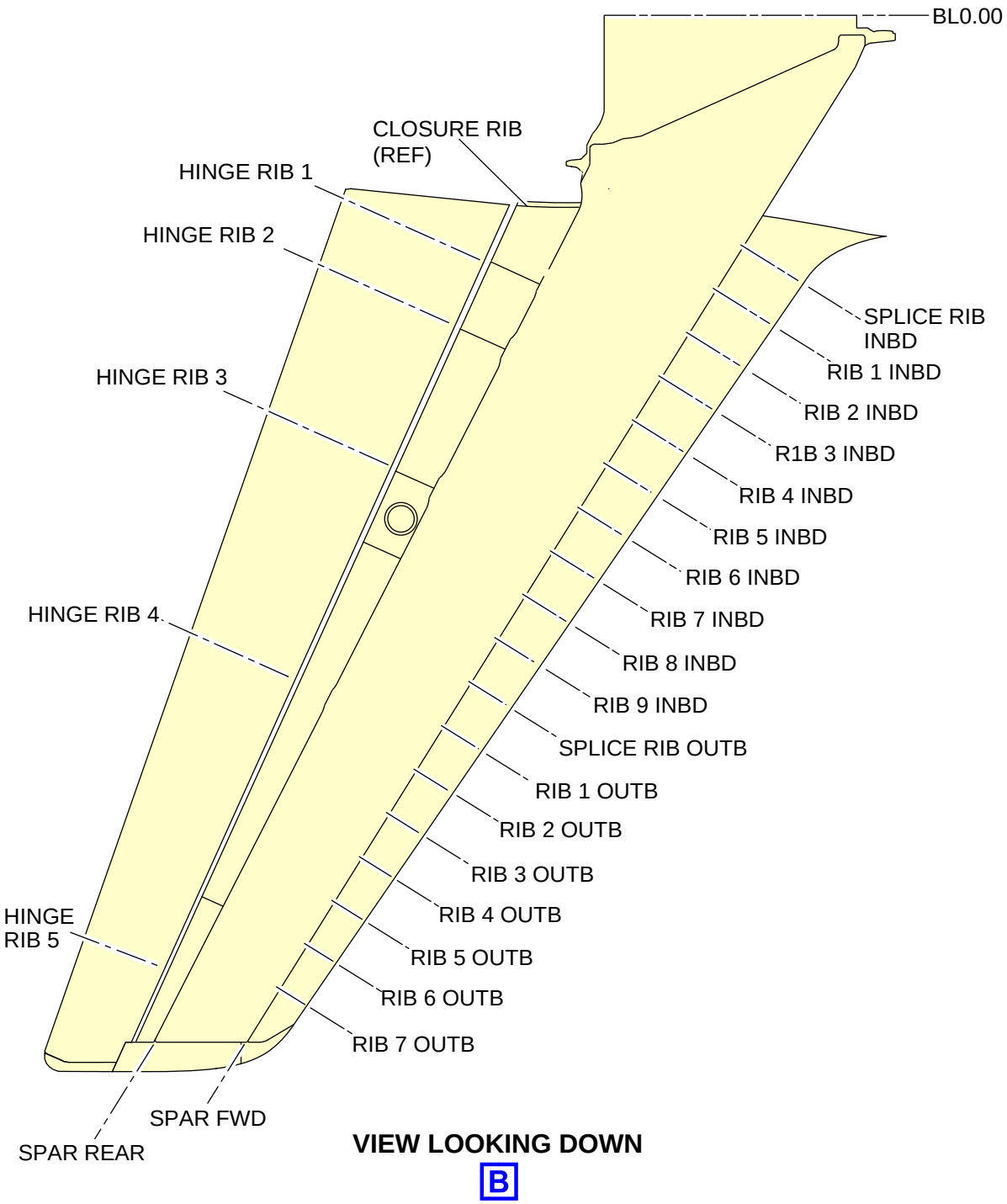

ICN-BD500-A-J062002-A-3AB48-76795-A-001-01

Figure 3 Horizontal empennage stations - (Sheet 2 of 5)

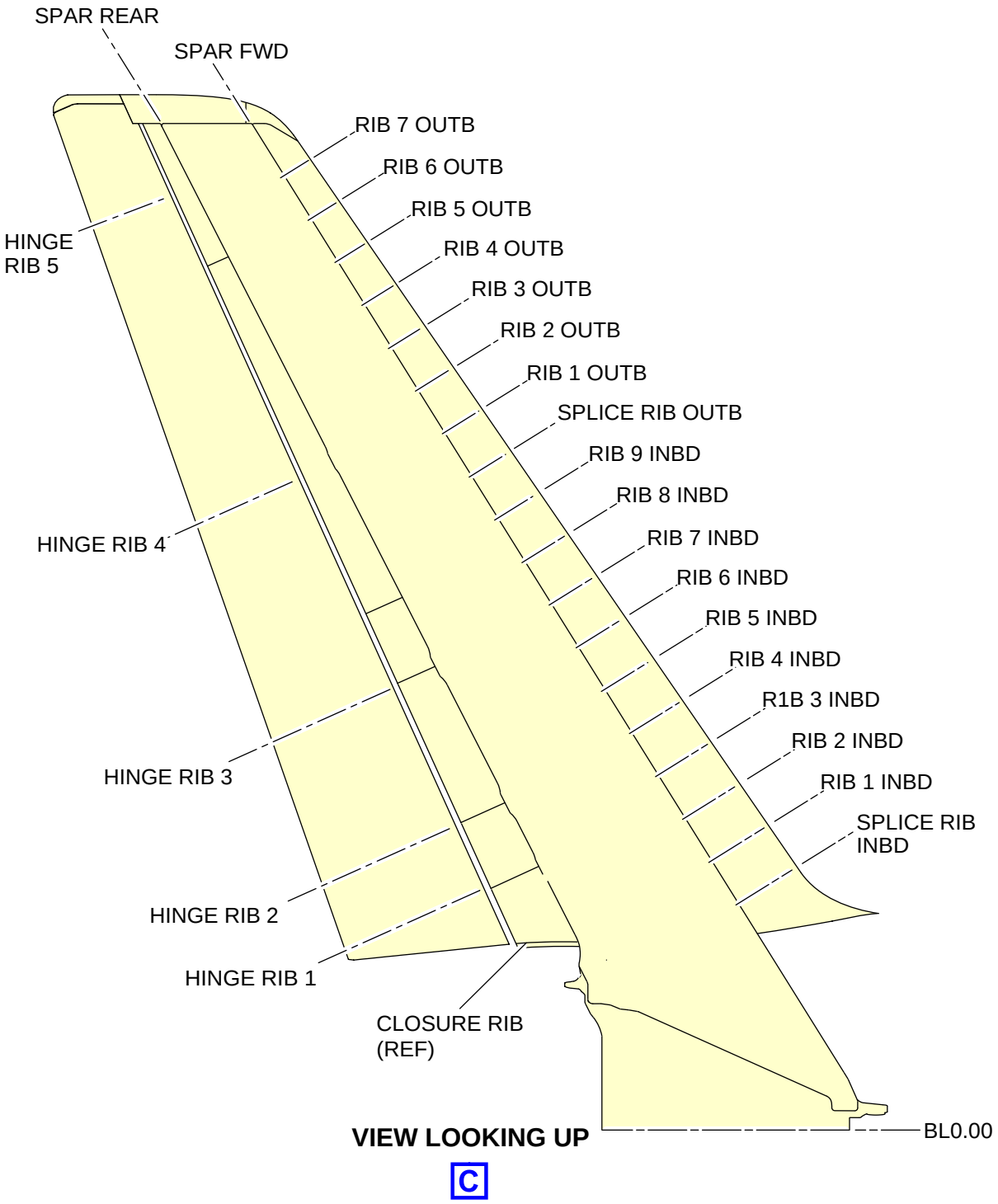

ICN-BD500-A-J062002-A-3AB48-76796-A-001-01

Figure 3 Horizontal empennage stations - (Sheet 3 of 5)

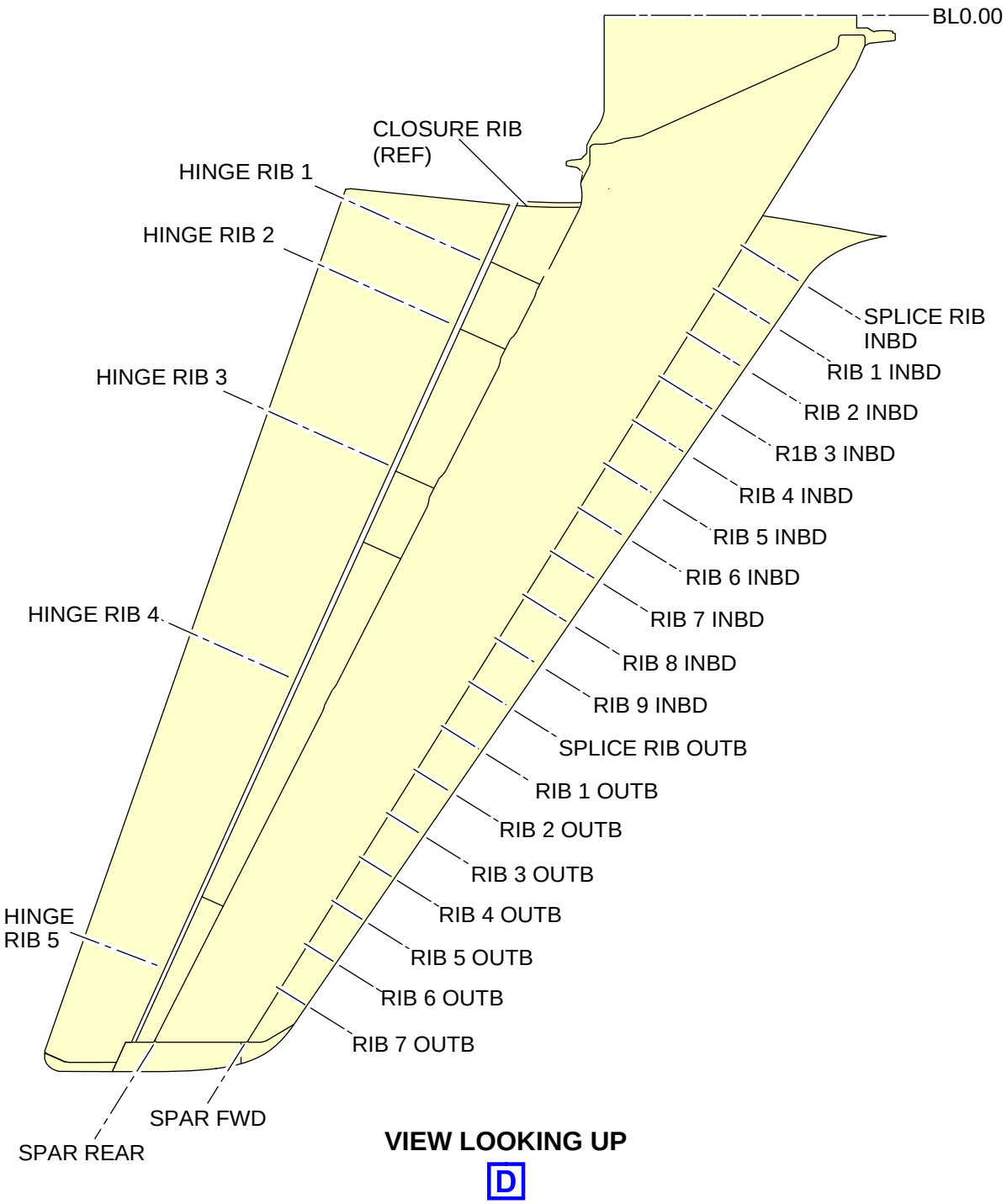

ICN-BD500-A-J062002-A-3AB48-76797-A-001-01

Figure 3 Horizontal empennage stations - (Sheet 4 of 5)

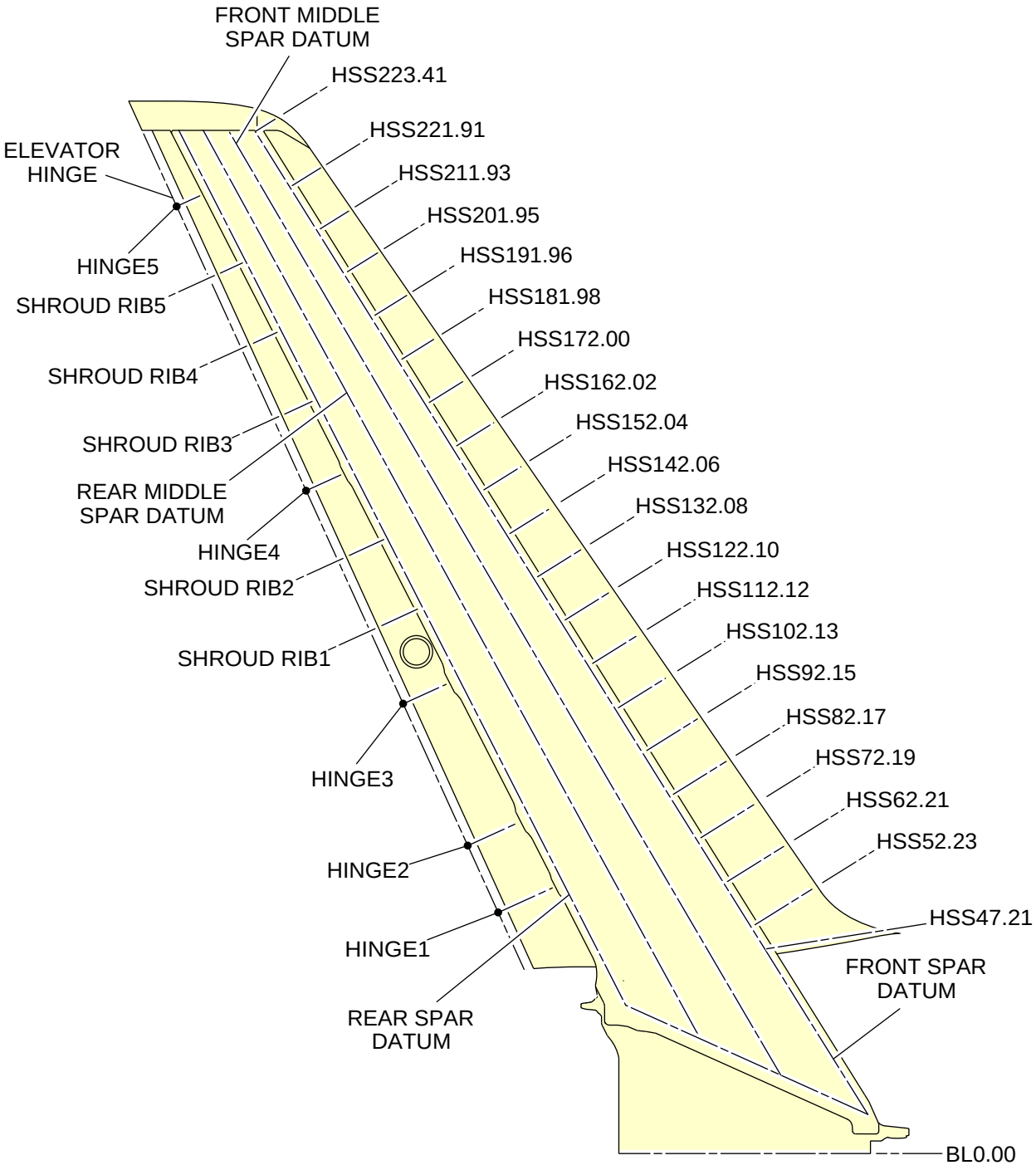

ICN-BD500-A-J062002-A-3AB48-01103-A-001-01

Figure 3 Horizontal empennage stations - (Sheet 5 of 5)

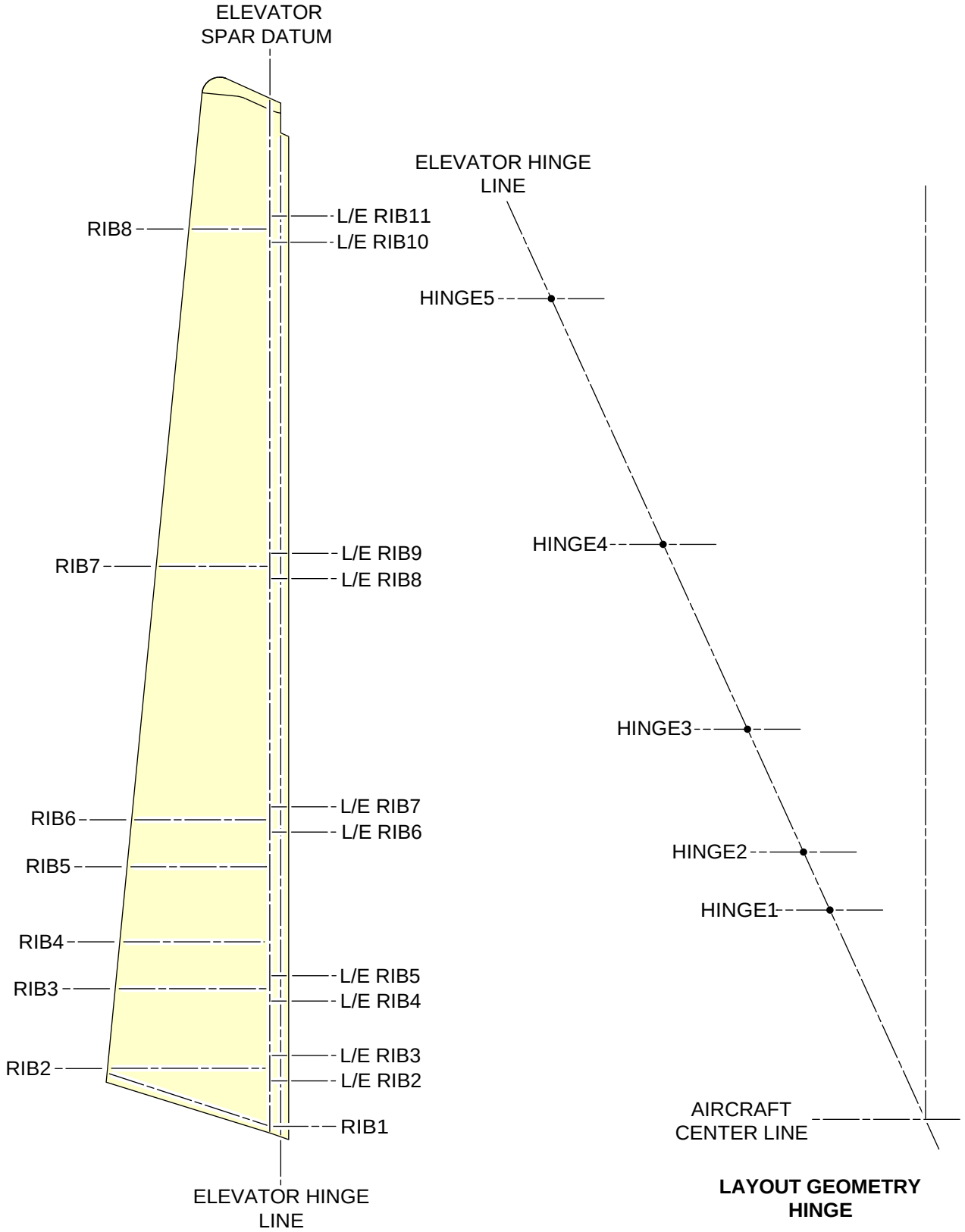

ICN-BD500-A-J062002-A-3AB48-01104-A-001-01

Figure 4 Elevator reference lines

Engine/nacelle and pylon stations - Technical data

Applicability: 50001-54999, 55001-59999

Table of contents

Page

Engine/nacelle and pylon stations - Technical data..... 1
References..... 1
Description..... 1
1 Introduction..... 1
1.1 Engine/nacelle and pylon stations..... 1
1.1.1 Engine/nacelle stations..... 1
1.1.2 Pylon stations..... 1

List of tables

Page

1 References..... 1

List of figures

Page

1 Engine/nacelle stations..... 2
2 Pylon stations..... 3

References

Table 1 References

Data Module/Technical Publication	Title
None	

Description

1 Introduction

1.1 Engine/nacelle and pylon stations

Refer to the engines/nacelles and pylons, instead of stations, frames are used as reference lines.

1.1.1 Engine/nacelle stations

- Engine/nacelle with reference to the Fuselage Station (FS), refer to Fig. 1 .
- The FS references in this manual are used to measure or specify distance along the nacelle.

1.1.2 Pylon stations

- Pylon with reference to the FS, refer to Fig. 2 .
- The FS references in this manual are used to measure or specify distance along the pylon.

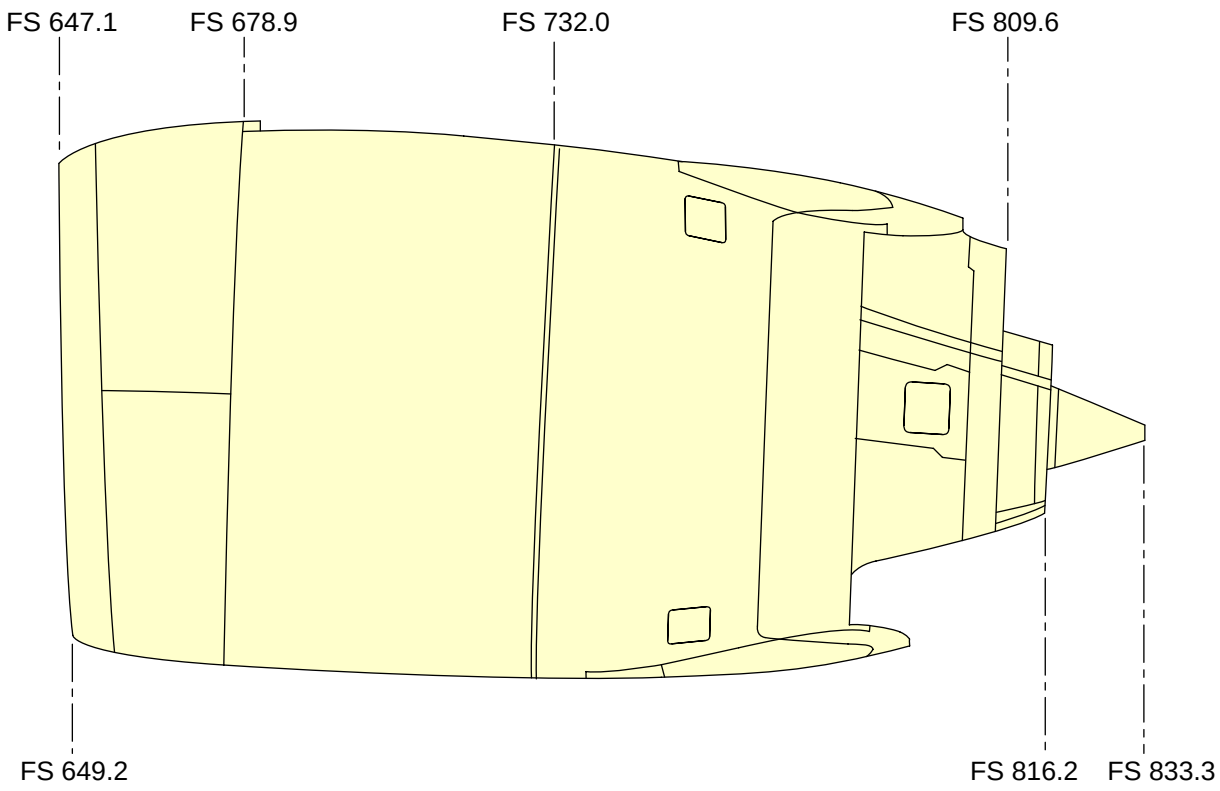

ICN-BD500-A-J062003-A-3AB48-11220-A-001-01

Figure 1 Engine/nacelle stations

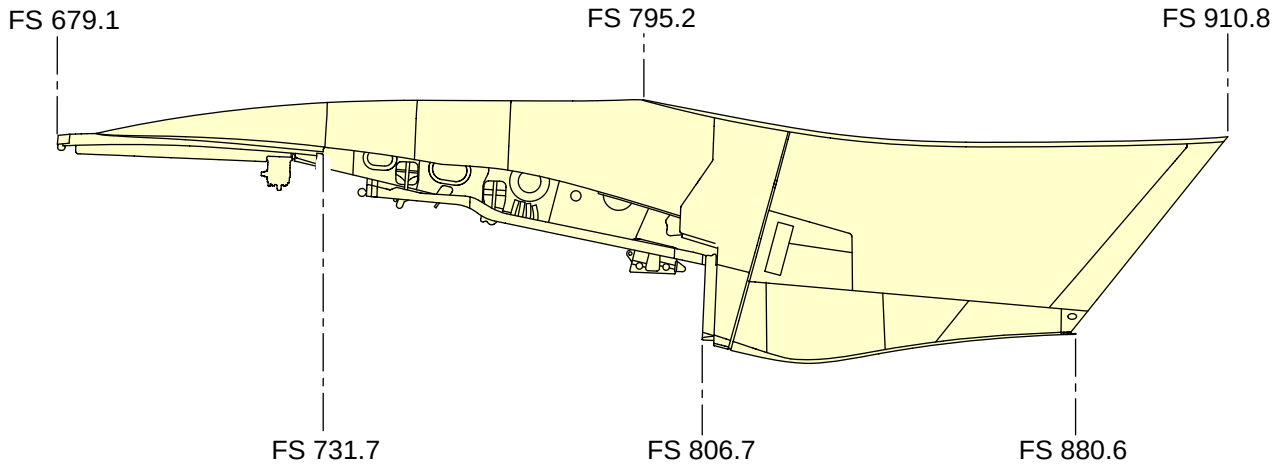

ICN-BD500-A-J062003-A-3AB48-11221-A-001-01

Figure 2 Pylon stations

Intentionally left blank

Wing stations - Technical data

Applicability: 50001-54999, 55001-59999

Table of contents

Page

Wing stations - Technical data..... 1
References..... 1
Description..... 1
1 Introduction..... 1

List of tables

Page

1 References..... 1

List of figures

Page

1 Wing stations..... 2

References

Table 1 References

Data Module/Technical Publication	Title
None	

Description

1 Introduction

The Wing Station (WS) are reference planes found at right angles to the wing center line. The primary WS datum line (WS0.00) is 630.51 in. inboard of the wingtip (WS630.51) (Refer to Fig. 1).

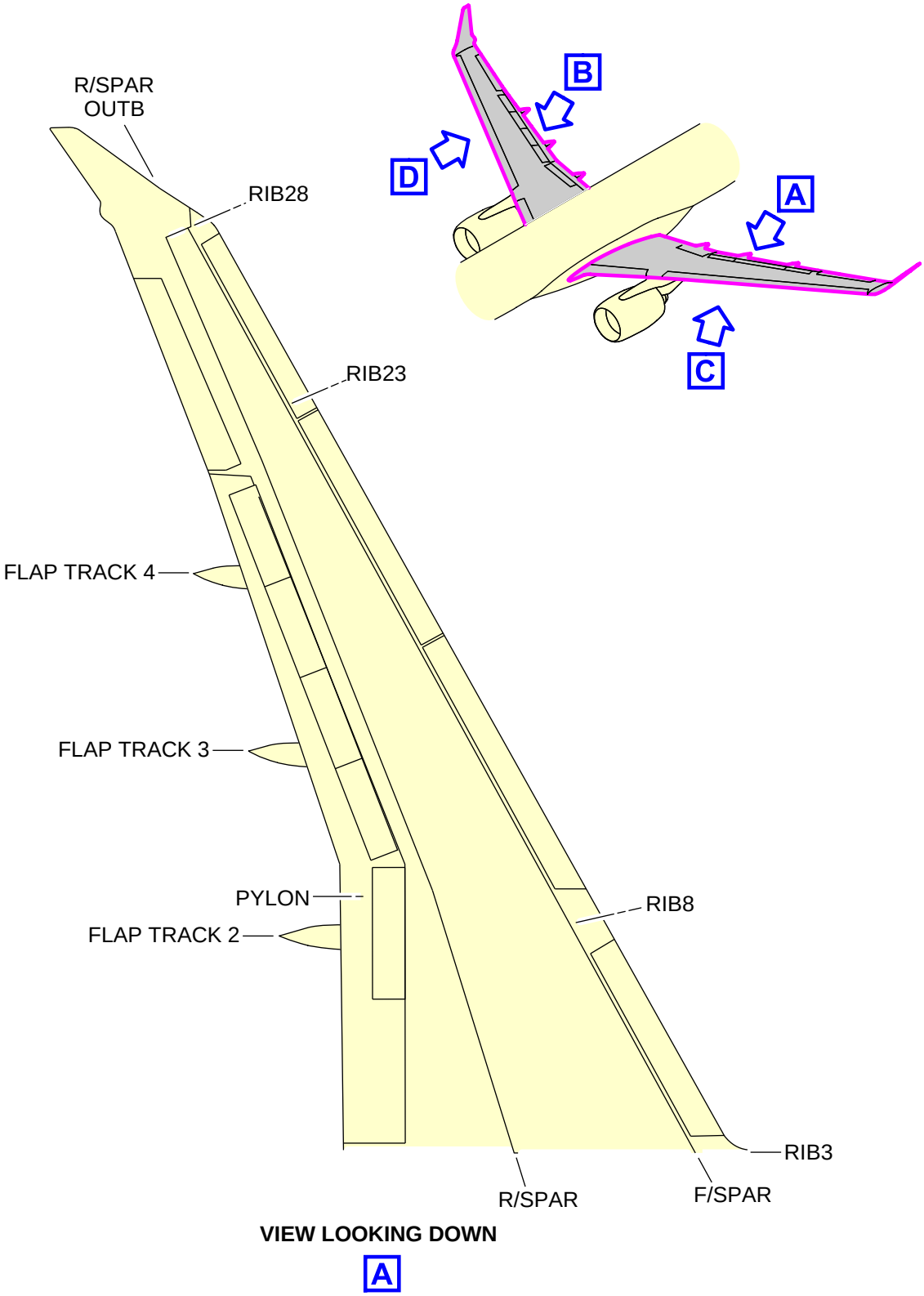

ICN-BD500-A-J062004-A-3AB48-76850-A-001-01

Figure 1 Wing stations - (Sheet 1 of 5)

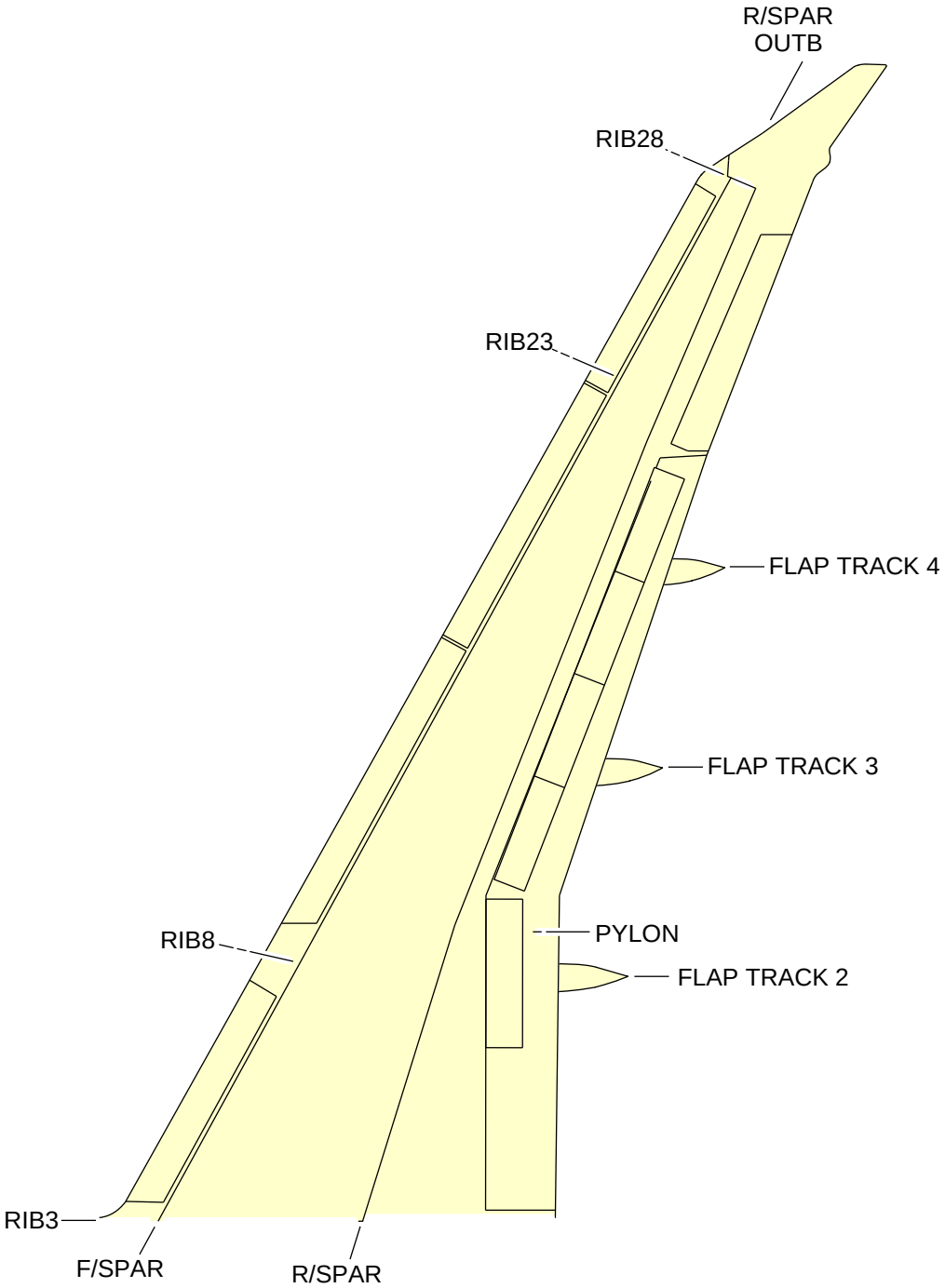

VIEW LOOKING DOWN

B

ICN-BD500-A-J062004-A-3AB48-76852-A-002-01

Figure 1 Wing stations - (Sheet 2 of 5)

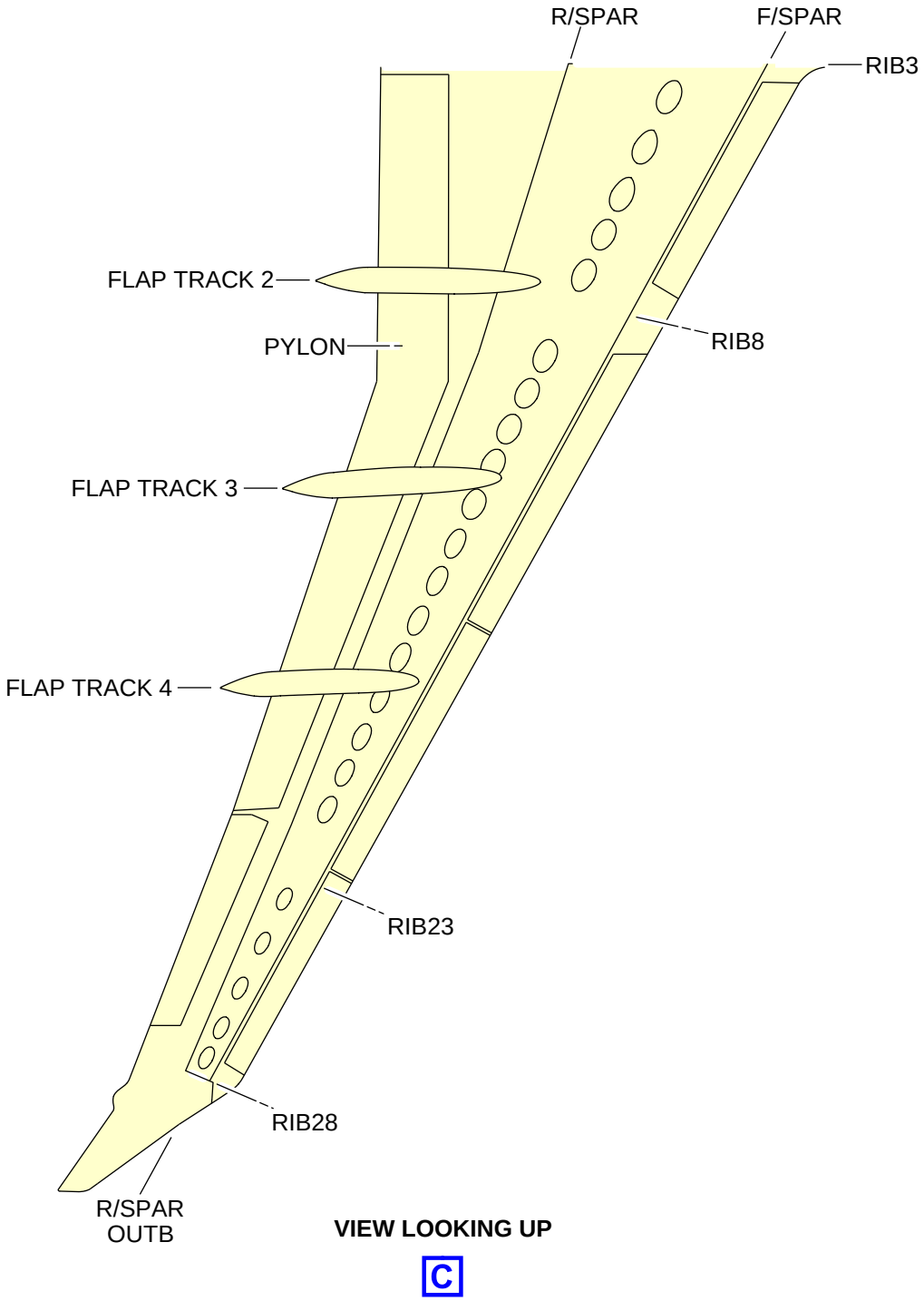

ICN-BD500-A-J062004-A-3AB48-76851-A-002-01

Figure 1 Wing stations - (Sheet 3 of 5)

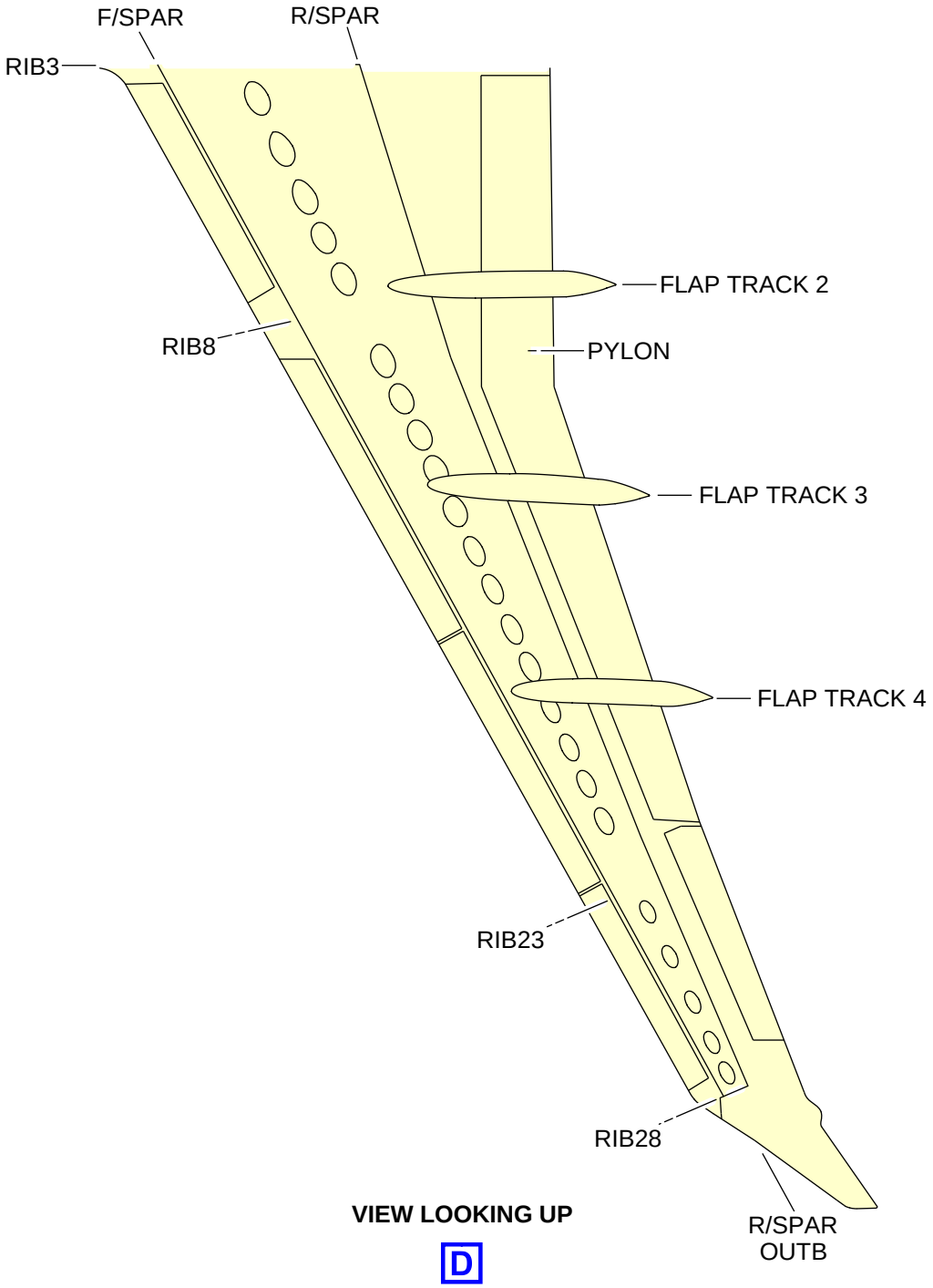

ICN-BD500-A-J062004-A-3AB48-76853-A-001-01

Figure 1 Wing stations - (Sheet 4 of 5)

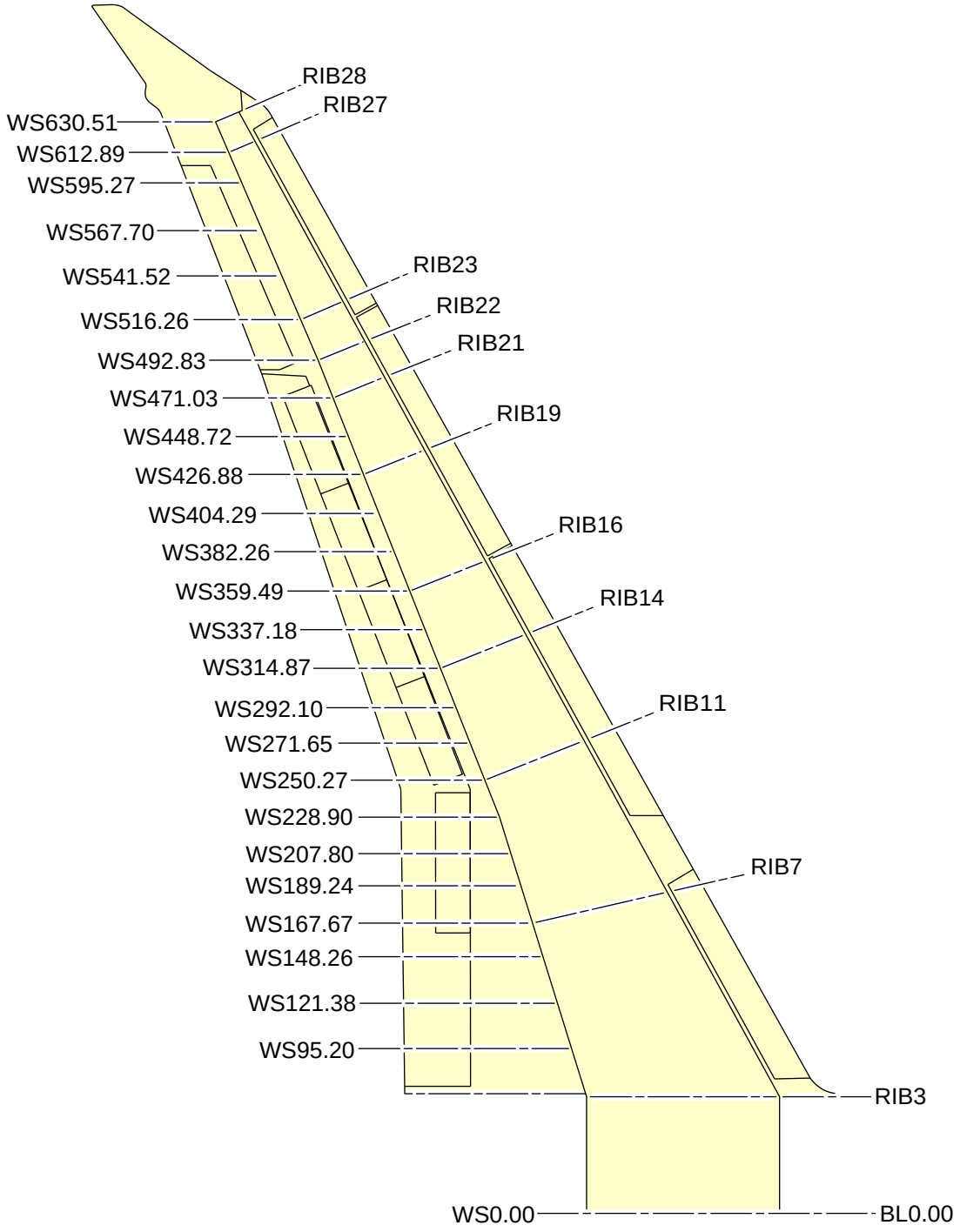

ICN-BD500-A-J062004-A-3AB48-01100-A-001-01

Figure 1 Wing stations - (Sheet 5 of 5)

Major zones - Technical data

Applicability: 50001-54999, 55001-59999

Table of contents

Page

Major zones - Technical data..... 1
References..... 1
Description..... 1
1 Introduction..... 1

List of tables

Page

1 References..... 1

List of figures

Page

1 Major zones..... 2

References

Table 1 References

Data Module/Technical Publication	Title
None	

Description

1 Introduction

This section gives identification data for the aircraft zones. Each zone is identified with a three-digit number to help in the location of components.

The aircraft is divided into eight primary zones. Each primary zone is identified by the first number of the three-digit number followed by two zeros. The eight primary zones are identified as follows:

Zone: 100, Lower half of the fuselage, from the nose to the aft pressure bulkhead

Zone: 200, Upper half of the fuselage, from the forward pressure bulkhead to the aft pressure bulkhead

Zone: 300, Empennage, aft fuselage and tailcone

Zone: 400, Power plants (including engines/nacelles and pylons)

Zone: 500, Left wing

Zone: 600, Right wing

Zone: 700, Landing gears and landing gear doors

Zone: 800, Doors

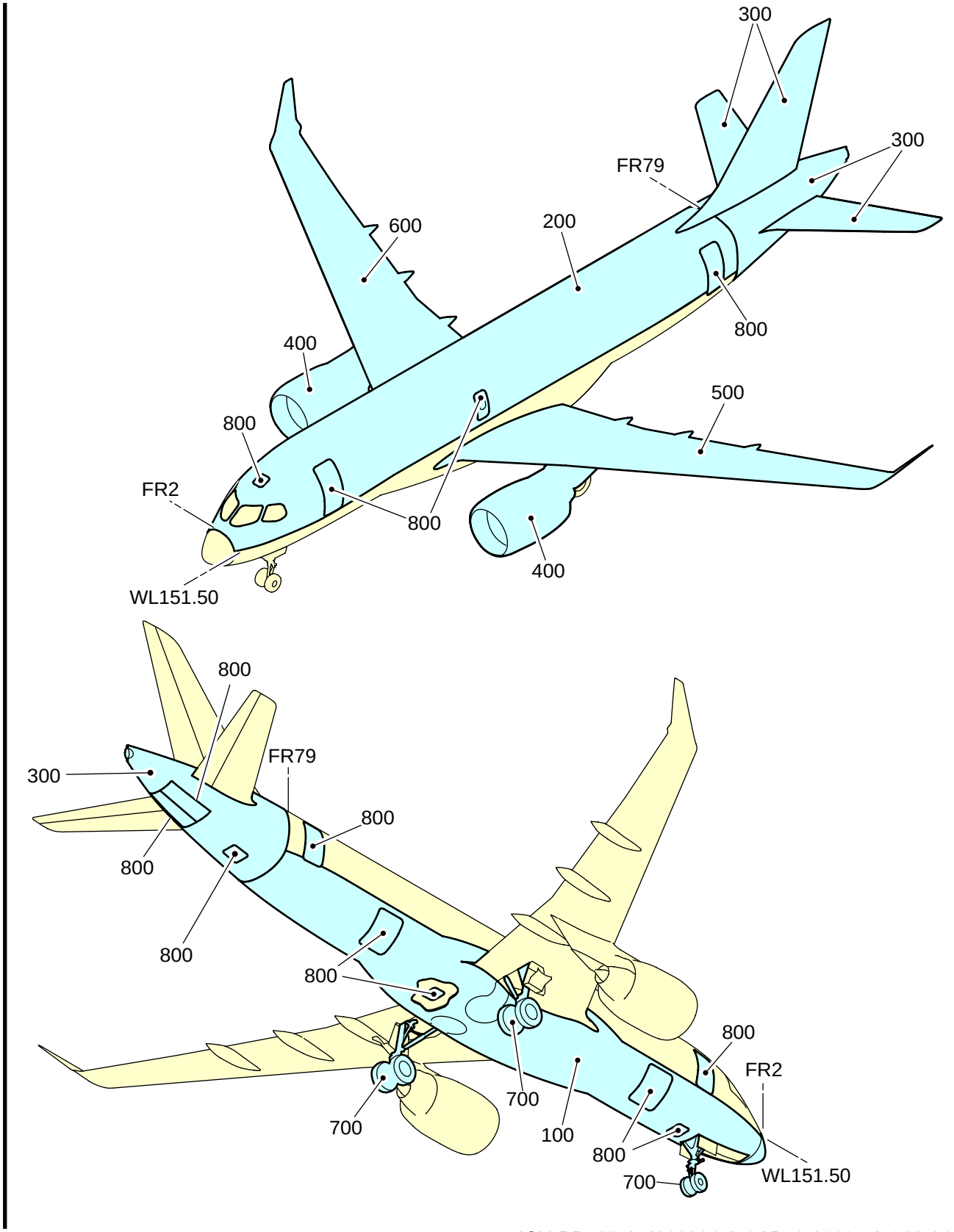

ICN-BD500-A-J063001-A-3AB48-01107-A-002-01

Figure 1 Major zones

External air conditioning source - Disconnect procedure

Applicability: 50001-54999, 55001-59999

Table of contents

Page

External air conditioning source - Disconnect procedure..... 1
References..... 1
Common information..... 2
Preliminary requirements..... 2
Procedure..... 3
Requirements after job completion..... 6

List of tables

Page

1 References..... 1
2 Required conditions..... 2
3 Support equipment..... 2
4 Consumables, materials, and expendables..... 2
5 Spares..... 3
6 Required conditions..... 6

List of figures

Page

1 Low pressure ground system..... 5

References

Table 1 References

Data Module/Technical Publication	Title
BD500-A-J21-00-00-00AAA-913G-A	ECS safety precautions - General maintenance safety procedure
BD500-A-J52-11-00-01AAA-740A-A	Forward Passenger Door (FPD) - Close after access procedure
BD500-A-J52-12-00-01AAA-740A-A	Aft Passenger Door (APD) - Close after access procedure
BD500-A-J52-45-00-01AAA-740A-A	Forward Service Door (FSD) - Close after access procedure
BD500-A-J52-46-00-01AAA-740A-A	Aft Service Door (ASD) - Close after access procedure
BD500-A-J52-42-00-01AAA-740A-A	Forward avionics compartment door - Close after access procedure
BD500-A-J52-43-00-01AAA-740A-A	Mid avionics compartment door - Close after access procedure
BD500-A-J52-30-00-01AAA-740A-A	Cargo compartment door - Close after access procedure

Common information

This data module gives the procedure to remove the external source of air conditioning from the aircraft. The air conditioning is supplied to the aircraft through a Low Pressure Ground Connection (LPGC) installed in the Wing To Body Fairing (WTBF).

Preliminary requirements

Production maintenance data

Zones	191		Forward wing to fuselage fairing, left side
Access points	191BB	Door	

Required conditions

Table 2 Required conditions

Action/Condition	Data Module/Technical publication
Make sure that the aircraft is safe for maintenance.	
Obey all the Environmental Control System (ECS) safety precautions.	BD500-A-J21-00-00-00AAA-913G-A

Support equipment

Table 3 Support equipment

Name	Identification/Reference	Quantity	Remark
Heating or air conditioning cart	STD-0133	1	Used for environmental control of the aircraft when it is de-energized.

Consumables, materials, and expendables

Table 4 Consumables, materials, and expendables

Name	Identification/Reference	Quantity	Remark
None			

Spares

Table 5 Spares

Name	Identification/Reference	Quantity	Remark
None			

Safety conditions

WARNING

Be careful when you remove or install the Low Pressure Ground Connection (LPGC) cover. The cover internal edges are sharp and can cause injuries to personnel.

Procedure

1 Remove the air conditioning cart (Commercially available, Pt. No. STD-0133)(Commercially available, Pt. No. STD-0133) as follows:

1.1 Stop the air conditioning supply.

1.2 Disconnect the air conditioning cart (Commercially available, Pt. No. STD-0133)(Commercially available, Pt. No. STD-0133) from the LPGC.

1.3 Instal the cover of the LPGC.

Note

Make sure the pin of the lanyard is correctly installed and secured on the LPGC cover.

1.4 Close the applicable door that follows:

- Forward Passenger Door (FPD). Refer to BD500-A-J52-11-00-01AAA-740A-A.
- Aft Passenger Door (APD). Refer to BD500-A-J52-12-00-01AAA-740A-A.
- Forward Service Door (FSD). Refer to BD500-A-J52-45-00-01AAA-740A-A.
- Aft Service Door (ASD). Refer to BD500-A-J52-46-00-01AAA-740A-A.
- Forward avionics compartment door. Refer to BD500-A-J52-42-00-01AAA-740A-A.
- Mid avionics compartment door. Refer to BD500-A-J52-43-00-01AAA-740A-A.
- Cargo compartment door. Refer to BD500-A-J52-30-00-01AAA-740A-A.

1.5 Make sure the EMER DEPRESS Push Button Annunciator (PBA) is in the normal condition as follows:

- On the pressurization panel, push out the EMER DEPRESS PBA.
- Make sure that the PBA goes off.
- On the Engine Indication and Crew Alerting System (EICAS) display, make sure that the EMER DEPRESS ON amber caution message does not show.

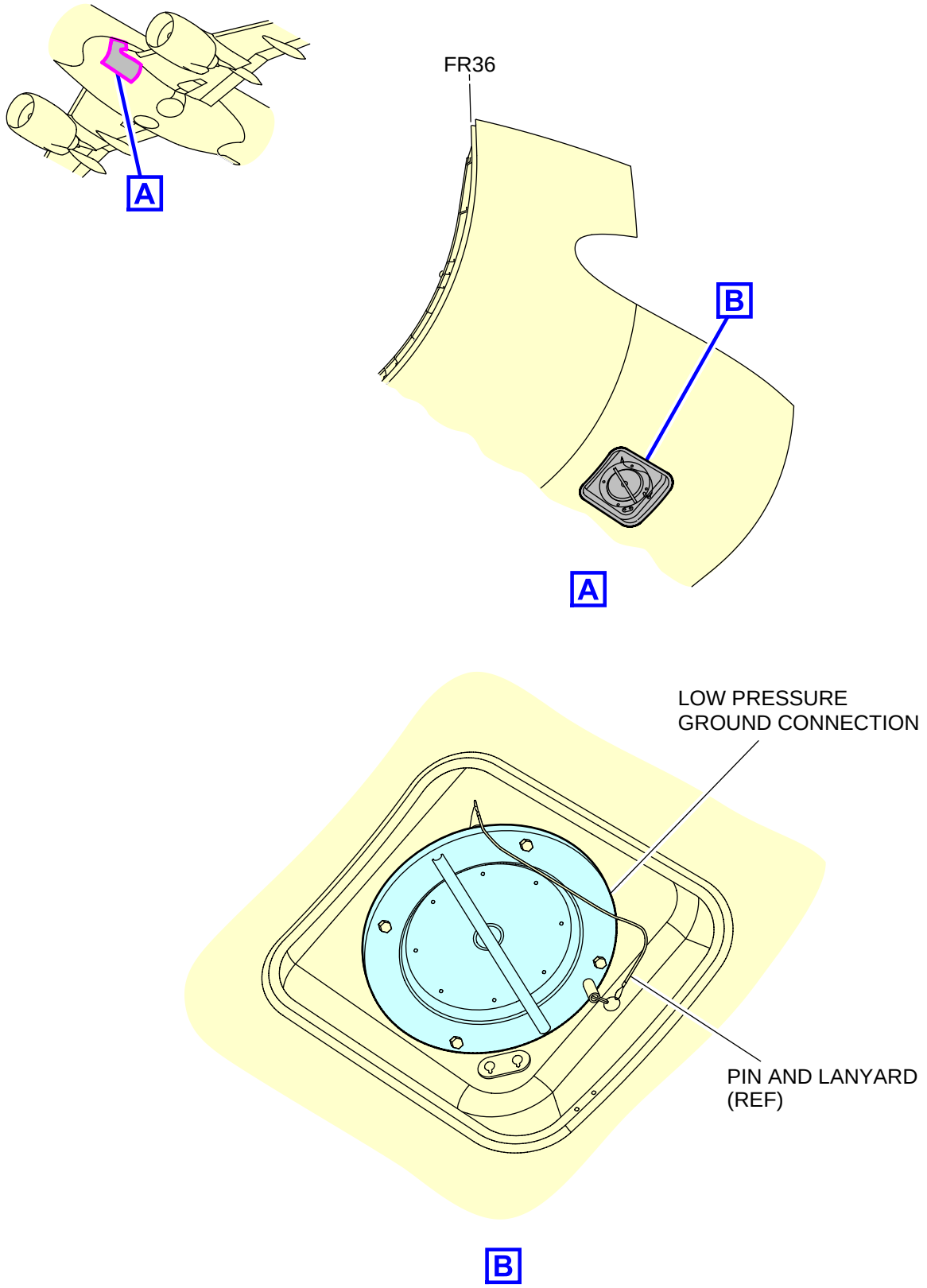

ICN-BD500-A-J212100-C-3AB48-19016-A-003-01

Figure 1 Low pressure ground system

Requirements after job completion

Required conditions

Table 6 Required conditions

Action/Condition	Data Module/Technical publication
Remove all tools, equipment, and unwanted materials from the work area.	
Make sure that the access door is closed. Refer to the access points table above for details.	

External air conditioning source - Connect procedure

Applicability: 50001-54999, 55001-59999

Table of contents

Page

External air conditioning source - Connect procedure..... 1
References..... 1
Common information..... 2
Preliminary requirements..... 2
Procedure..... 3
Requirements after job completion..... 8

List of tables

Page

1 References..... 1
2 Required conditions..... 2
3 Support equipment..... 2
4 Consumables, materials, and expendables..... 3
5 Spares..... 3
6 Minimum temperature and mass flow to keep water from freezing..... 5
7 Required conditions..... 8

List of figures

Page

1 Low pressure ground system - Connect procedure..... 7

References

Table 1 References

Data Module/Technical Publication	Title
BD500-A-J21-00-00-00AAA-913G-A	ECS safety precautions - General maintenance safety procedure
BD500-A-J24-41-00-01AAA-761A-A	External AC power source - Energize electrical network
BD500-A-J52-11-00-01AAA-540A-A	Forward Passenger Door (FPD) - Open for access procedure
BD500-A-J52-12-00-01AAA-540A-A	Aft Passenger Door (APD) - Open for access procedure
BD500-A-J52-45-00-01AAA-540A-A	Forward Service Door (FSD) - Open for access procedure
BD500-A-J52-46-00-01AAA-540A-A	Aft Service Door (ASD) - Open for access procedure
BD500-A-J52-42-00-01AAA-540A-A	Forward avionics compartment door - Open for access procedure
BD500-A-J52-43-00-01AAA-540A-A	Mid avionics compartment door - Open for access procedure
BD500-A-J52-30-00-01AAA-540A-A	Cargo compartment door - Open for access procedure

Data Module/Technical Publication	Title
BD500-A-J00-00-00-18AAA-030A-A	Terminal servicing - Technical data

Common information

This data module gives the procedure to connect an external source of air conditioning. The air conditioning is supplied to the aircraft through a Low Pressure Ground Connection (LPGC) installed in the Wing To Body Fairing (WTBF).

Preliminary requirements

Production maintenance data

Zones	191		Forward wing to fuselage fairing, left side
Access points	191BB	Door	

Required conditions

Table 2 Required conditions

Action/Condition	Data Module/Technical publication
Make sure that the aircraft is safe for maintenance.	
Obey all the Environmental Control System (ECS) safety precautions.	BD500-A-J21-00-00-00AAA-913G-A
Make sure that the access door is open. Refer to the access points table above for details.	
Connect and energize the external electrical system.	BD500-A-J24-41-00-01AAA-761A-A

Support equipment

Table 3 Support equipment

Name	Identification/Reference	Quantity	Remark
Heating or air conditioning cart	STD-0133	1	Used for environmental control of the aircraft when it is de-energized.

Consumables, materials, and expendables

Table 4 Consumables, materials, and expendables

Name	Identification/Reference	Quantity	Remark
None			

Spares

Table 5 Spares

Name	Identification/Reference	Quantity	Remark
None			

Safety conditions

WARNING

Be careful when you remove or install the Low Pressure Ground Connection (LPGC) cover. The cover internal edges are sharp and can cause injuries to personnel.

Procedure

1 Connect the air conditioning cart (Commercially available, Pt. No. STD-0133)(Commercially available, Pt. No. STD-0133) as follows:

1.1 Do one of these steps to make sure that there is an exit for the conditioned air:

1.1.1 Open one of the applicable doors that follows:

- Forward Passenger Door (FPD). Refer to BD500-A-J52-11-00-01AAA-540A-A.
- Aft Passenger Door (APD). Refer to BD500-A-J52-12-00-01AAA-540A-A.
- Forward Service Door (FSD). Refer to BD500-A-J52-45-00-01AAA-540A-A.
- Aft Service Door (ASD). Refer to BD500-A-J52-46-00-01AAA-540A-A.
- Forward avionics compartment door. Refer to BD500-A-J52-42-00-01AAA-540A-A.
- Mid avionics compartment door. Refer to BD500-A-J52-43-00-01AAA-540A-A.
- Cargo compartment door. Refer to BD500-A-J52-30-00-01AAA-540A-A.

Note

A minimum of one cabin door must be fully open to supply air ventilation and to prevent cabin pressurization.

Note

For freezing or below freezing temperatures, you must exclusively open the mid avionics compartment door. This will prevent the aircraft from pressurizing and limit the amount of cold air from entering the aircraft from outside.

Note

For freezing or below freezing temperatures, lavatory doors must be kept open while maintaining cabin temperature.

1.1.2 Open the cabin pressure outflow valve as follows:

Note

Do not leave the aircraft unattended. If the cabin pressure outflow valve is inadvertently closed, this will cause cabin pressurization.

1.1.2.1 Make sure that the thermal circuit breakers that follow are closed:

- IASC 1A (EPC1-H7)
- IASC 1B (EPC2-E6)
- IASC 2A (EPC2-E7)
- IASC 2B (R-CBP-D1)
- ICCP OVHD 3 (R-CBP-F2)

1.1.2.2 Make sure that the electronic circuit breakers that follow are IN on the circuit breaker synoptic page:

- OUTFLOW VLV AUTO 1 (CDC1-6-9)
- ICCP OVHD 1 (CDC1-7-13)
- OUTFLOW VLV AUTO 2 (CDC2-5-9)
- ICCP OVHD 2 (CDC4-5-8)

1.1.2.3 On the pressurization panel, lift the guard and push the EMER DEPRESS Push Button Annunciator (PBA).

1.1.2.4 Make sure that the PBA comes on.

1.1.2.5 On the Engine Indication and Crew Alerting System (EICAS) display, make sure that the EMER DEPRESS ON (amber) caution message shows.

1.1.2.6 On the EICAS display, make sure that the AUTO PRESS FAIL (amber) caution message does not show.

1.2 Remove the cover of the LPGC.

CAUTION

Make sure the air conditioning distribution system is not already pressurized by the air conditioning packs. Using the Low Pressure Ground Connection (LPGC) and Auxiliary Power Unit (APU) supplying air conditioning packs to the Environmental Control System (ECS) simultaneously can cause damage to the air conditioning system.

1.3 Connect the air conditioning cart (Commercially available, Pt. No. STD-0133)(Commercially available, Pt. No. STD-0133) to the LPGC. Refer to BD500-A-J00-00-00-18AAA-030A-A for cart requirements

1.4 Apply the air conditioning as required.

Note

To keep all the water and waste system components in the aircraft from freezing. Refer to Table 6

Note

If the WATER SYSTEM INOPERATIVE message is shown on the Cabin Management System (CMS) after it is ready to operate, the CABIN COM FAULT advisory message is not shown and the Crew Terminal (CT) shows all services installed, then the WTR WASTE CTLR DC BUS 1 SSPC in ATA 38 on the circuit breaker synoptic page should be reset. The water and waste system then becomes available again.

Table 6 Minimum temperature and mass flow to keep water from freezing

Minimum cabin temperature - Outside Air Temperature (OAT) and LPGC air mass flow.										
OAT (°C)	LPGC air mass flow (lb/min)									
	50	60	70	80	90	100	110	120	130	140[1]

Minimum cabin temperature - Outside Air Temperature (OAT) and LPGC air mass flow.										
0	2°C	2°C	2°C	2°C	2°C	2°C	2°C	2°C	2°C	2°C
-10	11°C	10°C	9°C	9°C	8°C	8°C	8°C	7°C	7°C	7°C
-20	20°C	18°C	17°C	16°C	15°C	14°C	13°C	13°C	12°C	12°C
-30	29°C	26°C	24°C	23°C	21°C	20°C	19°C	18°C	17°C	17°C
-40	N/A		32°C	30°C	28°C	26°C	25°C	24°C	22°C	21°C
-54	N/A					35°C	33°C	31°C	30°C	28°C
1	Alternative: The recommended minimum operating conditions calculated from LPGC data at 140 lb/min are considered to be conservatively applicable when operating from the Auxiliary Power Unit (APU) on the dual packs or on the single pack with RECIRC AIR selected AUTO.									

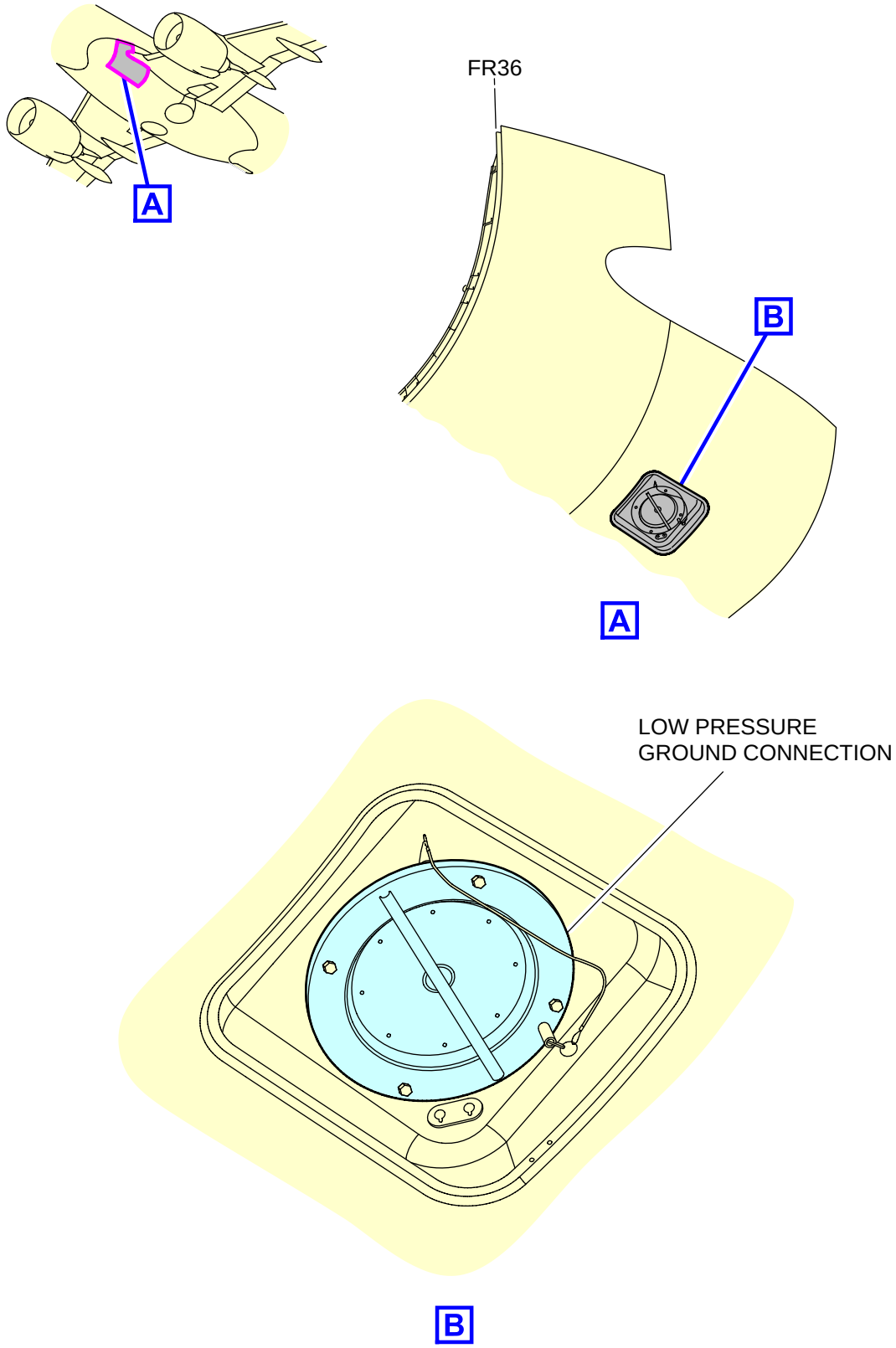

ICN-BD500-A-J212100-C-3AB48-19016-A-001-01

Figure 1 Low pressure ground system - Connect procedure

Requirements after job completion

Required conditions

Table 7 Required conditions

Action/Condition	Data Module/Technical publication
None	

Hydraulic systems No. 1 or No. 2 - Drain Hydraulic

Applicability: 50001-54999, 55001-59999

Table of contents

Page

Hydraulic systems No. 1 or No. 2 - Drain Hydraulic..... 1
References..... 1
Common information..... 2
Preliminary requirements..... 2
Procedure..... 3
Requirements after job completion..... 9

List of tables

Page

1 References..... 1
2 Required conditions..... 2
3 Support equipment..... 3
4 Consumables, materials, and expendables..... 3
5 Spares..... 3
6 Required conditions..... 9

List of figures

Page

1 Hydraulic systems No. 1 and No. 2 - Drain other liquid - Option 1..... 6
2 Hydraulic systems No. 1 and No. 2 - Drain other liquid - Option 1..... 7
3 Hydraulic systems No. 1 and No. 2 - Drain other liquid - Option 2..... 8

References

Table 1 References

Data Module/Technical Publication	Title
BD500-A-J12-10-29-01AAA-562A-A	Hydraulic systems No. 1 or No. 2 - Depressurize hydraulics
BD500-A-J24-00-00-01AAA-561A-A	Electrical power - General - De-Energize electrical network
BD500-A-J24-00-00-01AAA-761A-A	Electrical power - General - Energize electrical network
BD500-A-J24-00-00-01AAA-913G-A	Electrical/Electronic safety precautions - General maintenance safety procedure
BD500-A-J27-00-00-01AAA-913G-A	Flight control safety precautions - General maintenance safety procedure
BD500-A-J29-00-00-00AAA-913G-A	Hydraulic safety precautions - General maintenance safety procedure
BD500-A-J29-00-00-01AAA-913G-A	Hydraulic technical precautions - General maintenance safety procedure
BD500-A-J29-11-30-01AAA-200B-A	Hydraulic System No. 1 and No. 2 fluid reservoir - Quantity check

Common information

This data module gives the procedure to drain the hydraulic system No. 1 and No. 2 (written as "hydraulic system" in this procedure). The hydraulic systems are installed in Wing To Body Fairing (WTBF). The procedure for the hydraulic system No. 1 is given. Differences for the hydraulic system No. 2 are identified.

Preliminary requirements

Production maintenance data

Zones	195		Aft wing to fuselage fairing, left side
	196		Aft wing to fuselage fairing, right side
	211		Flight compartment, left side
	212		Flight compartment, right side
Access points	195EB	Panel	
	196GB	Panel	

Required conditions

Table 2 Required conditions

Action/Condition	Data Module/Technical publication
Make sure that the aircraft is safe for maintenance.	
Obey all the electrical/electronic safety precautions.	BD500-A-J24-00-00-01AAA-913G-A
Obey all the flight control safety precautions.	BD500-A-J27-00-00-01AAA-913G-A
Obey all the hydraulic safety precautions.	BD500-A-J29-00-00-00AAA-913G-A
Obey all the hydraulic technical precautions.	BD500-A-J29-00-00-01AAA-913G-A
Depressurize the applicable hydraulic system.	BD500-A-J12-10-29-01AAA-562A-A
Energize the electrical network.	BD500-A-J24-00-00-01AAA-761A-A
Make sure that the access panels are removed. Refer to the access points table above for details.	

Support equipment

Table 3 Support equipment

Name	Identification/Reference	Quantity	Remark
Hydraulic ground cart	58311GQ 5833	1	
Fluid container	STD-0079	1	

Consumables, materials, and expendables

Table 4 Consumables, materials, and expendables

Name	Identification/Reference	Quantity	Remark
Cloths, cleaning, low-lint	05-001	AR	
Isopropyl alcohol (IPA)	11-004	AR	

Spares

Table 5 Spares

Name	Identification/Reference	Quantity	Remark
None			

Safety conditions

None

Procedure

1 Drain option 1 - Drain the applicable hydraulic system with a hydraulic power unit (59603, Pt. No. 58311GQ) as follows:

Note

This option is recommended when the need to empty completely the reservoir is required.

Refer to Fig. 1 and Fig. 2 .

1.1 Make sure that the reservoir of the hydraulic power unit (59603, Pt. No. 58311GQ) has the capacity to contain the hydraulic system reservoir fluid.

1.2 On the hydraulic service panel, do as follows:

1.2.1 Remove the cap (3) from the return quick disconnect coupling (4).

1.2.2 Connect the hydraulic power unit (59603, Pt. No. 58311GQ) return line to the return quick disconnect coupling (4).

1.2.3 Remove the cap (1) from the pressure quick disconnect coupling (2).

1.2.4 Connect the hydraulic power unit (59603, Pt. No. 58311GQ) pressure line to the pressure quick disconnect coupling (2).

1.2.5 If required, use a cloth (05-001) to clean the hydraulic fluid leakage from the work area with isopropyl alcohol (11-004) .

CAUTION

Do not pressurize the hydraulic systems with a ground hydraulic power-unit without the return line connected. If the return line must go into a container, make sure the return line is open before you apply pressure. You can cause damage to the hydraulic seals.

1.3 Set open loop mode on the hydraulic power unit (59603, Pt. No. 58311GQ) . Refer to manufacturer instructions.

1.4 Start the hydraulic power unit (59603, Pt. No. 58311GQ) . Refer to manufacturer instructions.

1.5 On the hydraulic power unit (59603, Pt. No. 58311GQ) , set the pressure to 3000 ±50 psi (20684.40 ±344.83 kPa).

1.6 On the HYD synoptic page, make sure that:

- The hydraulic pressure becomes stable at 3000 ±50 psi (20684.40 ±344.83 kPa).
- The hydraulic fluid level is 0%.

1.7 On the hydraulic power unit (59603, Pt. No. 58311GQ) , slowly decrease the pressure to 0 psi (0 kPa). Refer to manufacturer instructions.

1.8 Shutdown the hydraulic power unit (59603, Pt. No. 58311GQ) . Refer to manufacturer instruction.

1.9 On the hydraulic service panel, do as follows:

1.9.1 Disconnect the hydraulic power unit (59603, Pt. No. 58311GQ) pressure line from the pressure quick disconnect coupling (2).

1.9.2 Install the cap (1) on the pressure quick disconnect coupling (2).

1.9.3 Disconnect the hydraulic power unit (59603, Pt. No. 58311GQ) return line from the return quick disconnect coupling (4).

1.9.4 Install the cap (3) on the return quick disconnect coupling (4).

1.9.5 If required, use a cloth (05-001) to clean the hydraulic fluid leakage from the work area with isopropyl alcohol (11-004) .

2 Drain option 2 - Drain the applicable hydraulic system with the reservoir manual bleed/ relief valve as follows:

Note

This option is recommended when there is an overfill condition and fluid is required to be drain from the reservoir to bring it to the operational level limits.

Refer to Fig. 3 .

2.1 Disconnect the manual reservoir bleed/relief valve drain line at the ecology bottle connection to collect the fluid in a container (Commercially available, Pt. No. STD-0079) or use the ecology bottle to drain the hydraulic fluid.

2.2 Open the manual reservoir bleed/relief valve to supply a smooth flow of fluid.

2.3 Drain fluid in the container (Commercially available, Pt. No. STD-0079) or the ecology bottle.

2.4 Close the manual reservoir bleed/relief valve.

2.5 Connect the manual reservoir bleed/relief valve drain line at the ecology bottle connection or drain the ecology bottle.

2.6 If required, use a cloth (05-001) to clean the hydraulic fluid leakage from the work area with isopropyl alcohol (11-004) .

2.7 Do the applicable hydraulic fluid reservoir quantity check for system 1 and 2, refer to BD500-A-J29-11-30-01AAA-200B-A.

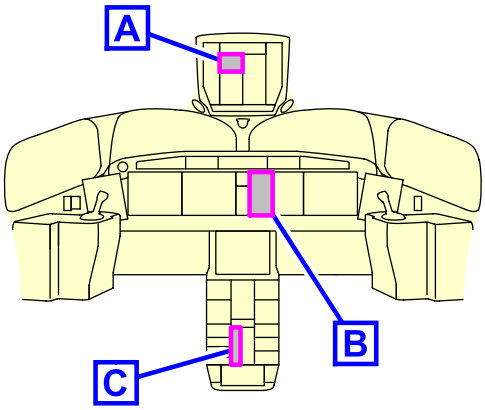

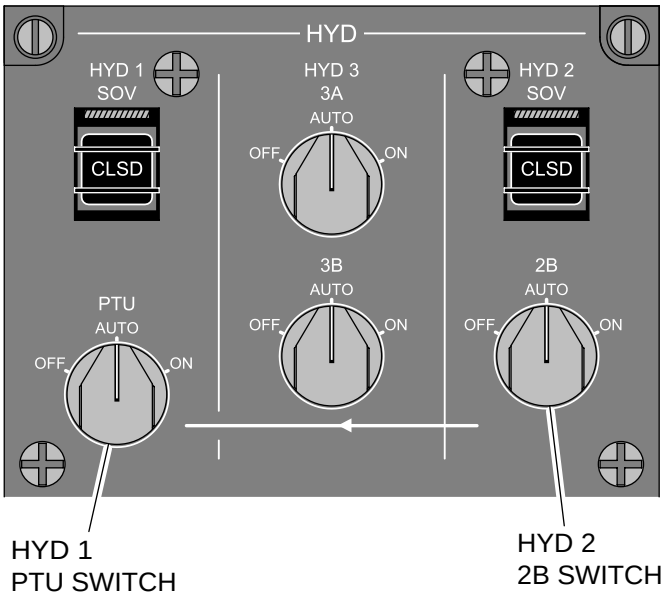

HYD CONTROL PANEL

A

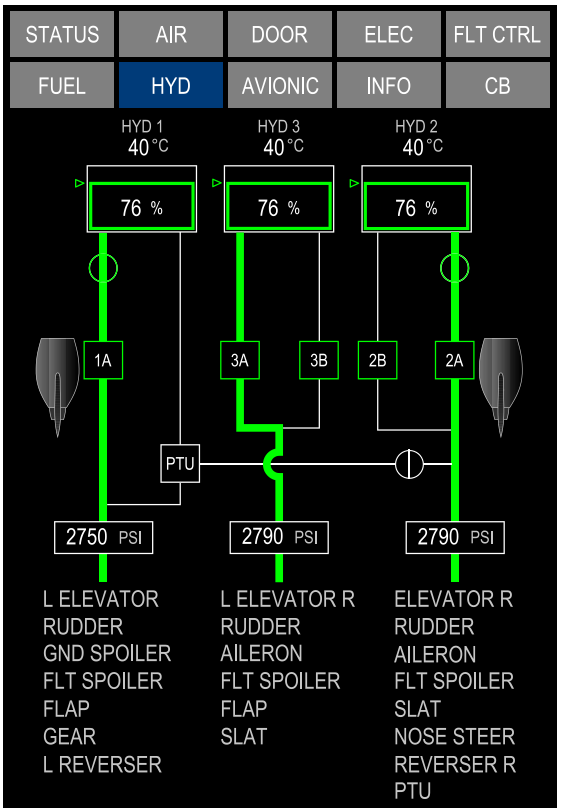

HYDRAULIC SYNOPTIC PAGE

B

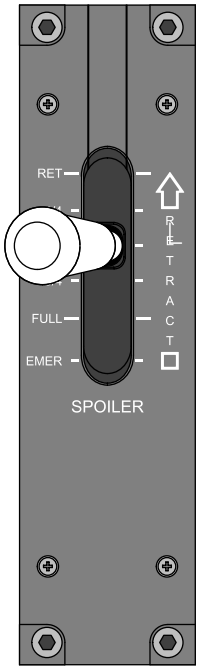

FLIGHT SPOILER CONTROL PANEL

C

ICN-BD500-A-J121029-C-3AB48-21042-A-002-01

Figure 1 Hydraulic systems No. 1 and No. 2 - Drain other liquid - Option 1

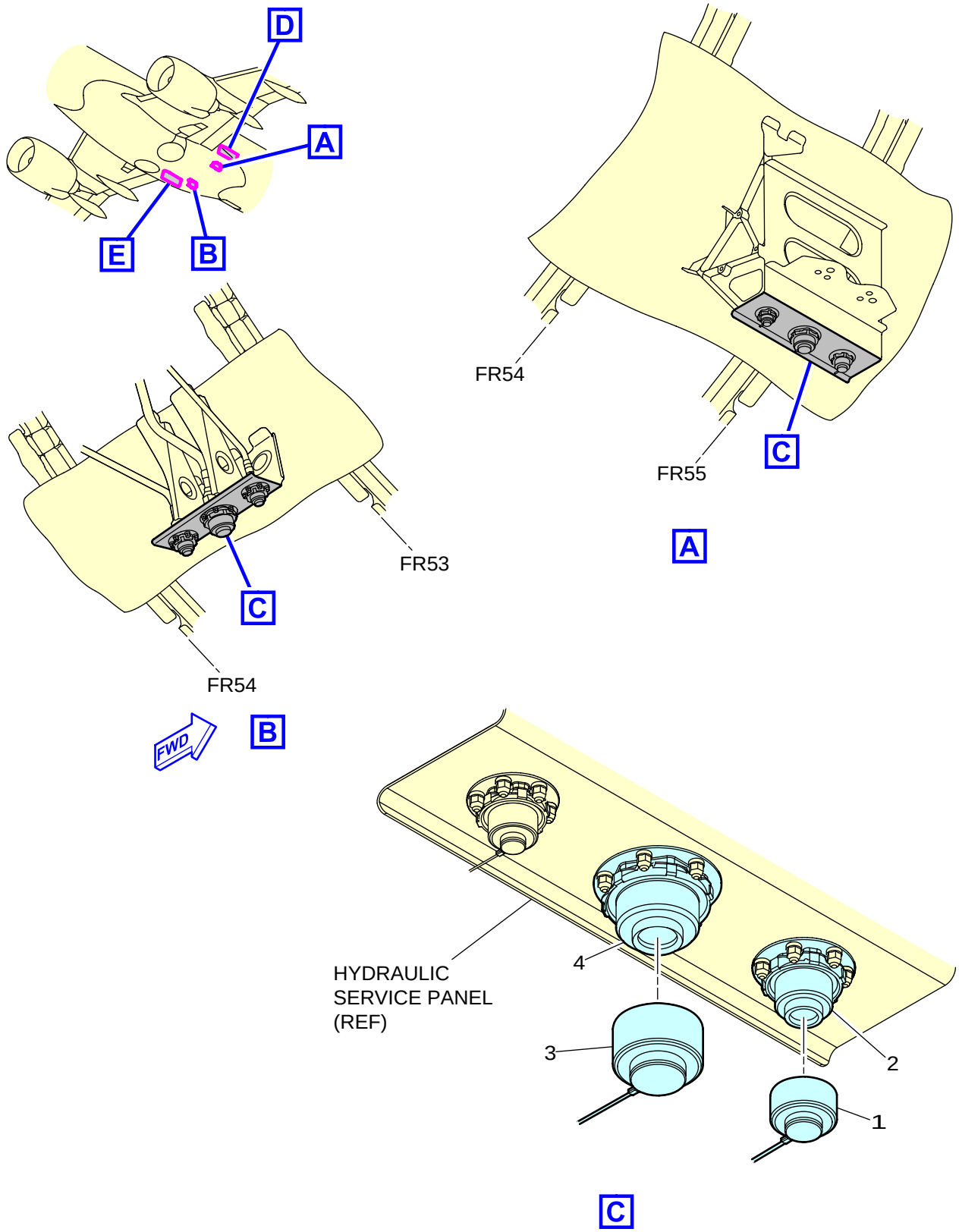

ICN-BD500-A-J121029-C-3AB48-21043-A-001-01

Figure 2 Hydraulic systems No. 1 and No. 2 - Drain other liquid - Option 1

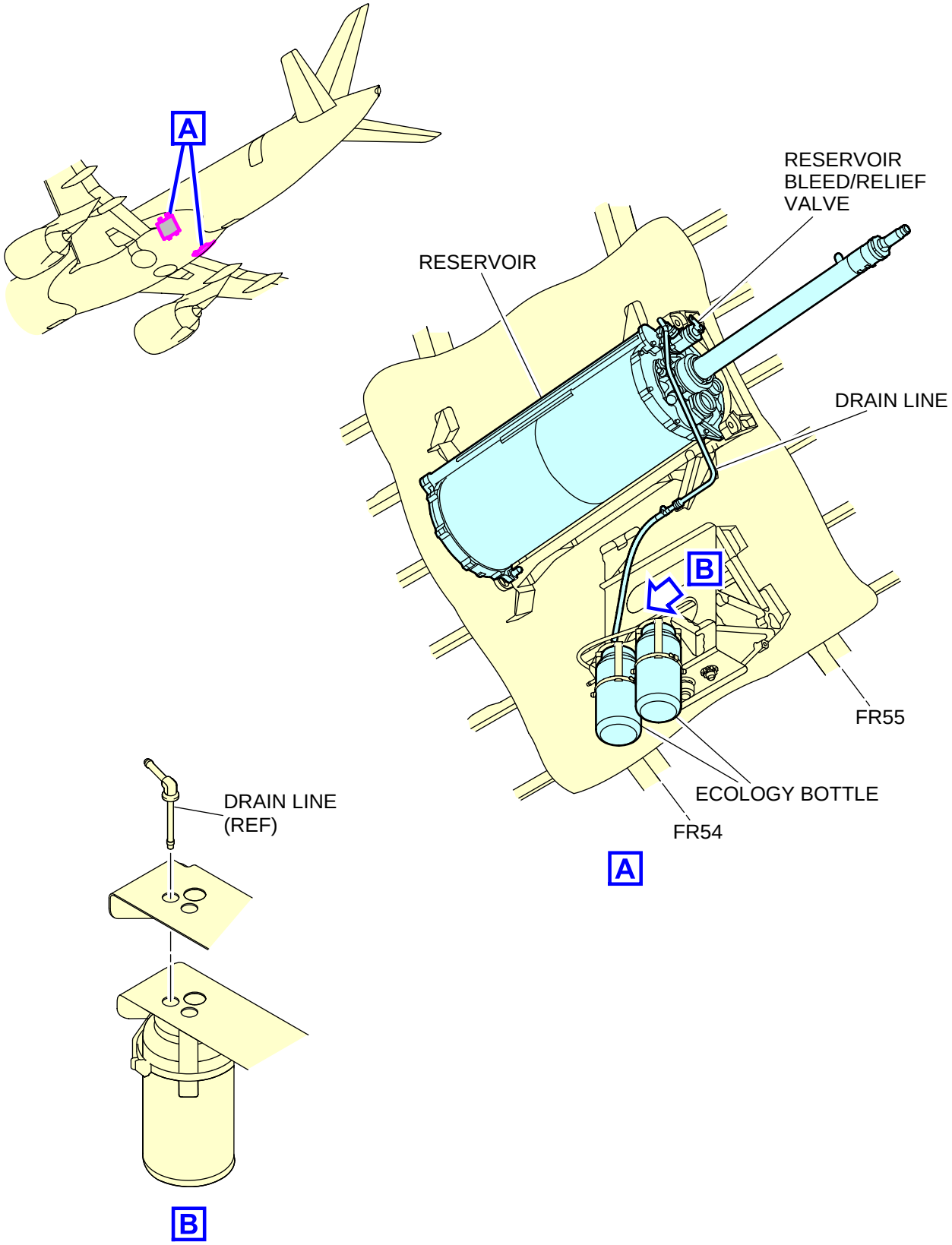

ICN-BD500-A-J121029-A-3AB48-45286-A-001-01

Figure 3 Hydraulic systems No. 1 and No. 2 - Drain other liquid - Option 2

Requirements after job completion

Required conditions

Table 6 Required conditions

Action/Condition	Data Module/Technical publication
Remove all tools, equipment, and unwanted materials, from the work area.	
De-energize the electrical network.	BD500-A-J24-00-00-01AAA-561A-A
Make sure that the access panels are installed. Refer to the access points table above for details.	

Intentionally left blank

Hydraulic systems No. 1 or No. 2 - Bleed

Applicability: 50001-54999, 55001-59999

Table of contents

Page

Hydraulic systems No. 1 or No. 2 - Bleed..... 1
References..... 1
Common information..... 2
Preliminary requirements..... 2
Procedure..... 4
1 Option 1: With Hydraulic Power Unit (HPU) - option recommended..... 4
2 Option 2: Bleed with the Hydraulic system pumps..... 8
Requirements after job completion..... 14

List of tables

Page

1 References..... 1
2 Required conditions..... 3
3 Support equipment..... 3
4 Consumables, materials, and expendables..... 4
5 Spares..... 4
6 Required conditions..... 14

List of figures

Page

1 Hydraulic systems No. 1 and No. 2 - Bleed..... 11
2 Hydraulic systems No. 1 and No. 2 - Bleed..... 12

References

Table 1 References

Data Module/Technical Publication	Title
BD500-A-J24-00-00-01AAA-913G-A	Electrical/Electronic safety precautions - General maintenance safety procedure
BD500-A-J27-00-00-01AAA-913G-A	Flight control safety precautions - General maintenance safety procedure
BD500-A-J29-00-00-00AAA-913G-A	Hydraulic safety precautions - General maintenance safety procedure
BD500-A-J29-00-00-01AAA-913G-A	Hydraulic technical precautions - General maintenance safety procedure
BD500-A-J24-00-00-01AAA-761A-A	Electrical power - General - Energize electrical network
BD500-A-J51-26-00-01AAA-251A-A	Solvent cleaning - Clean with chemical agent
BD500-A-J27-31-01-01AAA-320A-A	Elevator Power Control Unit (PCU) - Operation test
BD500-A-J27-21-01-01AAA-320A-A	Rudder Power Control Unit (PCU) - Operation test

Data Module/Technical Publication	Title
BD500-A-J27-63-01-01AAA-320A-A	Ground Spoiler Control Module (GSCM) - Operation test
BD500-A-J27-65-01-01AAA-320A-A	Multi-Function Spoiler (MFS) Power Control Unit (PCU) - Operation test
BD500-A-J27-50-00-01AAA-320A-A	Flap and slat system - Operation test
BD500-A-J73-21-00-08AAA-320A-A	FADEC system - Thrust Reverser - Operation test (cycling interactive test)
BD500-A-J32-11-00-01AAA-320A-A	Main Landing Gear (MLG) - Operation test
BD500-A-J32-21-00-01AAA-320A-A	Nose Landing Gear (NLG) - Operation test
BD500-A-J32-30-00-00AAA-320A-A	Nose landing gear extension and retraction - Operation test
BD500-A-J27-11-01-01AAA-320A-A	Aileron Power Control Unit (PCU) - Operation test
BD500-A-J32-51-00-01AAA-340A-A	Nose Wheel Steering (NWS) - Function test
BD500-A-J12-10-29-01AAA-562A-A	Hydraulic systems No. 1 or No. 2 - Depressurize hydraulics
BD500-A-J12-10-29-01AAA-210C-A	Hydraulic systems No. 1 or No. 2 - Fill with hydraulic fluid
BD500-A-J29-12-42-01AAA-520A-A	Ecology bottle - Remove procedure
BD500-A-J29-12-42-01AAA-720A-A	Ecology bottle - Install procedure
BD500-A-J29-11-30-01AAA-200B-A	Hydraulic system No. 1 and No. 2 fluid reservoir - Quantity check
BD500-A-J24-00-00-01AAA-561A-A	Electrical power - General - De-Energize electrical network

Common information

This data module gives the procedure to bleed the hydraulic system No. 1 and No. 2 (written as "hydraulic system" in this procedure). The hydraulic systems are installed in Wing To Body Fairing (WTBF). The procedure for the hydraulic system No. 1 is given. Differences for the hydraulic system No. 2 are identified.

Preliminary requirements

Production maintenance data

Zones	195	Aft wing to fuselage fairing, left side
	196	Aft wing to fuselage fairing, right side

	211		Flight compartment, left side
	212		Flight compartment, right side
Access points	195EB	Panel	
	196GB	Panel	

Required conditions

Table 2 Required conditions

Action/Condition	Data Module/Technical publication
Make sure that the aircraft is safe for maintenance.	
Obey all the electrical/electronic safety precautions.	BD500-A-J24-00-00-01AAA-913G-A
Obey all the flight control safety precautions.	BD500-A-J27-00-00-01AAA-913G-A
Obey all the hydraulic safety precautions.	BD500-A-J29-00-00-00AAA-913G-A
Obey all the hydraulic technical precautions.	BD500-A-J29-00-00-01AAA-913G-A
Energize the electrical network.	BD500-A-J24-00-00-01AAA-761A-A
Obey the solvent cleaning standard practices.	BD500-A-J51-26-00-01AAA-251A-A
Make sure that the access panels are removed. Refer to the access points table above for details.	

Support equipment

Table 3 Support equipment

Name	Identification/Reference	Quantity	Remark
Hydraulic ground cart	58311GQ 5833	1	
Container, fluid - 1 US-Gal. (3.8 L)	STD-0078	1	

Consumables, materials, and expendables

Table 4 Consumables, materials, and expendables

Name	Identification/Reference	Quantity	Remark
Cloths, cleaning, low-lint	05-001	AR	
Isopropyl alcohol (IPA)	11-004	AR	

Spares

Table 5 Spares

Name	Identification/Reference	Quantity	Remark
None			

Safety conditions

None

Procedure

1 **Option 1**: With Hydraulic Power Unit (HPU) - option recommended.

1.1 Bleed the hydraulic systems as follows:

Refer to Fig. 1 and Fig. 2 .

1.1.1 Put the container (Commercially available, Pt. No. STD-0078) below the work area.

1.1.2 Bleed the hydraulic system with the Hydraulic Power Unit (HPU) (59603, Pt. No. 58311GQ) as follows:

1.1.2.1 On the hydraulic service panel, do the steps as follows:

1.1.2.1.1 Remove the cap (1) from the pressure quick disconnect coupling (2).

1.1.2.1.2 Connect the HPU (59603, Pt. No. 58311GQ) pressure line to the pressure quick disconnect coupling (2).

1.1.2.1.3 Remove the cap (3) from the return quick disconnect coupling (4).

1.1.2.1.4 Connect the HPU (59603, Pt. No. 58311GQ) return line to the return quick disconnect coupling (4).

CAUTION

Do not pressurize the hydraulic systems with a ground hydraulic power-unit without the return line connected. If the return line must go into a container, make sure the return line is open before you apply pressure. You can cause damage to the hydraulic seals.

1.1.2.2 Set the HPU (59603, Pt. No. 58311GQ) in the open loop mode. Refer to manufacturer instructions.

1.1.2.3 Start the HPU (59603, Pt. No. 58311GQ) . Refer to the manufacturer instructions.

1.1.2.4 On the HPU (59603, Pt. No. 58311GQ) , set the pressure to 300 ±50 psi (2068.44 ±344.74 kPa).

1.1.2.5 Make sure that there is no leakage from the hydraulic plumbing line connections.

1.1.2.6 On the HPU (59603, Pt. No. 58311GQ) , set the pressure to 3000 ±50 psi (20684.40 ±344.74 kPa).

1.1.2.7 Make sure that there is no leakage from the hydraulic plumbing line connections.

CAUTION

Shut down the hydraulic systems No. 1 and No. 2 if the temperature exceeds 205°F (96°C). You can cause damage to the equipment.

1.1.2.8 Get access to the HYD synoptic page.

1.1.2.9 For hydraulic system No. 1, operate the applicable flight controls that follow for 10 complete cycles until the motion becomes smooth, free from jumps, and unusual noises:

Note

Perform bleeding procedure with all three hydraulic systems pressurized to 3000 ± 200 psi (20684.40 ± 1378.96 kPa). Elevator and Rudder are powered hydraulically and electrically. Slowly operate the Elevator and Rudder.

- Elevator. Refer to BD500-A-J27-31-01-01AAA-320A-A.
- Rudder. Refer to BD500-A-J27-21-01-01AAA-320A-A.
- Ground spoiler. Refer to BD500-A-J27-63-01-01AAA-320A-A.
- Multi Function Spoiler (MFS). Refer to BD500-A-J27-65-01-01AAA-320A-A.
- Flap. Refer to BD500-A-J27-50-00-01AAA-320A-A.
- L thrust reverser. Refer to BD500-A-J73-21-00-08AAA-320A-A.
- If maintenance was done on the Main Landing Gear (MLG) and/or Nose Landing Gear (NLG) retraction/extension components, do the applicable operation test:
- For MLG, refer to BD500-A-J32-11-00-01AAA-320A-A
- For NLG, refer to BD500-A-J32-21-00-01AAA-320A-A or BD500-A-J32-30-00-00AAA-320A-A

1.1.2.10 For hydraulic system No. 2, operate the applicable flight controls that follow for 10 complete cycles until the motion becomes smooth, free from jumps, and unusual noises:

Note

Perform bleeding procedure with all three hydraulic systems pressurized to 3000 ±200 psi (20684.40 ±1378.96 kPa). Elevator, Rudder and Aileron are powered hydraulically and electrically. Slowly operate the Elevator, Rudder and Aileron.

- Elevator. Refer to BD500-A-J27-31-01-01AAA-320A-A.
- Rudder. Refer to BD500-A-J27-21-01-01AAA-320A-A.
- Aileron. Refer to BD500-A-J27-11-01-01AAA-320A-A.
- MFS. Refer to BD500-A-J27-65-01-01AAA-320A-A.
- Slat. Refer to BD500-A-J27-50-00-01AAA-320A-A.
- R thrust reverser. Refer to BD500-A-J73-21-00-08AAA-320A-A.
- If maintenance was done on the NLG sterring components, do the applicable system test to cycle the steering:
- Nose Wheel Steering (NWS). Refer to BD500-A-J32-51-00-01AAA-340A-A.

1.1.2.11 Bleed the reservoir bootstrap circuit as follows:

1.1.2.11.1 On the reservoir, repetitively press momentarily the bleed/relief valve to bleed air out of the system while monitoring the ecology bottle to avoid spillage.

1.1.2.11.2 On the reservoir, press the manual depressurization valve.

1.1.2.11.3 On the HPU (59603, Pt. No. 58311GQ) , set the pressure to 2000 ±50 psi (13789.60 ±344.74 kPa).

1.1.2.11.4 On the HYD synoptic page, make sure that the hydraulic pressure is at2000 ±50 psi (13789.60 ±344.74 kPa).

1.1.2.11.5 On the reservoir, repetitively press momentarily the bleed/relief valve to bleed air out of the system while monitoring the ecology bottle to avoid spillage.

1.1.2.11.6 On the HPU (59603, Pt. No. 58311GQ) , set the pressure to 3000 ±50 psi (20684.40 ±344.74 kPa).

1.1.2.11.7 On the HYD synoptic page, make sure that the hydraulic pressure is at 3000 ±50 psi (20684.40 ±344.74 kPa).

1.1.2.11.8 Do Step 1.1.2.9 .

1.1.2.11.9 On the reservoir, repetitively press momentarily the bleed/relief valve to bleed air out of the system while monitoring the ecology bottle to avoid spillage.

1.1.2.12 Do Step 1.1.2.11.1 for three times.

Note

If air still present on the system (visible bubble in the line to ecology bottle), it is recommended to continue above procedure until no air is present in the line during bleeding.

1.1.2.13 Depressurize the hydraulic system No. 1 and No. 2 with hydraulic ground cart (Option 2). Refer to BD500-A-J12-10-29-01AAA-562A-A.

1.1.2.14 On the hydraulic service panel, do the steps as follows:

1.1.2.14.1 Disconnect the HPU (59603, Pt. No. 58311GQ) pressure line from the pressure quick disconnect coupling (2).

1.1.2.14.2 Install the cap (1) on the pressure quick disconnect coupling (2).

1.1.2.14.3 Disconnect the HPU (59603, Pt. No. 58311GQ) return line from the return quick disconnect coupling (4).

1.1.2.14.4 Install the cap (3) on the return quick disconnect coupling (4).

2 **Option 2**: Bleed with the Hydraulic system pumps.

2.1 Bleed the hydraulic system with the aircraft pumps as follows:

CAUTION

Do not operate the Alternating Current Motor Pump (ACMP) or Engine Driven Pump (EDP) if hydraulic reservoir level is below the lower limit given in the servicing placard. You can cause damage to the pump.

2.1.1 Fill the hydraulic system No. 1 and No. 2. Refer to BD500-A-J12-10-29-01AAA-210C-A.

2.1.2 On the visual indicator, monitor and record the hydraulic fluid level.

2.1.3 On the HYD synoptic page, monitor and record the hydraulic fluid level.

2.1.4 Make sure that the hydraulic fluid level value of the visual indicator is with in 5% of the HYD synoptic page value.

2.1.5 On the HYD control panel, turn the following switches to ON.

- HYD2 2B
- HYD 1 PTU.

2.1.6 After 10 seconds, on the HYD synoptic page, make sure that the hydraulic pressure increases.

2.1.7 After 30 seconds, make sure that the hydraulic pressure becomes stable at 3000 ±50 psi (20684.40 ±344.74 kPa).

2.1.8 On the reservoir, repetitively press momentarily the bleed/relief valve to bleed air out of the system while monitoring the ecology bottle to avoid spillage.

2.1.8.1 Drain the ecology bottles as required to avoid spillage.

2.1.8.2 Remove the ecology bottles. Refer to BD500-A-J29-12-42-01AAA-520A-A.

2.1.8.3 Empty the fluid from the ecology bottles.

2.1.8.4 Install the ecology bottles. Refer to BD500-A-J29-12-42-01AAA-720A-A

Note

Alternating Current Motor Pump (ACMP) shall run for approximately 5 minutes prior next step.

Note

If air still present on the system (visible bubble in the line to ecology bottle), it is recommended to continue above procedure until no air is present in the line during bleeding.

2.1.9 For hydraulic system No. 1, operate the applicable flight controls that follow for 10 complete cycles until the motion becomes smooth, free from jumps, and unusual noises:

Note

Perform bleeding procedure with all three hydraulic systems pressurized to 3000 ±200 psi (20684.40 ±1378.96 kPa). Elevator and Rudder are powered hydraulically and electrically. Slowly operate the Elevator and Rudder.

- Elevator. Refer to BD500-A-J27-31-01-01AAA-320A-A.
- Rudder. Refer to BD500-A-J27-21-01-01AAA-320A-A.
- Ground spoiler. Refer to BD500-A-J27-63-01-01AAA-320A-A.
- MFS. Refer to BD500-A-J27-65-01-01AAA-320A-A.
- Flap. Refer to BD500-A-J27-50-00-01AAA-320A-A.
- L thrust reverser. Refer to BD500-A-J73-21-00-08AAA-320A-A.
- If maintenance was done on the MLG and/or NLG retraction/extension components, do the applicable operation test:
- For MLG, refer to BD500-A-J32-11-00-01AAA-320A-A
- For NLG, refer to BD500-A-J32-21-00-01AAA-320A-A or BD500-A-J32-30-00-00AAA-320A-A

2.1.10 For hydraulic system No. 2, operate the applicable flight controls that follow for 10 complete cycles until the motion becomes smooth, free from jumps, and unusual noises:

Note

Perform bleeding procedure with all three hydraulic systems pressurized to 3000 ±200 psi (20684.40 ±1378.96 kPa). Elevator, Rudder and Aileron are powered hydraulically and electrically. Slowly operate the Elevator, Rudder and Aileron.

- Elevator. Refer to BD500-A-J27-31-01-01AAA-320A-A.
- Rudder. Refer to BD500-A-J27-21-01-01AAA-320A-A.
- Aileron. Refer to BD500-A-J27-11-01-01AAA-320A-A.
- MFS. Refer to BD500-A-J27-65-01-01AAA-320A-A.
- Slat. Refer to BD500-A-J27-50-00-01AAA-320A-A.
- R thrust reverser. Refer to BD500-A-J73-21-00-08AAA-320A-A.
- If maintenance was done on the NLG sterring components, do the applicable system test to cycle the steering:
- NWS. Refer to BD500-A-J32-51-00-01AAA-340A-A.

2.1.11 Depressurize the hydraulic system No. 1 and No. 2 with aircraft pumps (Option 1). Refer to BD500-A-J12-10-29-01AAA-562A-A.

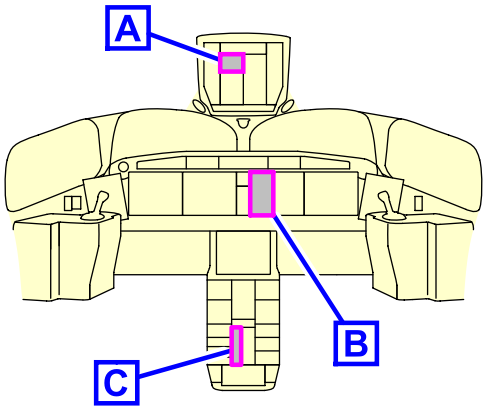

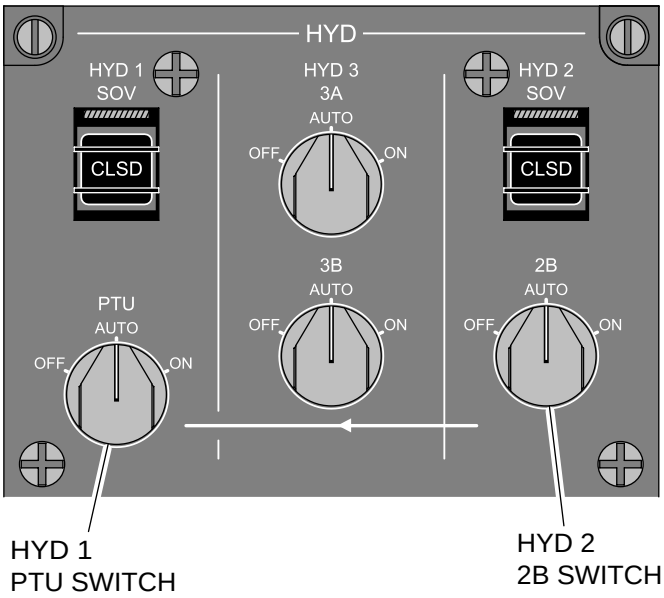

HYD CONTROL PANEL

A

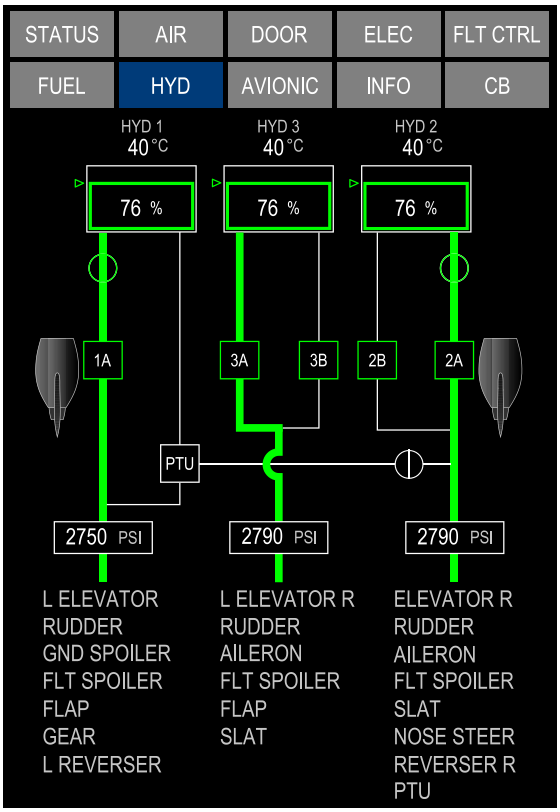

HYDRAULIC SYNOPTIC PAGE

B

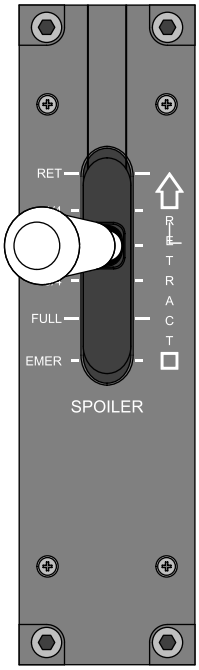

FLIGHT SPOILER CONTROL PANEL

C

ICN-BD500-A-J121029-C-3AB48-21042-A-002-01

Figure 1 Hydraulic systems No. 1 and No. 2 - Bleed

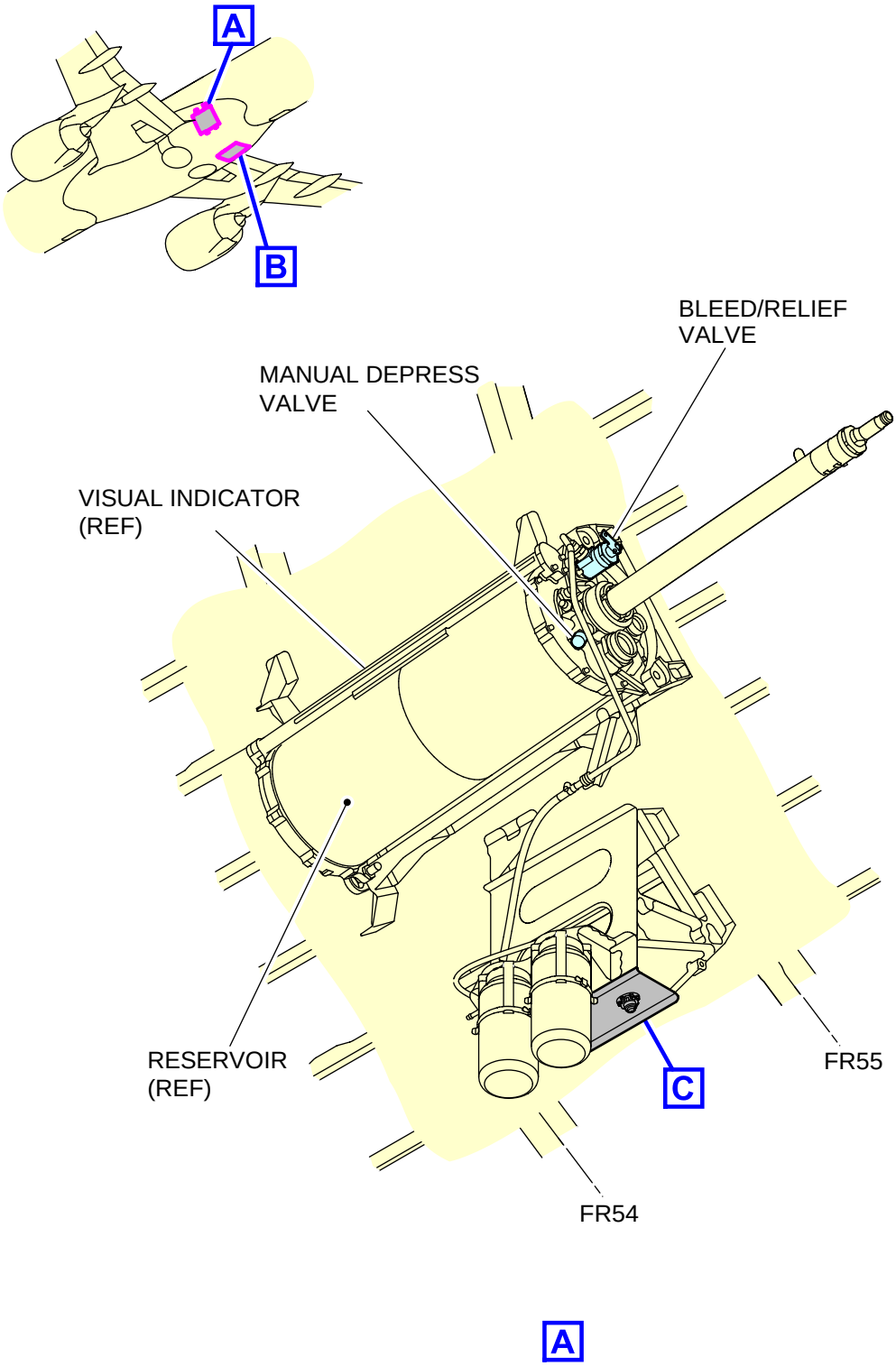

ICN-BD500-A-J121029-C-3AB48-21170-A-001-01

Figure 2 Hydraulic systems No. 1 and No. 2 - Bleed - (Sheet 1 of 2)

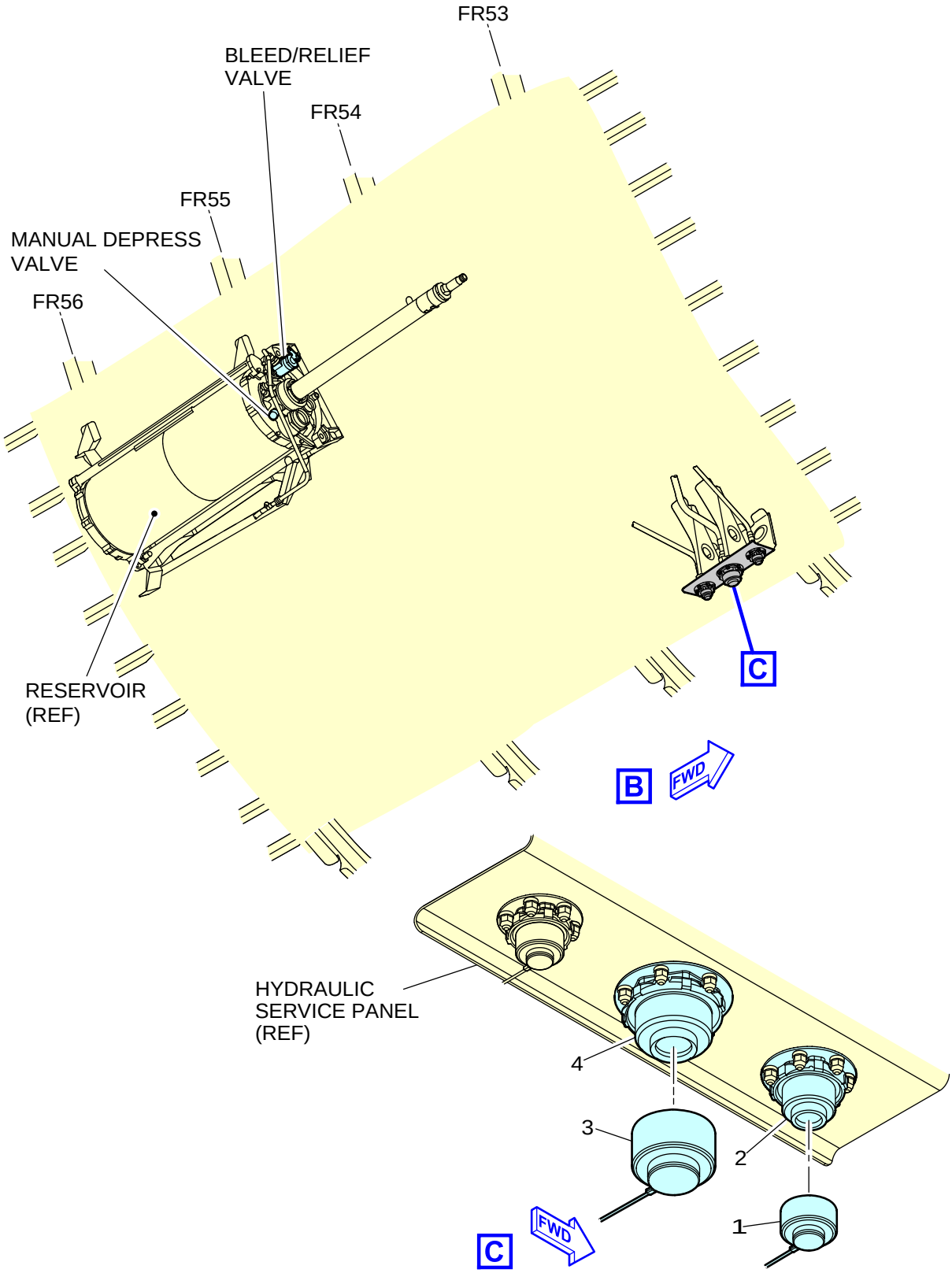

ICN-BD500-A-J121029-C-3AB48-21280-A-003-01

Figure 2 Hydraulic systems No. 1 and No. 2 - Bleed - (Sheet 2 of 2)

Requirements after job completion

Required conditions

Table 6 Required conditions

Action/Condition	Data Module/Technical publication
Remove all tools, equipment, and unwanted materials from the work area.	
Do the hydraulic fluid reservoir quantity check of the hydraulic system No. 1 or No. 2.	BD500-A-J29-11-30-01AAA-200B-A
De-energize the electrical network.	BD500-A-J24-00-00-01AAA-561A-A
Make sure that the access panels are installed. Refer to the access points table above for details.	

Hydraulic systems No. 1 or No. 2 - Depressurize hydraulics

Applicability: 50001-54999, 55001-59999

Table of contents

Page

Hydraulic systems No. 1 or No. 2 - Depressurize hydraulics..... 1
References..... 1
Common information..... 2
Preliminary requirements..... 2
Procedure..... 4
1 Option 1: Depressurize the hydraulic system No. 1 and/or No. 2 with aircraft pumps..... 4
2 Option 2: Depressurize the hydraulic system 1 and/or 2 with hydraulic ground cart.. 4
Requirements after job completion..... 9

List of tables

Page

1 References..... 1
2 Required conditions..... 2
3 Support equipment..... 3
4 Consumables, materials, and expendables..... 3
5 Spares..... 3
6 Required conditions..... 9

List of figures

Page

1 Hydraulic systems No. 1 and No. 2 - Depressurize hydraulics..... 6
2 Hydraulic systems No. 1 and No. 2 - Depressurize hydraulics..... 7

References

Table 1 References

Data Module/Technical Publication	Title
BD500-A-J24-00-00-01AAA-561A-A	Electrical power - General - De-Energize electrical network
BD500-A-J24-00-00-01AAA-761A-A	Electrical power - General - Energize electrical network
BD500-A-J24-00-00-01AAA-913G-A	Electrical/Electronic safety precautions - General maintenance safety procedure
BD500-A-J27-00-00-01AAA-913G-A	Flight control safety precautions - General maintenance safety procedure
BD500-A-J29-00-00-01AAA-913G-A	Hydraulic technical precautions - General maintenance safety procedure
BD500-A-J51-26-00-01AAA-251A-A	Solvent cleaning - Clean with chemical agent

Common information

This data module gives the procedure to depressurize the hydraulic system No. 1 and No. 2 (written as "hydraulic system" in this procedure). The hydraulic systems are installed in the Wing To Body Fairing (WTBF).

Preliminary requirements

Production maintenance data

Zones	211		Flight compartment, left side
	212		Flight compartment, right side
	195		Aft wing to fuselage fairing, left side
	196		Aft wing to fuselage fairing, right side
Access points	195CB	Door	
	195DB	Door	
	196AB	Door	
	196FB	Door	

Required conditions

Table 2 Required conditions

Action/Condition	Data Module/Technical publication
Make sure that the aircraft is safe for maintenance.	
Obey all the electrical/electronic safety precautions.	BD500-A-J24-00-00-01AAA-913G-A
Obey all the flight control safety precautions.	BD500-A-J27-00-00-01AAA-913G-A
Obey all the hydraulic technical precautions.	BD500-A-J29-00-00-01AAA-913G-A
Obey the solvent cleaning standard practices.	BD500-A-J51-26-00-01AAA-251A-A
Make sure that the electronic circuit breakers that follow are OUT on the circuit breaker synoptic page:	

Name	CB Number/Location
EDP 1A D-PRESS	CDC1-5-11
PTU SEL VLV	CDC1-9-12

Action/Condition	Data Module/Technical publication	
	Name	CB Number/Location
	EDP 2A D-PRESS	CDC2-5-11
	ACMP 2B	EPC1-AC-2B
Energize the electrical network.	BD500-A-J24-00-00-01AAA-761A-A	
Put warning placards on the HYD PTU and 2B switches to give a warning not to pressurize the hydraulic systems No. 1 and No. 2.		
Make sure that the access doors are open. Refer to the access points table above for details.		

Support equipment

Table 3 Support equipment

Name	Identification/Reference	Quantity	Remark
Hydraulic ground cart	58311GQ 5833	1	

Consumables, materials, and expendables

Table 4 Consumables, materials, and expendables

Name	Identification/Reference	Quantity	Remark
Cloths, cleaning, low-lint	05-001	AR	
Isopropyl alcohol (IPA)	11-004	AR	

Spares

Table 5 Spares

Name	Identification/Reference	Quantity	Remark
None			

Safety conditions

None

Procedure

1 **Option 1**: Depressurize the hydraulic system No. 1 and/or No. 2 with aircraft pumps.

1.1 Depressurize the hydraulic systems as follows:

Refer to Fig. 1 and Fig. 2 .

1.1.1 Depressurize the applicable hydraulic system with the aircraft pumps as follows:

1.1.1.1 Get access to the HYD synoptic page.

1.1.1.2 On the HYD control panel, turn the PTU and 2B switches to OFF.

1.1.1.3 On the HYD synoptic page, make sure that the hydraulic pressure decreases to 0 psi (0 kPa).

Note

There will be very small hydraulic pressure if the system is not pressurized for approximately 12 hours.

If hydraulic system needs to be opened or hydraulic component replacement is required, continue with the following step.

1.1.1.4 Release the remaining hydraulic pressure from the bootstrap accumulator of hydraulic system as follows:

1.1.1.4.1 On the reservoir, turn and hold the manual depress valve for approximately 20 seconds.

2 **Option 2**: Depressurize the hydraulic system 1 and/or 2 with hydraulic ground cart.

2.1 Depressurize the applicable hydraulic system with the Hydraulic Power Unit (HPU) (59603, Pt. No. 58311GQ) as follows:

2.1.1 If necessary, on the hydraulic service panel, do the steps that follow:

2.1.1.1 Remove the cap (3) from the return quick disconnect coupling (4).

2.1.1.2 Connect the return line from the HPU (59603, Pt. No. 58311GQ) to the return quick disconnect coupling (4).

2.1.1.3 Remove the cap (1) from the pressure quick disconnect coupling (2).

2.1.1.4 Connect the pressure line from the HPU (59603, Pt. No. 58311GQ) to the pressure quick disconnect coupling (2).

2.1.1.5 If required, use a clean cloth (05-001) to clean the hydraulic fluid leakage from the work area with Isopropyl Alcohol (IPA) (11-004) .

2.1.2 On the HPU (59603, Pt. No. 58311GQ) , slowly decrease the hydraulic pressure. Refer to the manufacturer instructions.

2.1.3 On the HYD synoptic page, make sure that the hydraulic pressure decreases to 0 psi (0 kPa).

Note

There will be very small hydraulic pressure if the system is not pressurized for approximately 12 hours.

2.1.4 Shutdown the HPU (59603, Pt. No. 58311GQ) . Refer to the manufacturer instructions.

2.1.5 On the hydraulic service panel, do the steps that follow:

2.1.5.1 Disconnect the pressure line from the pressure quick disconnect coupling (2).

2.1.5.2 Install the cap (1) on the pressure quick disconnect coupling (2)

2.1.5.3 Disconnect the return line from the return quick disconnect coupling (4).

2.1.5.4 Install the cap (3) on the return quick disconnect coupling (4).

Note

If hydraulic system needs to be opened or hydraulic component replacement is required, continue with the following step.

2.1.5.5 Release the remaining hydraulic pressure from the bootstrap accumulator of hydraulic system as follow:

2.1.5.5.1 On the reservoir, turn and hold the manual depress valve for approximately 20 seconds.

2.1.5.6 If required, use a cloth (05-001) to clean the hydraulic fluid leakage from the work area with IPA (11-004) .

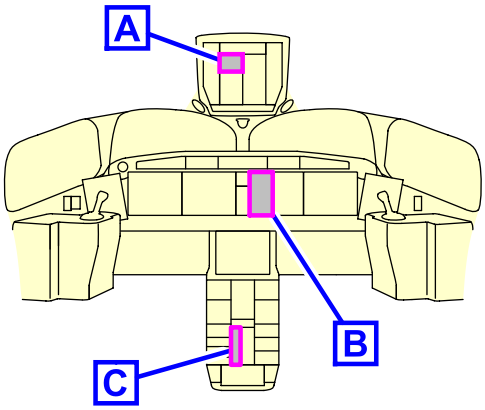

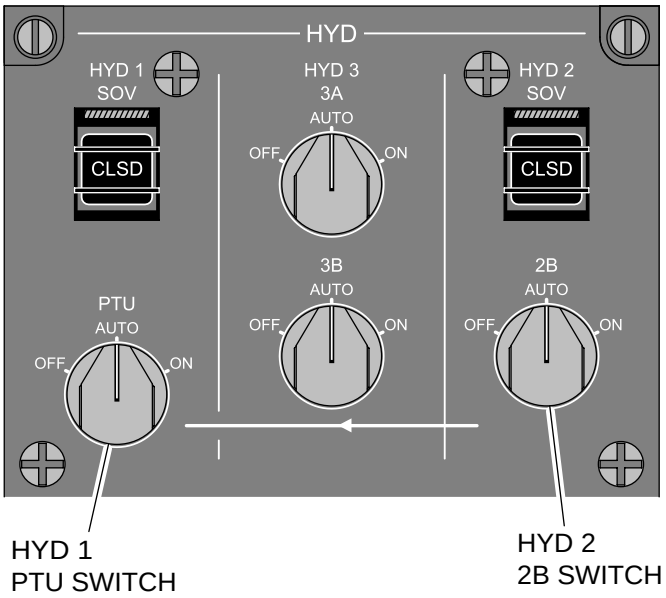

HYD CONTROL PANEL

A

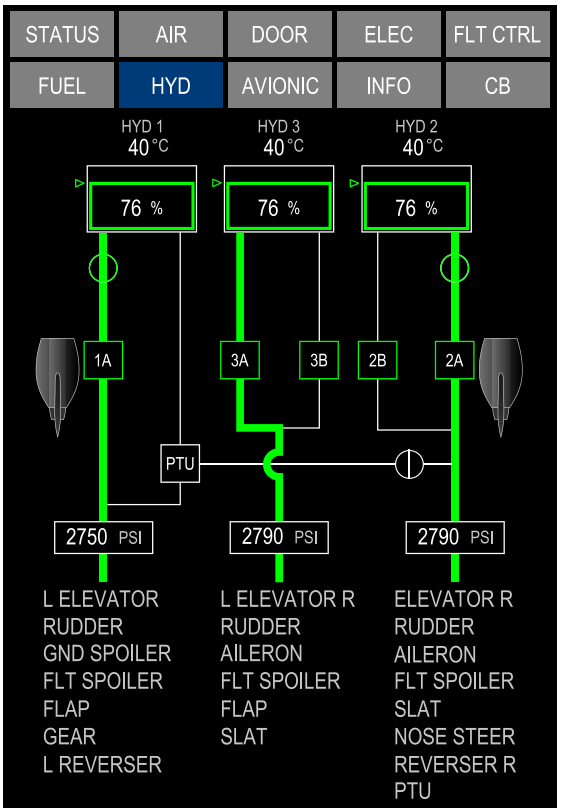

HYDRAULIC SYNOPTIC PAGE

B

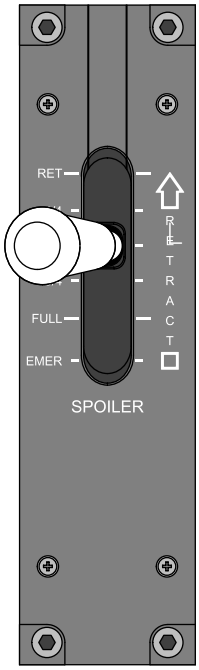

FLIGHT SPOILER CONTROL PANEL

C

ICN-BD500-A-J121029-C-3AB48-21042-A-002-01

Figure 1 Hydraulic systems No. 1 and No. 2 - Depressurize hydraulics

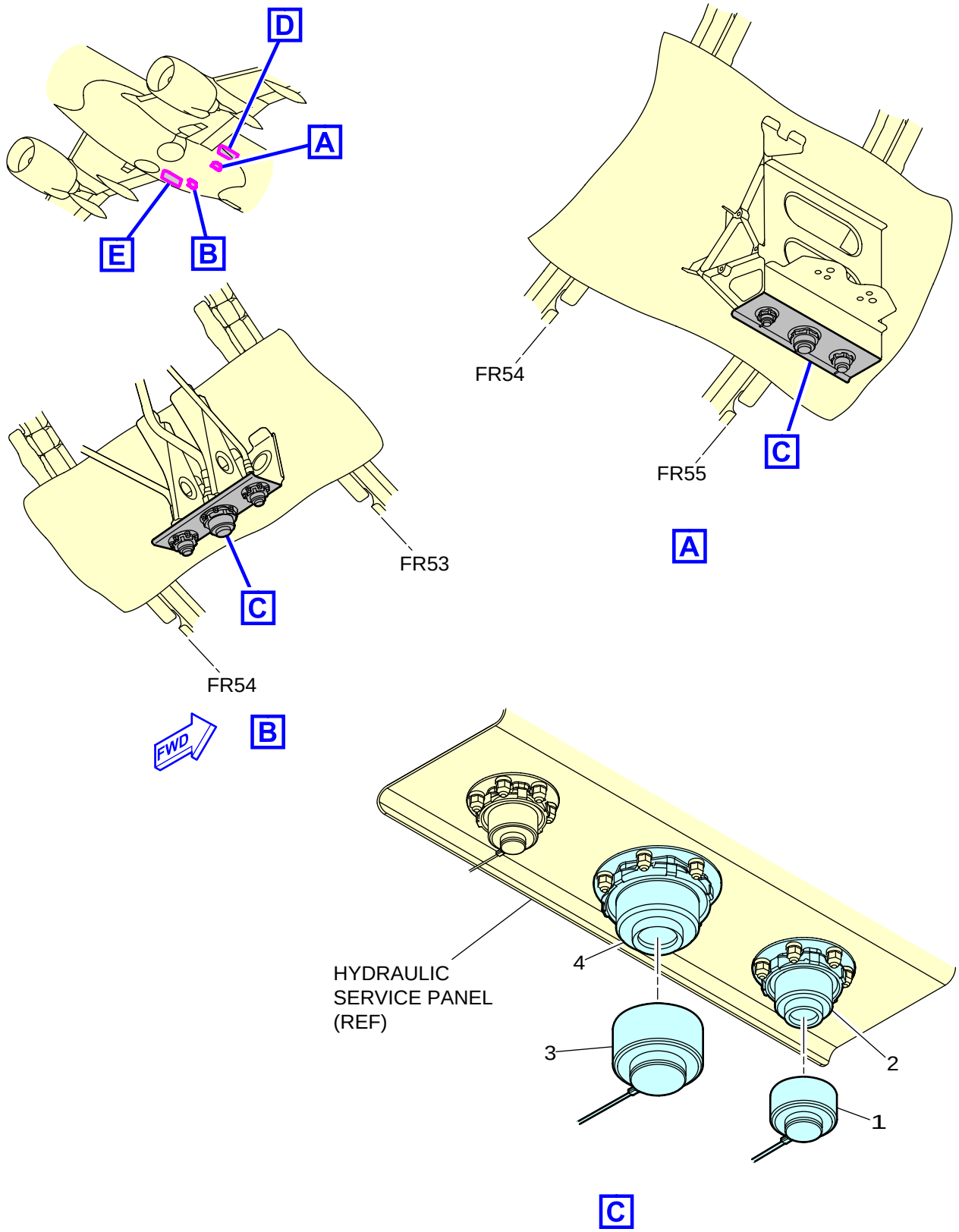

ICN-BD500-A-J121029-C-3AB48-21043-A-001-01

Figure 2 Hydraulic systems No. 1 and No. 2 - Depressurize hydraulics - (Sheet 1 of 2)

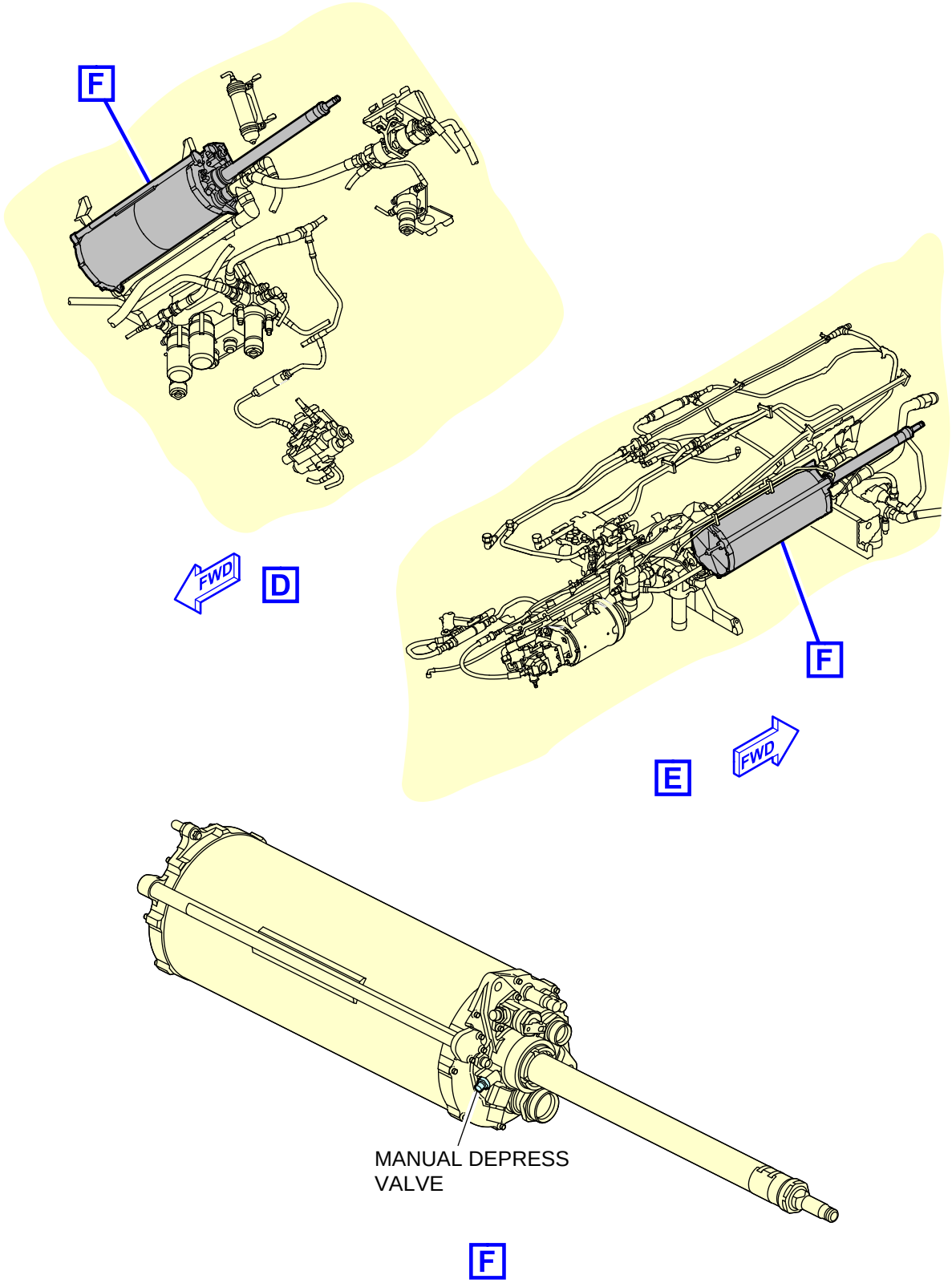

ICN-BD500-A-J121029-C-3AB48-20940-A-001-01

Figure 2 Hydraulic systems No. 1 and No. 2 - Depressurize hydraulics - (Sheet 2 of 2)

Requirements after job completion

Required conditions

Table 6 Required conditions

Action/Condition	Data Module/Technical publication
Remove all tools, equipment, and unwanted material from the work area.	
Make sure that the access doors are closed. Refer to the access points table above for details.	
De-energize the electrical network.	BD500-A-J24-00-00-01AAA-561A-A

Intentionally left blank

A220

Hydraulic system No. 3 - Drain Hydraulic

Applicability: 50001-54999, 55001-59999

Table of contents

Page

Hydraulic system No. 3 - Drain Hydraulic..... 1
References..... 1
Common information..... 2
Preliminary requirements..... 2
Procedure..... 3
Requirements after job completion..... 9

List of tables

Page

1 References..... 1
2 Required conditions..... 2
3 Support equipment..... 3
4 Consumables, materials, and expendables..... 3
5 Spares..... 3
6 Required conditions..... 9

List of figures

Page

1 Hydraulic system No. 3 - Drain other liquid - Option 1..... 6
2 Hydraulic system No. 3 - Drain other liquid - Option 1..... 7
3 Hydraulic system No. 3 - Drain other liquid - Option 2..... 8

References

Table 1 References

Data Module/Technical Publication	Title
BD500-A-J12-10-29-02AAA-562A-A	Hydraulic system No. 3 - Depressurize hydraulics
BD500-A-J24-00-00-01AAA-561A-A	Electrical power - General - De-Energize electrical network
BD500-A-J24-00-00-01AAA-761A-A	Electrical power - General - Energize electrical network
BD500-A-J24-00-00-01AAA-913G-A	Electrical/Electronic safety precautions - General maintenance safety procedure
BD500-A-J27-00-00-01AAA-913G-A	Flight control safety precautions - General maintenance safety procedure
BD500-A-J29-00-00-00AAA-913G-A	Hydraulic safety precautions - General maintenance safety procedure
BD500-A-J29-00-00-01AAA-913G-A	Hydraulic technical precautions - General maintenance safety procedure
BD500-A-J29-12-30-01AAA-200B-A	Hydraulic fluid reservoir system No. 3 - Quantity check

Common information

This data module gives the procedure to drain the hydraulic system No. 3 (written as "hydraulic system" in this procedure). The hydraulic system is installed in the Aft Equipment Bay (AEB).

Preliminary requirements

Production maintenance data

Zones	211		Flight compartment, left side
	212		Flight compartment, right side
	312		Aft fuselage, right side
Access points	867	Door	

Required conditions

Table 2 Required conditions

Action/Condition	Data Module/Technical publication
Make sure that the aircraft is safe for maintenance.	
Obey the electrical/electronic safety precautions.	BD500-A-J24-00-00-01AAA-913G-A
Obey all the flight control safety precautions.	BD500-A-J27-00-00-01AAA-913G-A
Obey the hydraulic safety precautions.	BD500-A-J29-00-00-00AAA-913G-A
Obey the hydraulic technical precautions.	BD500-A-J29-00-00-01AAA-913G-A
Depressurize the hydraulic system No. 3.	BD500-A-J12-10-29-02AAA-562A-A
Energize the electrical network.	BD500-A-J24-00-00-01AAA-761A-A
Make sure that the access door is open. Refer to the access points table above for details.	

Support equipment

Table 3 Support equipment

Name	Identification/Reference	Quantity	Remark
Hydraulic ground cart	58311GQ 5833	1	
Fluid container	STD-0079	1	

Consumables, materials, and expendables

Table 4 Consumables, materials, and expendables

Name	Identification/Reference	Quantity	Remark
Cloths, cleaning, low-lint	05-001	AR	
Isopropyl alcohol (IPA)	11-004	AR	

Spares

Table 5 Spares

Name	Identification/Reference	Quantity	Remark
None			

Safety conditions

None

Procedure

1 Drain option 1 - Drain the hydraulic system with a hydraulic power unit (59603, Pt. No. 58311GQ) as follows:

Refer to Fig. 1 and Fig. 2 .

Note

This option is recommended when the need to empty completely the reservoir is required.

1.1 Make sure that the reservoir of the ground hydraulic power unit (59603, Pt. No. 58311GQ) has the capacity to contain the hydraulic system reservoir fluid.

1.2 On the hydraulic service panel, do as follows:

1.2.1 Remove the cap (1) from the return quick disconnect coupling (2).

1.2.2 Connect the hydraulic power unit (59603, Pt. No. 58311GQ) return line to the return quick disconnect coupling (2).

1.2.3 Remove the cap (3) from the pressure quick disconnect coupling (4).

1.2.4 Connect the hydraulic power unit (59603, Pt. No. 58311GQ) pressure line to the pressure quick disconnect coupling (4).

1.2.5 If required, use a cloth (05-001) to clean the leaked hydraulic fluid from the work area with isopropyl alcohol(11-004) .

CAUTION

Do not pressurize the hydraulic systems with a ground hydraulic power-unit without the return line connected. If the return line must go into a container, make sure the return line is open before you apply pressure. You can cause damage to the hydraulic seals.

1.3 Set the hydraulic power unit (59603, Pt. No. 58311GQ) in the open loop mode. Refer to manufacturer instructions.

1.4 Start the hydraulic power unit (59603, Pt. No. 58311GQ) . Refer to the manufacturer instructions.

1.5 On the hydraulic power unit (59603, Pt. No. 58311GQ) , set the pressure to 3000 ±50 psi (20684.40 ±344.83 kPa).

1.6 On the indicator (5), make sure that the pressure increases.

1.7 Get access to HYD synoptic page.

1.8 On the HYD synoptic page, make sure that the hydraulic pressure becomes stable at 3000 ±50 psi (20684.40 ±344.83 kPa).

1.9 On the HYD synoptic page, make sure that the hydraulic fluid level is 0%.

1.10 On the Hydraulic Power Unit (HPU), slowly decrease the pressure. Refer to the manufacturer instructions.

1.11 On the HYD synoptic page, make sure that the pressure of the hydraulic system decrease to 0 psi (0 kPa).

1.12 On the indicator (5), make sure that the pressure decreases.

1.13 Shutdown the hydraulic power unit (59603, Pt. No. 58311GQ) .

1.14 Depressurize the hydraulic system No. 3. Refer to BD500-A-J12-10-29-02AAA-562A-A.

1.15 On the HYD synoptic page, make sure that the hydraulic fluid level is 0%.

1.16 On the reservoir, make sure that the visual level indicator shows 0%.

1.17 On the hydraulic service panel, do as follows:

1.17.1 Disconnect the hydraulic power unit (59603, Pt. No. 58311GQ) pressure line from the pressure quick disconnect coupling (4).

1.17.2 Install the cap (3) on the pressure quick disconnect coupling (4).

1.17.3 Disconnect the hydraulic power unit (59603, Pt. No. 58311GQ) return line from the return quick disconnect coupling (2).

1.17.4 Install the cap (1) on the return quick disconnect coupling (2).

1.18 If required, use a cloth (05-001) to clean the leaked hydraulic fluid from the work area with isopropyl alcohol(11-004) .

2 Drain option 2 - Drain the applicable hydraulic system with the reservoir manual bleed/ relief valve as follows:

Note

This option is recommended when there is an overfill condition and fluid is required to be drain from the reservoir to bring it to the operational level limits.

Refer to Fig. 3 .

2.1 Disconnect the manual reservoir bleed/relief valve drain line at the ecology bottle connection to collect the fluid in a container (Commercially available, Pt. No. STD-0079) or use the ecology bottle to drain the hydraulic fluid.

2.2 Open the manual reservoir bleed/relief valve to supply a smooth flow of fluid.

2.3 Drain fluid in the container (Commercially available, Pt. No. STD-0079) or the ecology bottle.

2.4 Close the manual reservoir bleed/relief valve.

2.5 Connect the manual reservoir bleed/relief valve drain line at the ecology bottle connection or drain the ecology bottle.

2.6 If required, use a cloth (05-001) to clean the hydraulic fluid leakage from the work area with isopropyl alcohol (11-004) .

2.7 Do the applicable hydraulic fluid reservoir quantity check for system 3, refer to BD500-A-J29-12-30-01AAA-200B-A.

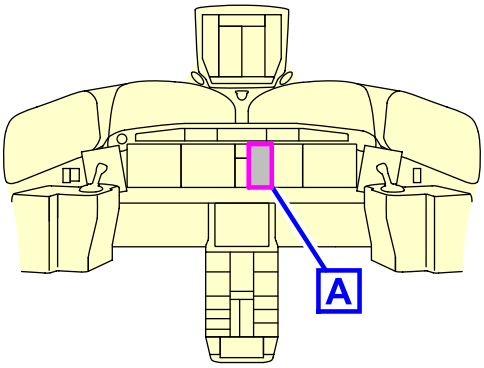

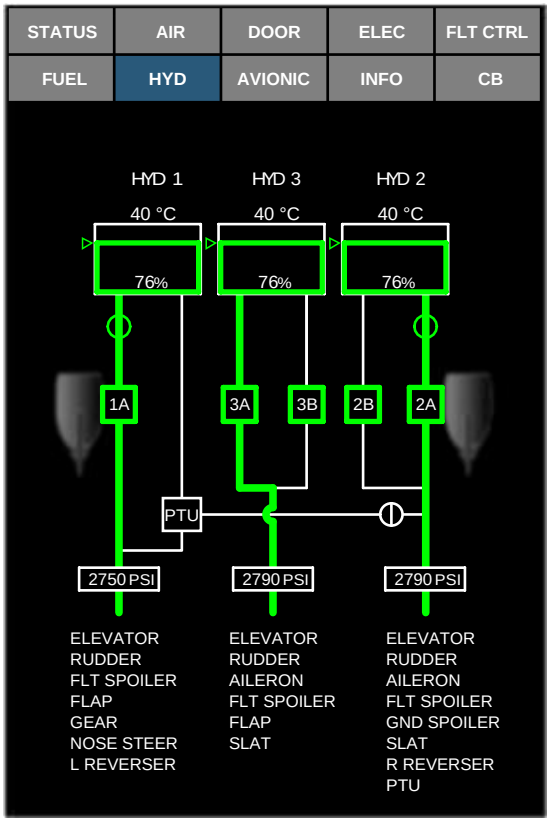

HYDRAULIC SYNOPTIC PAGE

A

ICN-BD500-A-J121029-C-3AB48-21031-A-001-01

Figure 1 Hydraulic system No. 3 - Drain other liquid - Option 1

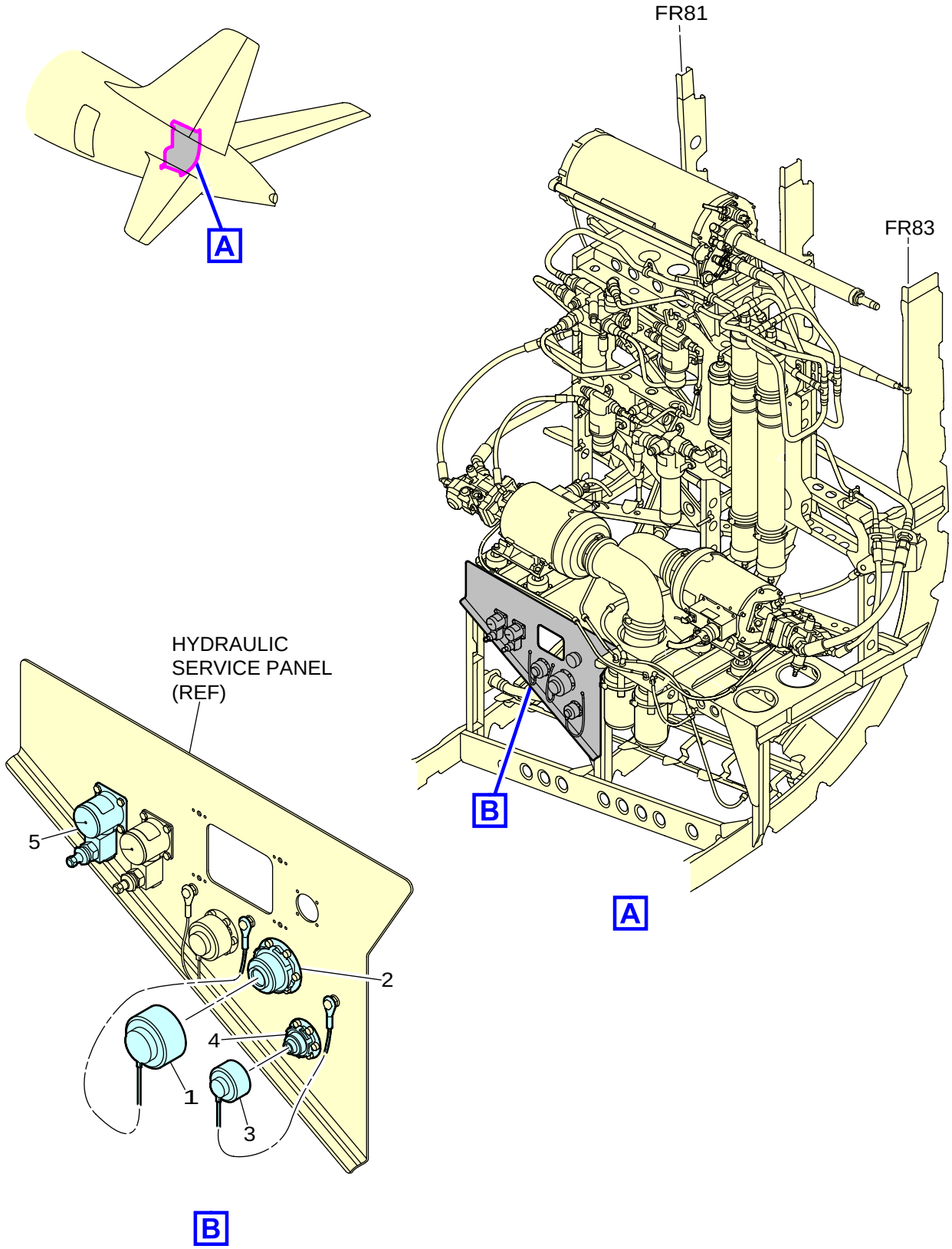

ICN-BD500-A-J121029-C-3AB48-21032-A-002-01

Figure 2 Hydraulic system No. 3 - Drain other liquid - Option 1

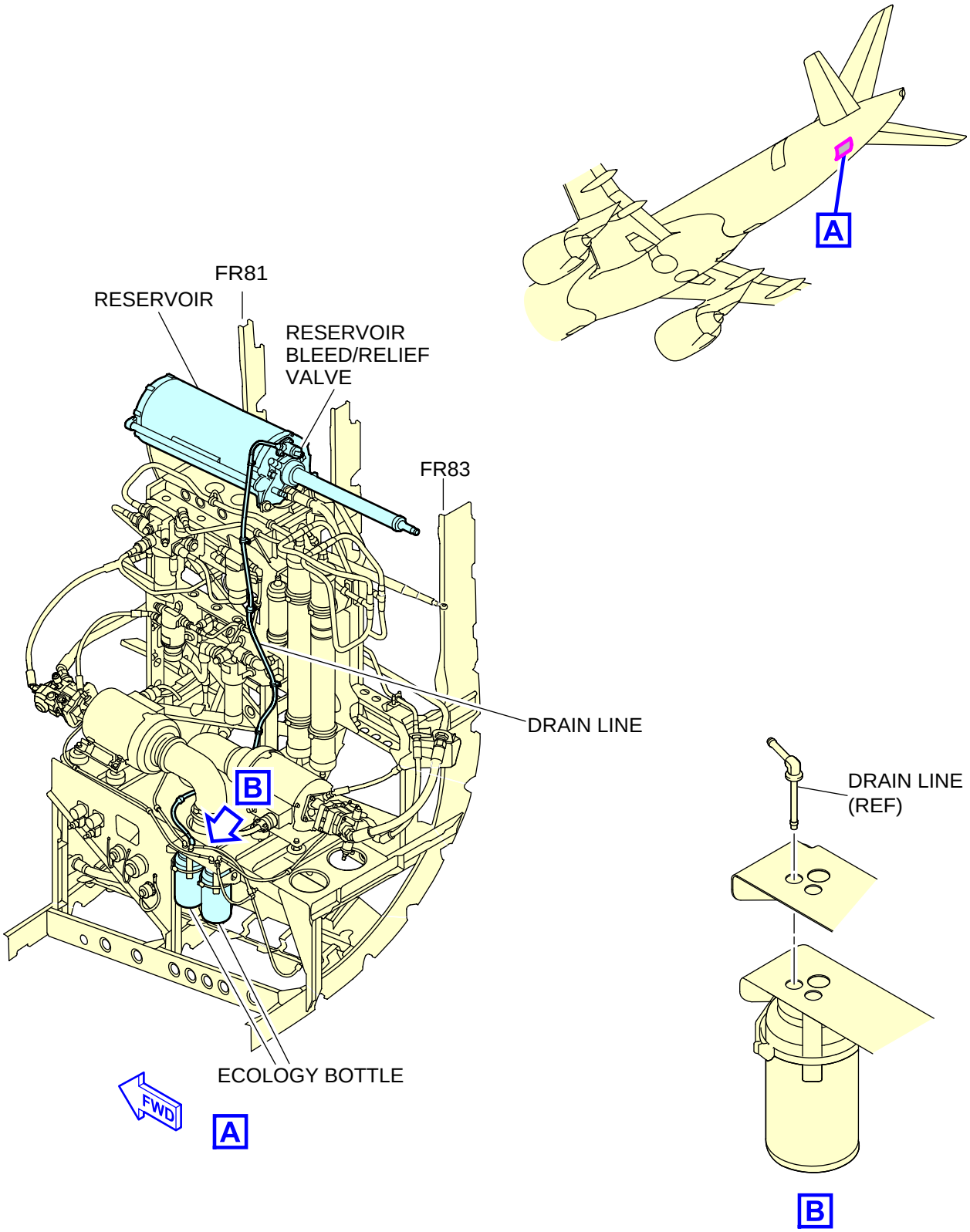

ICN-BD500-A-J121029-A-3AB48-45287-A-001-01

Figure 3 Hydraulic system No. 3 - Drain other liquid - Option 2

Requirements after job completion

Required conditions

Table 6 Required conditions

Action/Condition	Data Module/Technical publication
Remove all tools, equipment, and unwanted materials from the work area.	
De-energize the electrical network.	BD500-A-J24-00-00-01AAA-561A-A
Make sure that the access door is closed. Refer to the access points table above for details.	

Intentionally left blank

Hydraulic system No. 3 - Bleed

Applicability: 50001-54999, 55001-59999

Table of contents

Page

Hydraulic system No. 3 - Bleed..... 1
References..... 1
Common information..... 2
Preliminary requirements..... 2
Procedure..... 4
1 Option 1: With Hydraulic Power Unit (HPU) - option recommended..... 4
2 Option 2: Bleed with the Hydraulic system pumps..... 6
Requirements after job completion..... 11

List of tables

Page

1 References..... 1
2 Required conditions..... 2
3 Support equipment..... 3
4 Consumables, materials, and expendables..... 3
5 Spares..... 3
6 Required conditions..... 11

List of figures

Page

1 Hydraulic system No. 3 - Bleed..... 9

References

Table 1 References

Data Module/Technical Publication	Title
BD500-A-J12-10-29-02AAA-210C-A	Hydraulic systems No. 3 - Fill with hydraulic fluid
BD500-A-J12-10-29-02AAA-562A-A	Hydraulic system No. 3 - Depressurize hydraulics
BD500-A-J24-00-00-01AAA-561A-A	Electrical power - General - De-Energize electrical network
BD500-A-J24-00-00-01AAA-761A-A	Electrical power - General - Energize electrical network
BD500-A-J24-00-00-01AAA-913G-A	Electrical/Electronic safety precautions - General maintenance safety procedure
BD500-A-J27-00-00-01AAA-913G-A	Flight control safety precautions - General maintenance safety procedure
BD500-A-J27-11-01-01AAA-320A-A	Aileron Power Control Unit (PCU) - Operation test
BD500-A-J27-21-01-01AAA-320A-A	Rudder Power Control Unit (PCU) - Operation test
BD500-A-J27-31-01-01AAA-320A-A	Elevator Power Control Unit (PCU) - Operation test
BD500-A-J27-50-00-01AAA-320A-A	Flap and slat system - Operation test

Data Module/Technical Publication	Title
BD500-A-J29-00-00-00AAA-913G-A	Hydraulic safety precautions - General maintenance safety procedure
BD500-A-J29-00-00-01AAA-913G-A	Hydraulic technical precautions - General maintenance safety procedure
BD500-A-J29-12-30-01AAA-200B-A	Hydraulic system No. 3 fluid reservoir - Quantity check
BD500-A-J29-12-42-01AAA-520A-A	Ecology bottle - Remove procedure
BD500-A-J29-12-42-01AAA-720A-A	Ecology bottle - Install procedure

Common information

This data module gives the procedure to bleed the hydraulic system No. 3 (written as "hydraulic system" in this procedure). The hydraulic system is installed in the aft equipment bay.

Preliminary requirements

Production maintenance data

Zones	211		Flight compartment, left side
	212		Flight compartment, right side
	312		Aft fuselage, right side
Access points	867	Door	

Required conditions

Table 2 Required conditions

Action/Condition	Data Module/Technical publication
Make sure that the aircraft is safe for maintenance.	
Obey the electrical/electronic safety precautions.	BD500-A-J24-00-00-01AAA-913G-A
Obey all the flight control safety precautions.	BD500-A-J27-00-00-01AAA-913G-A
Obey the hydraulic safety precautions.	BD500-A-J29-00-00-00AAA-913G-A
Obey the hydraulic technical precautions.	BD500-A-J29-00-00-01AAA-913G-A
Energize the electrical network.	BD500-A-J24-00-00-01AAA-761A-A

Action/Condition	Data Module/Technical publication
Make sure that the access door is open. Refer to the access points table above for details.	

Support equipment

Table 3 Support equipment

Name	Identification/Reference	Quantity	Remark
Container, fluid - 1 US-Gal. (3.8 L)	STD-0078	1	
Maintenance platform - 5 to 10 ft (1.5 to 3 m), or equivalent	STD-0323	AR	
Hydraulic ground cart	58311GQ 5833	1	

Consumables, materials, and expendables

Table 4 Consumables, materials, and expendables

Name	Identification/Reference	Quantity	Remark
Cloths, cleaning, low-lint	05-001	AR	
Isopropyl alcohol (IPA)	11-004	AR	

Spares

Table 5 Spares

Name	Identification/Reference	Quantity	Remark
None			

Safety conditions

None

Procedure

1 **Option 1**: With Hydraulic Power Unit (HPU) - option recommended.

1.1 Bleed the hydraulic system as follows:

Refer to Fig. 1 .

1.1.1 Put the container (Commercially available, Pt. No. STD-0078) below the work area.

1.1.2 Bleed the hydraulic system with the Hydraulic Power Unit (HPU) (59603, Pt. No. 58311GQ) as follows:

1.1.2.1 On the hydraulic service panel, do the steps as follows:

1.1.2.1.1 Remove the cap (1) from the pressure quick disconnect coupling (2).

1.1.2.1.2 Connect the HPU (59603, Pt. No. 58311GQ) pressure line to the pressure quick disconnect coupling (2).

1.1.2.1.3 Remove the cap (3) from the return quick disconnect coupling (4).

1.1.2.1.4 Connect the HPU (59603, Pt. No. 58311GQ) return line to the return quick disconnect coupling (4).

CAUTION

Do not pressurize the hydraulic systems with a ground hydraulic power-unit without the return line connected. If the return line must go into a container, make sure the return line is open before you apply pressure. You can cause damage to the hydraulic seals.

1.1.2.2 Set the HPU (59603, Pt. No. 58311GQ) in the open loop mode. Refer to manufacturer instructions.

1.1.2.3 Start the HPU (59603, Pt. No. 58311GQ) . Refer to the manufacturer instructions.

1.1.2.4 On the HPU (59603, Pt. No. 58311GQ) , set the pressure to 300 ±50 psi (2068.44 ±344.74 kPa).

1.1.2.5 Make sure that there is no leakage from the hydraulic plumbing line connections.

1.1.2.6 On the HPU (59603, Pt. No. 58311GQ) , set the pressure to 3000 ±50 psi (20684.40 ±344.74 kPa).

1.1.2.7 Make sure that there is no leakage from the hydraulic plumbing line connections.

1.1.2.8 Get access to the HYD synoptic page.

Note

If the hydraulic fluid temperature is more than 96 °C (205 °F) during this procedure, hydraulic pressure must be released.

1.1.2.9 For hydraulic system No. 3, operate the applicable flight controls that follow for 10 complete cycles until the motion becomes smooth, free from jumps, and unusual noises:

Note

Perform bleeding procedure with all three hydraulic systems pressurized to 3000 ±200 psi (20684.40 ±1378.96 kPa). Elevator, Rudder and Aileron are powered hydraulically and electrically. Slowly operate the Elevator, Rudder and Aileron.

- Elevator. Refer to BD500-A-J27-31-01-01AAA-320A-A.
- Rudder. Refer to BD500-A-J27-21-01-01AAA-320A-A.
- Aileron. Refer to BD500-A-J27-11-01-01AAA-320A-A.
- Multi Function Spoiler (MFS). Refer to BD500-A-J27-31-01-01AAA-320A-A.
- Flap and slat. Refer to BD500-A-J27-50-00-01AAA-320A-A.

1.1.2.10 On the HYD synoptic page, make sure that the hydraulic pressure is at 3000 ±200 psi (20684.40 ±1378.96 kPa).

1.1.2.11 Bleed the reservoir bootstrap circuit as follows:

1.1.2.11.1 On the reservoir, repetitively press momentarily the bleed/relief valve to bleed air out of the system while monitoring the ecology bottle to avoid spillage.

1.1.2.11.2 On the reservoir, press the manual depressurization valve.

1.1.2.11.3 On the HPU (59603, Pt. No. 58311GQ) , set the pressure to 2000 ±50 psi (13789.60 ±344.74 kPa).

1.1.2.11.4 On the HYD synoptic page, make sure that the hydraulic pressure is at2000 ±50 psi (13789.60 ±344.74 kPa).

1.1.2.11.5 On the reservoir, repetitively press momentarily the bleed/relief valve to bleed air out of the system while monitoring the ecology bottle to avoid spillage.

1.1.2.11.6 On the HPU (59603, Pt. No. 58311GQ) , set the pressure to 3000 ±50 psi (20684.40 ±344.74 kPa).

1.1.2.11.7 On the HYD synoptic page, make sure that the hydraulic pressure is at 3000 ±50 psi (20684.40 ±344.74 kPa).

1.1.2.11.8 Do Step 1.1.2.9 .

1.1.2.11.9 On the reservoir, repetitively press momentarily the bleed/relief valve to bleed air out of the system while monitoring the ecology bottle to avoid spillage.

1.1.2.12 Do Step 1.1.2.11.1 for three times.

Note

If air still present on the system (visible bubble in the line to ecology bottle), it is recommended to continue above procedure until no air is present in the line during bleeding.

1.1.2.13 Depressurize the hydraulic system No. 3. with hydraulic ground cart (Option 2). Refer to BD500-A-J12-10-29-02AAA-562A-A.

1.1.2.14 On the hydraulic service panel, do the steps as follows:

1.1.2.14.1 Disconnect the HPU (59603, Pt. No. 58311GQ) pressure line from the pressure quick disconnect coupling (2).

1.1.2.14.2 Install the cap (1) on the pressure quick disconnect coupling (2).

1.1.2.14.3 Disconnect the HPU (59603, Pt. No. 58311GQ) return line from the return quick disconnect coupling (4).

1.1.2.14.4 Install the cap (3) on the return quick disconnect coupling (4).

2 **Option 2**: Bleed with the Hydraulic system pumps.

2.1 Bleed the hydraulic system with the aircraft pumps as follows:

CAUTION

Do not operate the Alternating Current Motor Pump (ACMP) or Engine Driven Pump (EDP) if hydraulic reservoir level is below the lower limit given in the servicing placard. You can cause damage to the pump.

2.1.1 Fill the hydraulic system No. 3. Refer to BD500-A-J12-10-29-02AAA-210C-A.

2.1.2 On the visual indicator, monitor and record the hydraulic fluid level.

2.1.3 On the HYD synoptic page, monitor and record the hydraulic fluid level.

2.1.4 Make sure that the hydraulic fluid level value of the visual indicator is with in 5% of the HYD synoptic page value.

2.1.5 On the HYD control panel, turn the following switches to ON.

- HYD3 3A
- HYD3 3B.

Note

Operate only one Alternating Current Motor Pump (ACMP) at the time while conducting this procedure.

2.1.6 After 10 seconds, on the HYD synoptic page, make sure that the hydraulic pressure increases.

2.1.7 After 30 seconds, make sure that the hydraulic pressure becomes stable at 3000 ±50 psi (20684.40 ±344.74 kPa).

2.1.8 On the reservoir, repetitively press momentarily the bleed/relief valve to bleed air out of the system while monitoring the ecology bottle to avoid spill.

2.1.8.1 Drain the ecology bottles as required to avoid spillage.

2.1.8.2 Remove the ecology bottles. Refer to BD500-A-J29-12-42-01AAA-520A-A.

2.1.8.3 Empty the fluid from the ecology bottles.

2.1.8.4 Install the ecology bottles. Refer to BD500-A-J29-12-42-01AAA-720A-A.

Note

ACMP shall run for approximately 5 minutes prior next step.

Note

If air still present on the system (visible bubble in the line to ecology bottle), it is recommended to continue above procedure until no air is present in the line during bleeding.

2.1.9 For hydraulic system No. 3, operate the applicable flight controls that follow for 10 complete cycles until the motion becomes smooth, free from jumps, and unusual noises:

Note

Perform bleeding procedure with all three hydraulic systems pressurized to 3000 ±200 psi (20684.40 ±1378.96 kPa). Elevator, Rudder and Aileron are powered hydraulically and electrically. Slowly operate the Elevator, Rudder and Aileron.

- Elevator. Refer to BD500-A-J27-31-01-01AAA-320A-A.
- Rudder. Refer to BD500-A-J27-21-01-01AAA-320A-A.
- Aileron. Refer to BD500-A-J27-11-01-01AAA-320A-A.
- MFS. Refer to BD500-A-J27-31-01-01AAA-320A-A.
- Flap and slat. Refer to BD500-A-J27-50-00-01AAA-320A-A.

2.1.10 Depressurize the hydraulic system No. 3. with aircraft pumps (Option 1). Refer to BD500-A-J12-10-29-02AAA-562A-A.

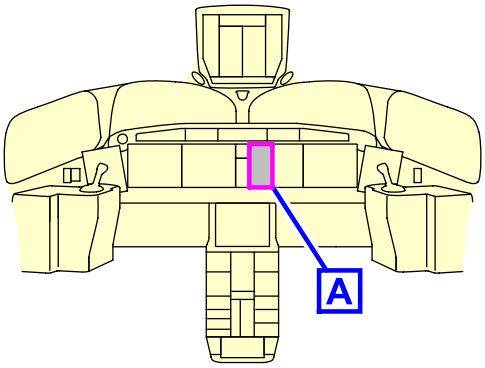

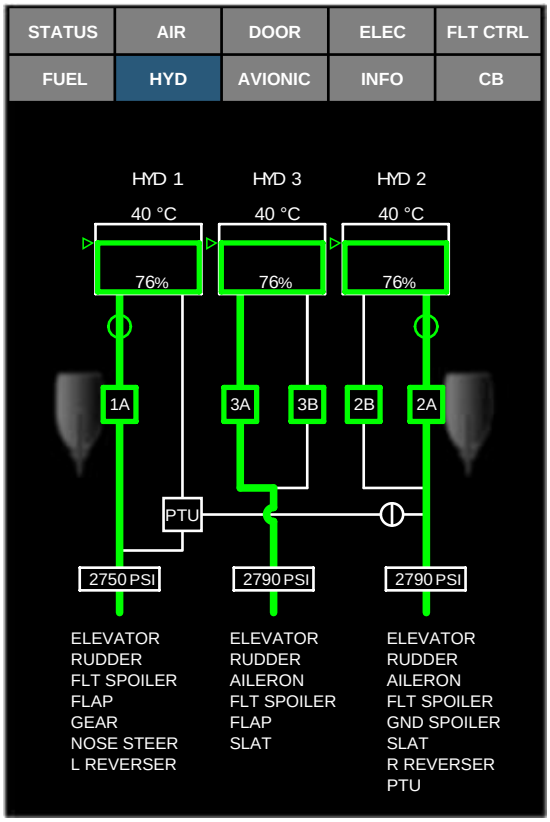

HYDRAULIC SYNOPTIC PAGE

A

ICN-BD500-A-J121029-C-3AB48-21031-A-001-01

Figure 1 Hydraulic system No. 3 - Bleed - (Sheet 1 of 2)

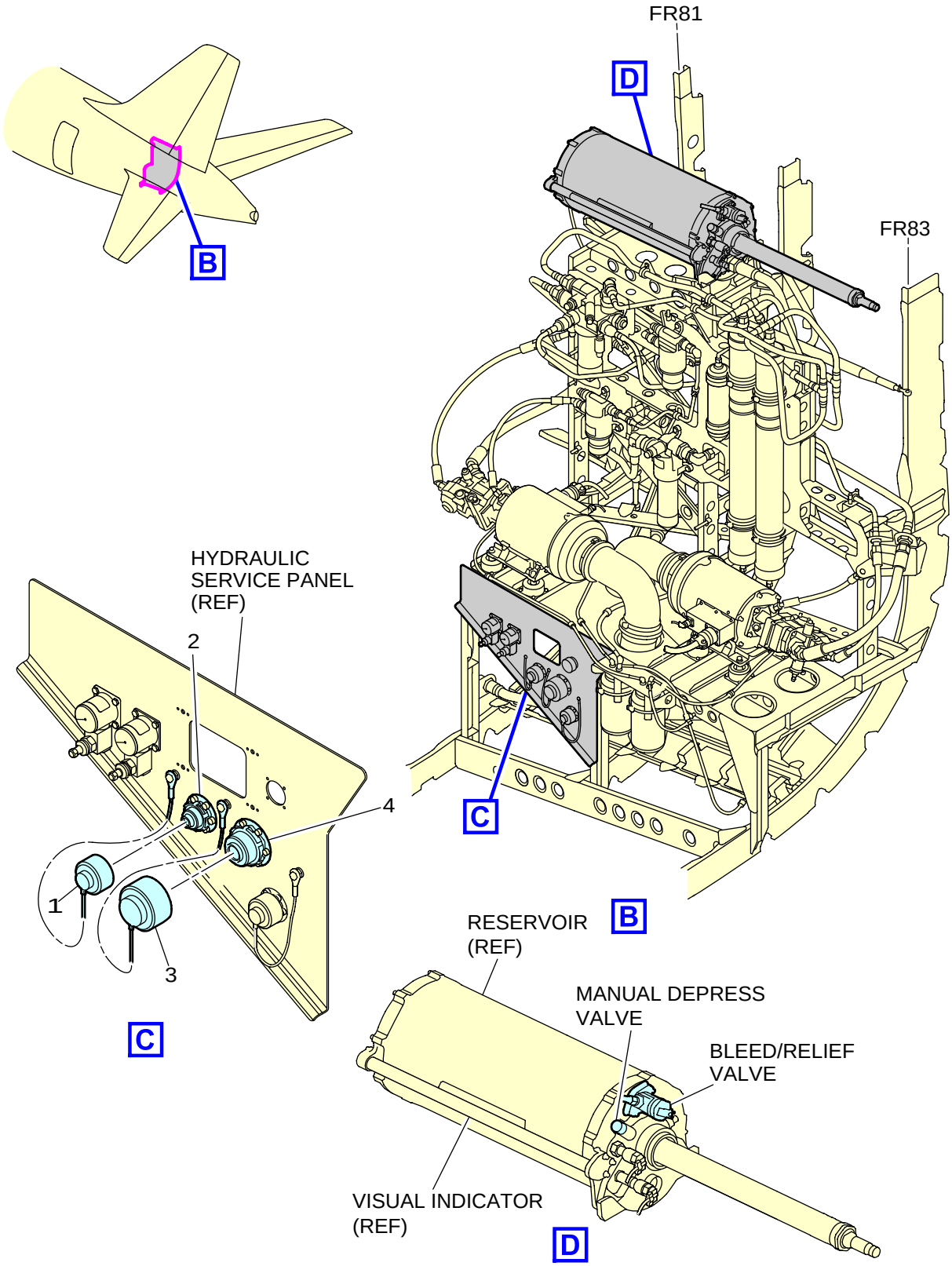

ICN-BD500-A-J121029-C-3AB48-21272-A-003-01

Figure 1 Hydraulic system No. 3 - Bleed - (Sheet 2 of 2)

Requirements after job completion

Required conditions

Table 6 Required conditions

Action/Condition	Data Module/Technical publication
Remove all tools, equipment, and unwanted materials from the work area.	
Do the hydraulic fluid reservoir quantity check on the system No. 3.	BD500-A-J29-12-30-01AAA-200B-A
De-energize the electrical network.	BD500-A-J24-00-00-01AAA-561A-A
Make sure that the access door is closed. Refer to the access points table above for details.	

Intentionally left blank

Hydraulic system No. 3 - Depressurize hydraulics

Applicability: 50001-54999, 55001-59999

Table of contents

Page

Hydraulic system No. 3 - Depressurize hydraulics..... 1
References..... 1
Common information..... 1
Preliminary requirements..... 2
Procedure..... 3
1 Option 1: Depressurize the hydraulic system 3 with aircraft pumps..... 3
2 Option 2: Depressurize the hydraulic system 3 with hydraulic ground cart..... 4
Requirements after job completion..... 9

List of tables

Page

1 References..... 1
2 Required conditions..... 2
3 Support equipment..... 3
4 Consumables, materials, and expendables..... 3
5 Spares..... 3
6 Required conditions..... 9

List of figures

Page

1 Hydraulic system No. 3 - Depressurize hydraulics..... 6
2 Hydraulic system No. 3 - Servicing placard..... 8

References

Table 1 References

Data Module/Technical Publication	Title
BD500-A-J24-00-00-01AAA-761A-A	Electrical power - General - Energize electrical network
BD500-A-J24-00-00-01AAA-561A-A	Electrical power - General - De-Energize electrical network
BD500-A-J24-00-00-01AAA-913G-A	Electrical/Electronic safety precautions - General maintenance safety procedure
BD500-A-J27-00-00-01AAA-913G-A	Flight control safety precautions - General maintenance safety procedure
BD500-A-J29-00-00-01AAA-913G-A	Hydraulic technical precautions - General maintenance safety procedure
BD500-A-J51-26-00-01AAA-251A-A	Solvent cleaning - Clean with chemical agent

Common information

This data module gives the procedure to depressurize the hydraulic system No. 3 (written as "hydraulic system" in this procedure). The hydraulic system is installed in the aft fuselage.

Preliminary requirements

Production maintenance data

Zones	211		Flight compartment, left side
	212		Flight compartment, right side
	312		Aft fuselage, right side
Access points	867	Door	

Required conditions

Table 2 Required conditions

Action/Condition	Data Module/Technical publication
Make sure that the aircraft is safe for maintenance.	
Obey all the electrical/electronic safety precautions.	BD500-A-J24-00-00-01AAA-913G-A
Obey all the flight control safety precautions.	BD500-A-J27-00-00-01AAA-913G-A
Obey all the hydraulic technical precautions.	BD500-A-J29-00-00-01AAA-913G-A
Obey the solvent cleaning standard practices.	BD500-A-J51-26-00-01AAA-251A-A
Make sure that the electronic circuit breakers that follow are OUT on the circuit breaker synoptic page:	

Name	CB Number/Location
ACMP 3A	EPC2-AC-3A
ACMP 3B	EPC2-AC-3B

Energize the electrical network.	BD500-A-J24-00-00-01AAA-761A-A
Put warning placards on the HYD 3A and 3B switches to give a warning not to pressurize the hydraulic system No. 3.	
Make sure that the access door is open. Refer to the access points table above for details.	

Support equipment

Table 3 Support equipment

Name	Identification/Reference	Quantity	Remark
Hydraulic ground cart	58311GQ 5833	1	

Consumables, materials, and expendables

Table 4 Consumables, materials, and expendables

Name	Identification/Reference	Quantity	Remark
Cloths, cleaning, low-lint	05-001	AR	
Isopropyl alcohol (IPA)	11-004	AR	

Spares

Table 5 Spares

Name	Identification/Reference	Quantity	Remark
None			

Safety conditions

None

Procedure

1 **Option 1**: Depressurize the hydraulic system 3 with aircraft pumps.

1.1 Depressurize the hydraulic system as follows:

Refer to Fig. 1 .

1.1.1 Depressurize the hydraulic system with the aircraft pumps as follows:

1.1.1.1 Get access to the HYD synoptic page.

1.1.1.2 On the HYD control panel, turn the 3A and 3B switches to OFF.

1.1.1.3 On the HYD synoptic page, make sure that the hydraulic pressure decreases to 0 psi (0 kPa).

Note

There will be very small hydraulic pressure if the system is not pressurized for approximately 12 hour.

If hydraulic system need to be opened or hydraulic component replacement required, continue with the following step

1.1.1.4 Release the remaining pressure from the bootstrap accumulator of the hydraulic system as follows:

1.1.1.4.1 On the reservoir, turn and hold the manual depress valve (5) for approximately 20 seconds.

1.1.1.4.2 On the indicator (6), make sure that the accumulator pressure is between the limits shown in Fig. 2 .

2 **Option 2**: Depressurize the hydraulic system 3 with hydraulic ground cart.

2.1 Depressurize the hydraulic system with the Hydraulic Power Unit (HPU) (59603, Pt. No. 58311GQ) as follows:

2.1.1 If necessary, on the hydraulic service panel, do the steps that follow:

2.1.1.1 Remove the cap (3) from the return quick disconnect coupling (4).

2.1.1.2 Connect the return line from the HPU (59603, Pt. No. 58311GQ) to the return quick disconnect coupling (4).

2.1.1.3 Remove the cap (1) from the pressure quick disconnect coupling (2).

2.1.1.4 Connect the pressure line from the HPU (59603, Pt. No. 58311GQ) to the pressure quick disconnect coupling (2).

2.1.1.5 If required, use a clean cloth (05-001) to clean the hydraulic fluid leakage from the work area with Isopropyl Alcohol (IPA) (11-004) .

2.1.2 On the HPU (59603, Pt. No. 58311GQ) , slowly decrease the hydraulic pressure. Refer to the manufacturer instructions.

2.1.3 Make sure that the hydraulic pressure decreases to 0 psi (0 kPa).

Note

There will be very small hydraulic pressure if the system is not pressurized for approximately 12 hour.

2.1.4 Shutdown the HPU (59603, Pt. No. 58311GQ) . Refer to the manufacturer instructions.

2.1.5 On the hydraulic service panel, do the steps that follow:

2.1.5.1 Disconnect the pressure line from the pressure quick disconnect coupling (2).

2.1.5.2 Install the cap (1) on the pressure quick disconnect coupling (2)

2.1.5.3 Disconnect the return line from the return quick disconnect coupling (4).

2.1.5.4 Install the cap (3) on the return quick disconnect coupling (4).

Note

If hydraulic system need to be opened or hydraulic component replacement required, continue with the following step.

2.1.5.5 Release the remaining pressure from the bootstrap accumulator of the hydraulic system as follows:

2.1.5.5.1 On the reservoir, turn and hold the manual depress valve (5) for approximately 20 seconds.

2.1.5.5.2 On the indicator (6), make sure that the accumulator pressure is between the limits shown in Fig. 2 .

2.1.5.6 If required, use a cloth (05-001) to clean the hydraulic fluid leakage from the work area with IPA (11-004) .

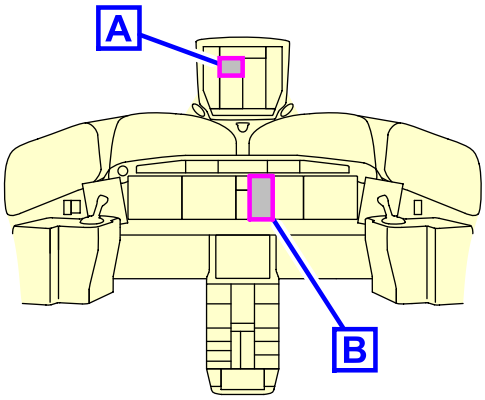

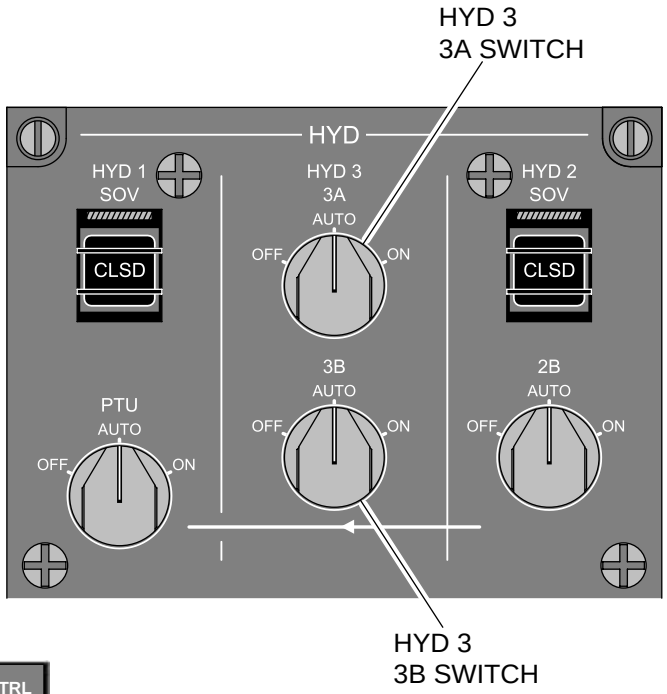

HYD CONTROL PANEL

A

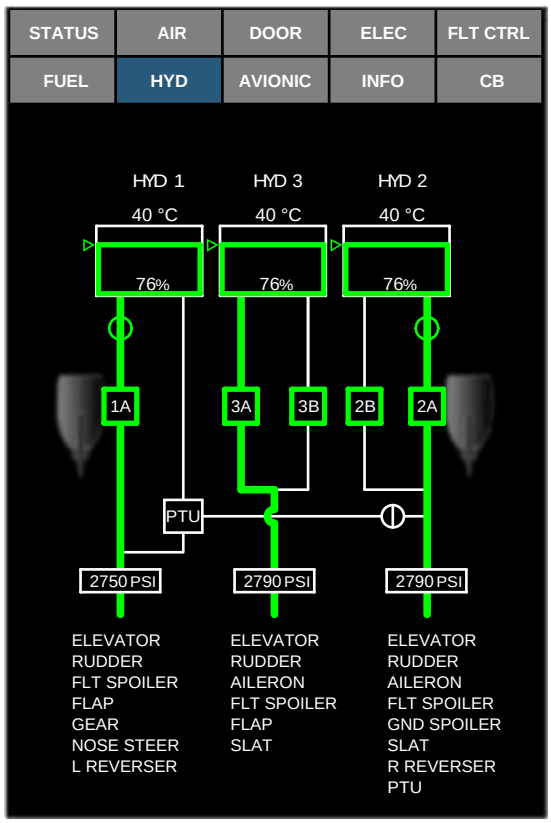

HYDRAULIC SYNOPTIC PAGE

B

ICN-BD500-A-J121029-C-3AB48-20790-A-001-01

Figure 1 Hydraulic system No. 3 - Depressurize hydraulics - (Sheet 1 of 2)

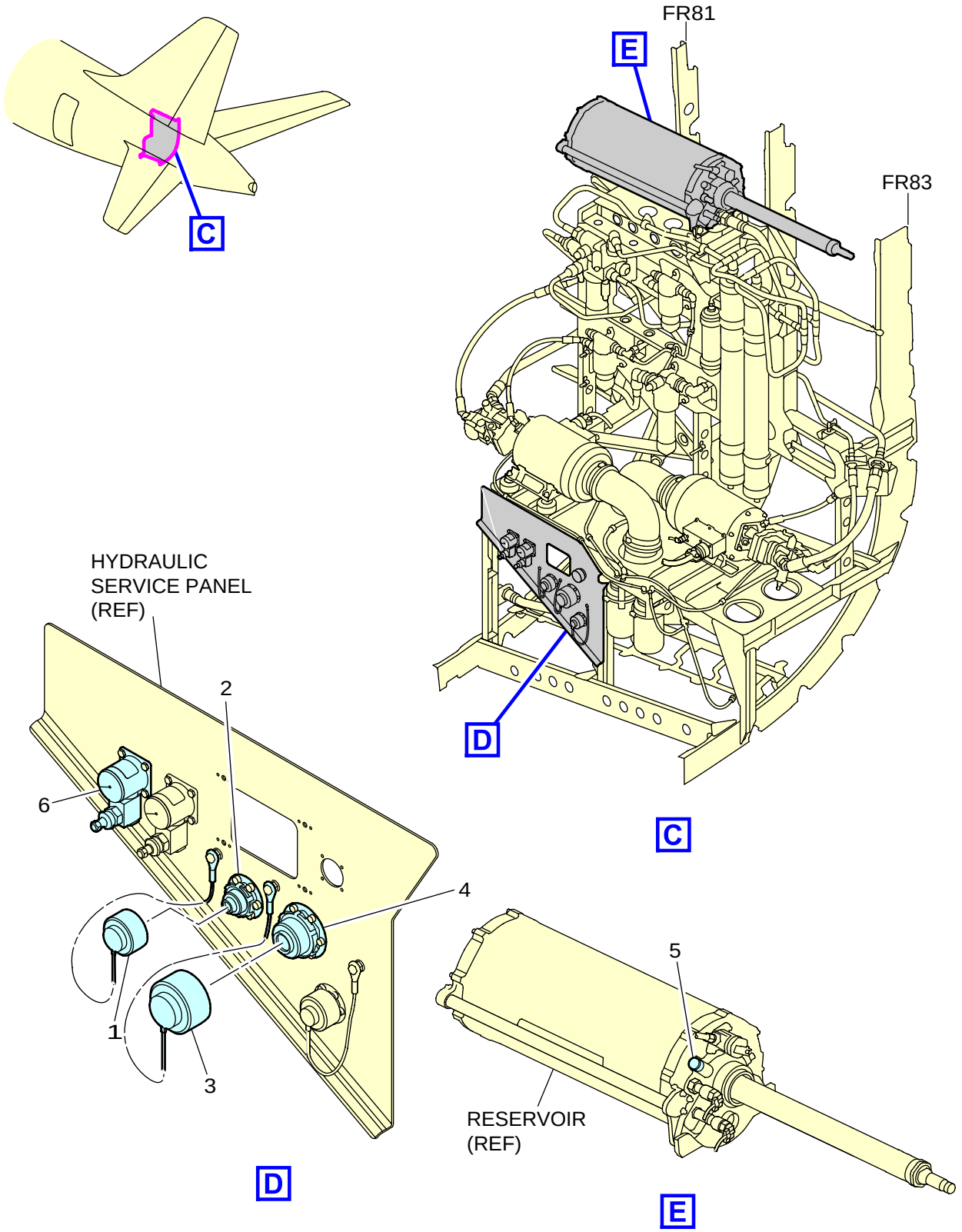

ICN-BD500-A-J121029-C-3AB48-21182-A-002-01

Figure 1 Hydraulic system No. 3 - Depressurize hydraulics - (Sheet 2 of 2)

SYSTEM 3 ACCUMULATOR

PRE-CHARGE CHECK CONDITIONS

- SYSTEM DEPRESSURIZED (PUMPS OFF)
- RESERVOIR DEPRESSURIZED (DEPRESS DUMP VALVE)
- LET THE NITROGEN PRESSURE BECOME STABLE
- CHECK PRE-CHARGE ON THE PRESSURE GAUGE

AMBIENT TEMPERATURE RANGE		GAS PRESSURE
[DEG C]	[DEG F]	[PSIG]
-40 to -29	-40 to -20	1162 to 1426
-29 to -18	-20 to 0	1215 to 1494
-18 to -7	0 to 20	1268 to 1562
-7 to 4	20 to 40	1321 to 1630
4 to 16	40 to 60	1374 to 1698
16 to 27	60 to 80	1426 to 1766
27 to 38	80 to 100	1479 to 1834
38 to 49	100 to 120	1532 to 1902
49 to 60	120 to 140	1585 to 1970

CAUTION

USE NITROGEN ONLY

FOR SERVICING PROCEDURE REFER TO THE MAINTENANCE MANUAL

ICN-BD500-A-J121029-C-3AB48-21745-A-002-01

Figure 2 Hydraulic system No. 3 - Servicing placard

Requirements after job completion

Required conditions

Table 6 Required conditions

Action/Condition	Data Module/Technical publication
Remove all tools, equipment, and unwanted material from the work area.	
Make sure that the access door is closed. Refer to the access points table above for details.	
De-energize the electrical network.	BD500-A-J24-00-00-01AAA-561A-A

Intentionally left blank

Hydraulic system No. 3 accumulator - Release nitrogen pressure

Applicability: 50001-54999, 55001-59999

Table of contents

Page

Hydraulic system No. 3 accumulator - Release nitrogen pressure..... 1
References..... 1
Common information..... 1
Preliminary requirements..... 1
Procedure..... 3
Requirements after job completion..... 5

List of tables

Page

1 References..... 1
2 Required conditions..... 2
3 Support equipment..... 2
4 Consumables, materials, and expendables..... 3
5 Spares..... 3
6 Required conditions..... 5

List of figures

Page

1 Accumulator, hydraulic system No. 3 - Release nitrogen pressure..... 4

References

Table 1 References

Data Module/Technical Publication	Title
BD500-A-J12-10-29-02AAA-231A-A	Hydraulic system No. 3 - Bleed
BD500-A-J12-10-29-02AAA-562A-A	Hydraulic system No. 3 - Depressurize hydraulics
BD500-A-J24-00-00-01AAA-913G-A	Electrical/Electronic safety precautions - General maintenance safety procedure
BD500-A-J29-00-00-01AAA-913G-A	Hydraulic technical precautions - General maintenance safety procedure

Common information

This data module gives the procedure to release the nitrogen pressure from the hydraulic system No. 3 accumulator (written as "accumulator" in this procedure). The accumulators are installed in the aft equipment compartment.

Preliminary requirements

Production maintenance data

Zones	312	Aft fuselage, right side

Access points	867	Door

Required conditions

Table 2 Required conditions

Action/Condition	Data Module/Technical publication
Make sure that the aircraft is safe for maintenance.	
Obey all the electrical/electronic safety precautions.	BD500-A-J24-00-00-01AAA-913G-A
Obey all the hydraulic technical precautions.	BD500-A-J29-00-00-01AAA-913G-A
Make sure that the electronic circuit breakers that follow are OUT on the circuit breaker synoptic page:	

Name	CB Number/Location
ACMP 3A	EPC2-AC-3A
ACMP 3B	EPC2-AC-3B

Put warning placards on the hydraulic control panel and the flight controls to give a warning not to operate or move these parts.	
Make sure that the access door is open. Refer to the access points table above for details.	
Depressurize the hydraulic system No. 3.	BD500-A-J12-10-29-02AAA-562A-A

Support equipment

Table 3 Support equipment

Name	Identification/Reference	Quantity	Remark
None			

Consumables, materials, and expendables

Table 4 Consumables, materials, and expendables

Name	Identification/Reference	Quantity	Remark
None			

Spares

Table 5 Spares

Name	Identification/Reference	Quantity	Remark
None			

Safety conditions

None

Procedure

1 Release the accumulator pressure as follows:

Refer to Fig. 1 .

1.1 Remove the cap (1) from the accumulator charging valve (2).

WARNING

The nitrogen charging valve is under high pressure. Protective gloves are required to loosen the charging valve to a maximum of two turns. Failure to obey can blow the valve out and cause injure personnel.

1.2 Slowly loosen the nut (3) on the accumulator charging valve (2).

Note

If there is hydraulic fluid coming out of accumulator charging valve, there is internal leakage of the accumulator.

1.3 On the indicator (4), make sure that the accumulator pressure decreases.

1.4 Let the accumulator pressure be stable at 0 psig (0 kPa) for a period of 10 minutes.

1.5 When the accumulator pressure is at 0 psig (0 kPa), tighten the nut (3).

1.6 Install the cap (1) on the accumulator charging valve (2).

1.7 Clean all the hydraulic fluid leakage from the work area.

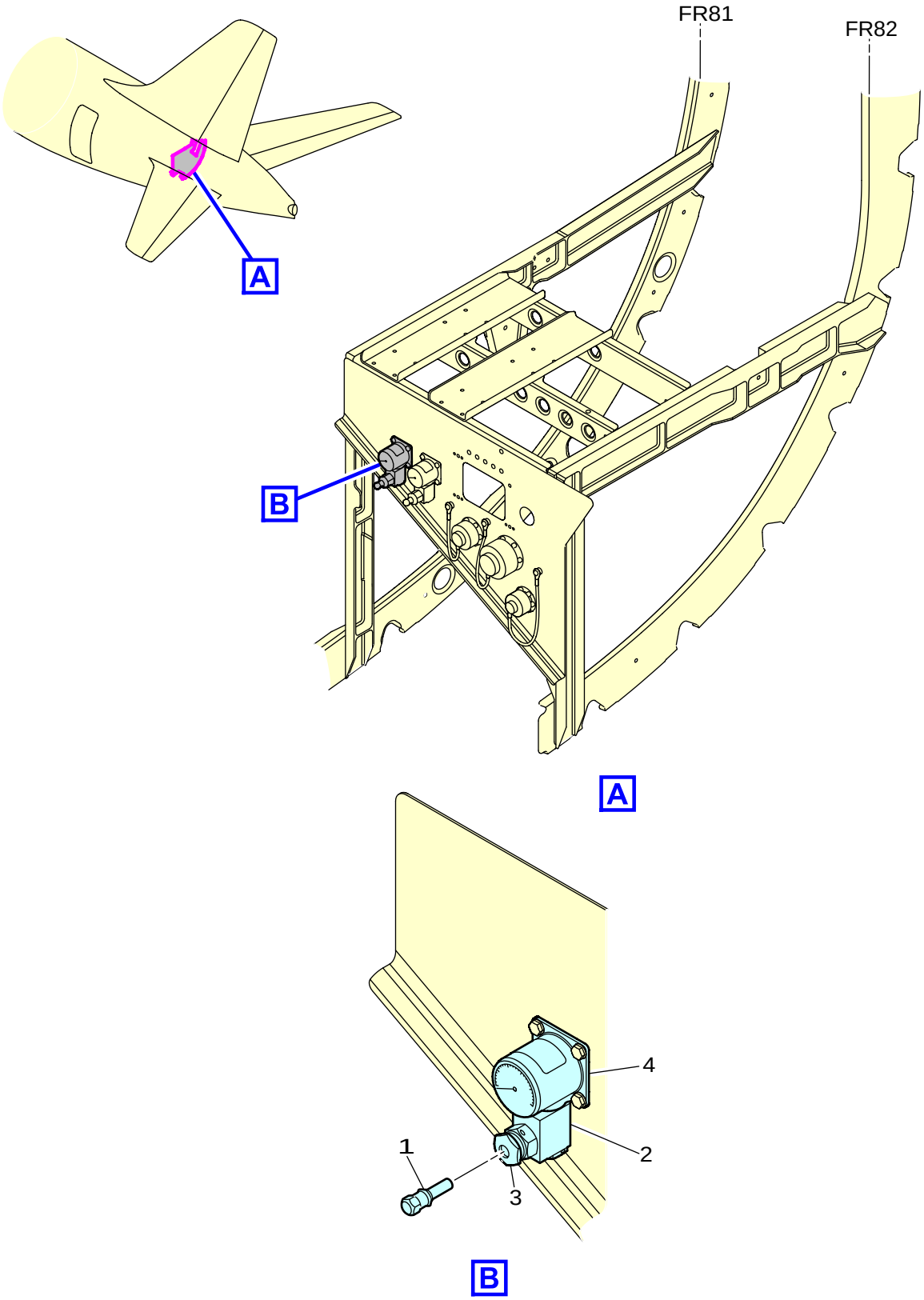

ICN-BD500-A-J121029-C-3AB48-21824-A-001-01

Figure 1 Accumulator, hydraulic system No. 3 - Release nitrogen pressure

Requirements after job completion

Required conditions

Table 6 Required conditions

Action/Condition	Data Module/Technical publication
Remove all tools, equipment, and unwanted material from the work area.	
Bleed the hydraulic system No. 3.	BD500-A-J12-10-29-02AAA-231A-A
Make sure that the access door is closed. Refer to the access points table above for details.	
Make sure that the electronic circuit breakers that follow are IN on the circuit breaker synoptic page:	

Name	CB Number/Location
ACMP 3A	EPC2-AC-3A
ACMP 3B	EPC2-AC-3B

Remove the warning placards.	

Intentionally left blank

Potable water system - Drain water

Applicability: 50001-54999, 55001-59999

Table of contents

Page

Potable water system - Drain water 1
References 1
Common information 1
Preliminary requirements 1
Procedure 3
Requirements after job completion 6

List of tables

Page

1 References 1
2 Required conditions 2
3 Support equipment 2
4 Consumables, materials, and expendables 3
5 Spares 3
6 Required conditions 6

List of figures

Page

1 Potable water system - Drain water 5

References

Table 1 References

Data Module/Technical Publication	Title
BD500-A-J12-10-38-01AAA-216A-A	Potable Water System (PWS) - Fill with water
BD500-A-J12-30-38-01AAA-251A-A	Potable water system - Clean with chemical agent

Common information

This data module gives the procedure to drain the Potable Water System (PWS). The PWS is installed through the forward and aft fuselage.

Preliminary requirements

Production maintenance data

Zones	125	Lower forward and forward-mid fuselage surrounding forward cargo compartment, left side
	126	Lower forward and forward-mid fuselage surrounding forward

			cargo compartment, right side
	145		Lower aft fuselage, surrounding aft cargo compartment, left side
	146		Lower aft fuselage, surrounding aft cargo compartment, right side
	221		Passenger compartment forward servicing area, left side
	222		Passenger compartment forward servicing area, right side
	245		Passenger compartment aft servicing area, left side
	246		Passenger compartment aft servicing area, right side
Access points	146CR	Door	

Required conditions

Table 2 Required conditions

Action/Condition	Data Module/Technical publication
Make sure that the aircraft is safe for maintenance.	
Make sure that the access door is open. Refer to the access points table above for details.	

Support equipment

Table 3 Support equipment

Name	Identification/Reference	Quantity	Remark
Potable water container	STD-0085	2	
Vacuum cleaner	STD-0266	1	

Consumables, materials, and expendables

Table 4 Consumables, materials, and expendables

Name	Identification/Reference	Quantity	Remark
None			

Spares

Table 5 Spares

Name	Identification/Reference	Quantity	Remark
None			

Safety conditions

None

Procedure

WARNING

Be careful when you touch the drain mast. It can be very hot and can cause injury to persons.

1 Drain the PWS as follows:
Refer to Fig. 1 .

1.1 Put the containers (Commercially available, Pt. No. STD-0085) below the forward and aft drain masts.

1.2 On the water service panel:

1.2.1 Open the water service panel door.

1.2.2 Set the FILL/FLIGHT/DRAIN switch to the DRAIN position.

1.2.3 Make sure that the DRAIN light comes on.

1.3 Water will start to drain from the forward and/or aft drain masts.

1.4 Drain the water for at least 5 minutes.

1.5 In the aircraft cabin:

1.5.1 Push each of the galley spigot(s) for up to 5 minutes to remove all the residual water in the galley spigot line(s).

Note

The residual water in the galley spigot line(s) will drain from the forward and/or aft drain masts.

1.5.2 Pull the handles of the galley and lavatory drain valves (minimum 10 seconds) to remove any residual water from the drain lines.

1.6 Monitor the aft and forward drain mast for water until the water flowing stops.

1.7 On the Cabin Management System (CMS), make sure that the potable water level in the tank is at 0%.

1.8 Make sure that the forward and aft drain masts are correctly drained before the water valve is set to FLIGHT position and the servicing access door is closed.

1.9 On the water service panel:

1.9.1 Set the FILL/FLIGHT/DRAIN switch to the FLIGHT position.

1.9.2 Make sure that the DRAIN light comes off.

Applicability: 50001-50009, 55001-55002 and 50010-50066, 55003-55046, 55049-55075, 55077, 55080-55081, 55084-55087, 55089, 55091, 55094-55096, 55099, 55101, 55104, 55106-55108, 55110, 55113-55116, 55120-55121, 55124-55129, 55131-55137, 55139-55146, 55148-55151, 55153-55165, 55167-55168, 55170-55178, 55180, 55182-55183 PRE BD500-381007

2 Remove the trapped water from the water fill line and filter as follows:

Refer to Fig. 1 .

2.1 Connect the vacuum (Commercially available, Pt. No. STD-0266) hose to the water fill port.

2.2 Set the FILL/FLIGHT/DRAIN switch to the FILL position.

2.3 Apply power to the vacuum (Commercially available, Pt. No. STD-0266) .

2.4 Wait three to five minutes to extract all the water from the water fill line.

2.5 Remove power from the vacuum (Commercially available, Pt. No. STD-0266) .

2.6 Disconnect the vacuum (Commercially available, Pt. No. STD-0266) hose from the water fill port.

2.7 Set the FILL/FLIGHT/DRAIN switch to the FLIGHT position.

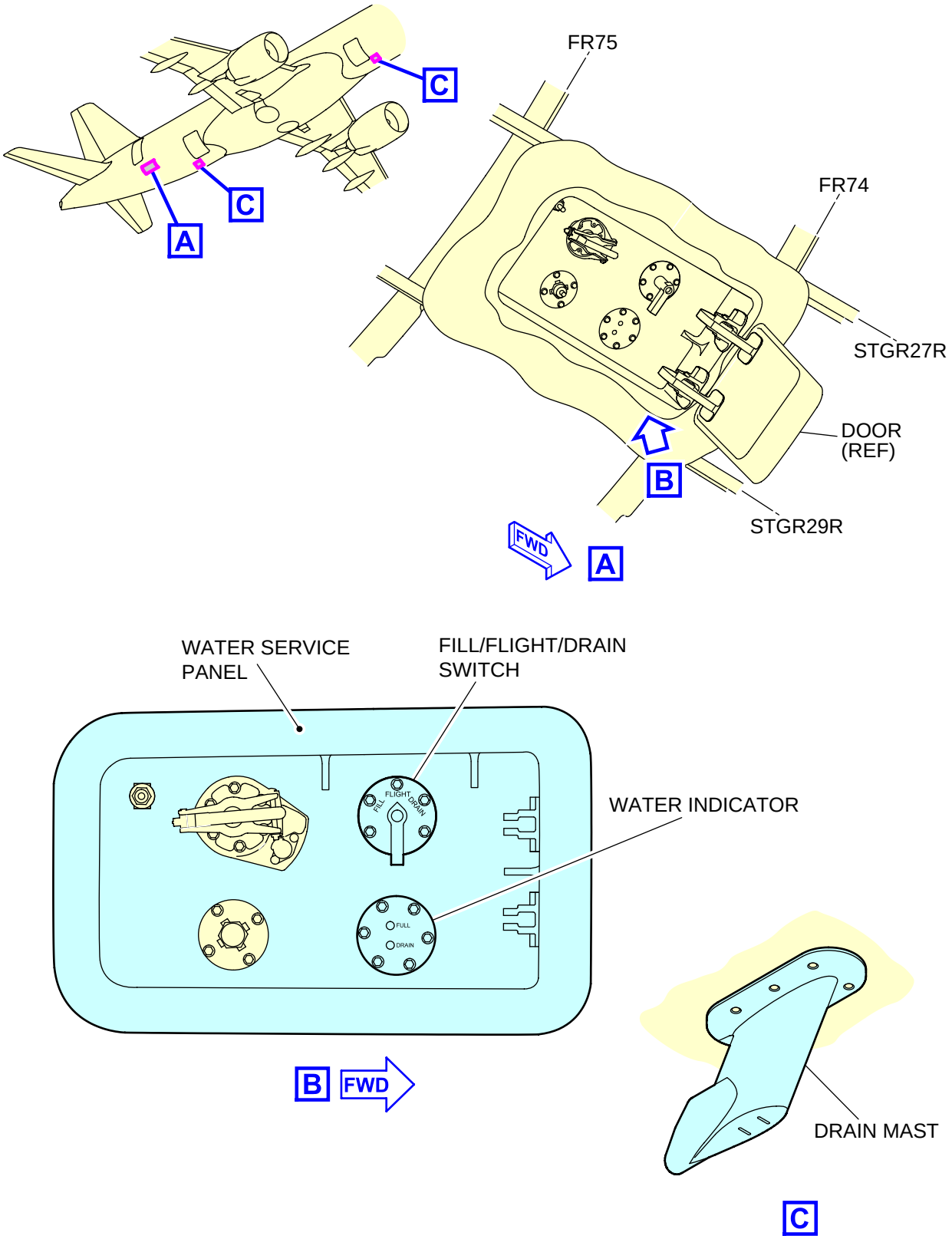

ICN-BD500-A-J121038-C-3AB48-25048-A-002-01

Figure 1 Potable water system - Drain water

Requirements after job completion

Required conditions

Table 6 Required conditions

Action/Condition	Data Module/Technical publication
Remove all tools, equipment and unwanted materials from the work area.	
If necessary, clean the potable water system with chemical agent.	BD500-A-J12-30-38-01AAA-251A-A
If necessary, fill the potable water system with water.	BD500-A-J12-10-38-01AAA-216A-A
Make sure that the access door is closed. Refer to the access points table above for details.	

Potable water system - Clean with chemical agent

Applicability: 50001-54999, 55001-59999

Table of contents

Page

Potable water system - Clean with chemical agent..... 1
References..... 1
Common information..... 1
Preliminary requirements..... 2
Procedure..... 4
Requirements after job completion..... 9

List of tables

Page

1 References..... 1
2 Required conditions..... 3
3 Support equipment..... 3
4 Consumables, materials, and expendables..... 4
5 Spares..... 4
6 Sanitizing Concentrate Ratio..... 5
7 Required conditions..... 9

List of figures

Page

1 Potable water system - Clean with chemical agent..... 8

References

Table 1 References

Data Module/Technical Publication	Title
BD500-A-J24-00-00-01AAA-761A-A	Electrical power - General - Energize electrical network
BD500-A-J12-10-38-01AAA-226A-A	Potable water system - Drain water
BD500-A-J25-32-01-01AAA-520A-A	Galley coffee maker - Remove procedure
BD500-A-J25-32-02-01AAA-520A-A	Beverage water heater - Remove procedure
BD500-A-J25-32-04-03AAA-520A-A	Steam oven - Remove procedure
BD500-A-J12-10-38-01AAA-216A-A	Potable Water System (PWS) - Fill with water
BD500-A-J25-32-01-01AAA-720A-A	Galley coffee maker - Install procedure
BD500-A-J25-32-02-01AAA-720A-A	Beverage water heater - Install procedure
BD500-A-J25-32-04-03AAA-720A-A	Steam oven - Install procedure

Common information

This data module gives the procedure to clean the Potable Water System (PWS) with a chemical agent. The PWS is installed through the forward and aft fuselage.

This procedure is necessary to clean the components of the PWS to eliminate microbiological organisms.

Note

- Lavatories A, C, and E are installed on the left side of the passenger compartment. Lavatory D is installed on the right side of the passenger compartment. Lavatories C and D are not installed on all aircraft.
- Galleys 1, 2, and 4 are installed on the right side of the passenger compartment. Galley 3 is installed on the left side of the passenger compartment. Galley 3 is not installed on all aircraft.

Preliminary requirements

Production maintenance data

Zones	125		Lower forward and forward-mid fuselage surrounding forward cargo compartment, left side
	126		Lower forward and forward-mid fuselage surrounding forward cargo compartment, right side
	145		Lower aft fuselage, surrounding aft cargo compartment, left side
	146		Lower aft fuselage, surrounding aft cargo compartment, right side
	221		Passenger compartment forward servicing area, left side
	222		Passenger compartment forward servicing area, right side
	241		Passenger compartment, left side
	242		Passenger compartment, right side
	245		Passenger compartment aft servicing area, left side
	246		Passenger compartment aft servicing area, right side
Access points	146CR	Door	

Required conditions

Table 2 Required conditions

Action/Condition	Data Module/Technical publication
Make sure that the aircraft is safe for maintenance.	
Make sure that the access door is open. Refer to the access points table above for details.	
Energize electrical network.	BD500-A-J24-00-00-01AAA-761A-A
Make sure that the electronic Circuit Breaker (CB) that follow are IN on the CB synoptic page:	

Name	CB Number/Location
WTR WASTE CTRL	CDC5-11-16
WTR PUMP 1	CDC5-17-4
WTR PUMP 2	CDC5-17-5

Drain the PWS.	BD500-A-J12-10-38-01AAA-226A-A
Remove the galley coffee maker.	BD500-A-J25-32-01-01AAA-520A-A
Remove the beverage water heater.	BD500-A-J25-32-02-01AAA-520A-A
Remove the steam oven.	BD500-A-J25-32-04-03AAA-520A-A

Support equipment

Table 3 Support equipment

Name	Identification/Reference	Quantity	Remark
Potable water container	STD-0086	3	
Potable water cart	19-4301-0000	1	
Spray nozzle tool	38202-143	1	

Consumables, materials, and expendables

Table 4 Consumables, materials, and expendables

Name	Identification/Reference	Quantity	Remark
Test paper for chlorine content in parts per million (ppm), includes comparison chart	17-003	AR	
Sanitizing concentrate, chlorine bleach, with sodium hypochlorite 5-8%	17-006	AR	
Gloves, film latex or nylon/polyethylene disposable	05-396	AR	

Spares

Table 5 Spares

Name	Identification/Reference	Quantity	Remark
None			

Safety conditions

None

Procedure

1 Clean the PWS with chemical agent as follows:
Refer to Fig. 1 .

WARNINGS

- **When you use chemical compounds, obey the precautions that follow:**
  - **Obey all the local health and safety precautions and regulations**
  - **Use protective clothing and eye protection**
  - **Stay near an emergency eye-wash station**
  - **Do the work where there is a good flow of clean air.**

  Chemical compounds can be poisonous and/or abrasive and cause injury to persons and damage to equipment.

- **Always wear rubber gloves, goggles and protective clothing when you do this procedure. If you do not do this, injury to your eyes and skin can occur.**

1.1 Prepare the chlorine solution for 50 gallons. This preparation is sufficient to fill-up the PWS tank and piping.

1.1.1 Fill the container (Commercially available, Pt. No. STD-0086) with water.

CAUTION

Obey the manufacturer's instructions on product usage and contact your local health and safety representative for safe handling of the product.

1.1.2 Mix the chlorine (17-006) in the water.

Table 6 ***Sanitizing Concentrate Ratio***

SANITIZING CONCENTRATE	MIXTURE PER VOLUME
Chlorine Bleach, 5.25% Sodium hypochlorite	1 fl oz (29,5 ml) per 10 US gal (8 imp gal) (38 L)

Note

The potable water tank has a capacity of 42 US gal (159 L).

Note

It is possible to do the mixture in the container of the potable servicing cart or add the sanitizing concentrate through the potable adapter hose.

1.1.3 Do the test of the chlorine water solution with the chlorine test paper (17-003) .

1.1.4 Make sure that the chlorine water solution contains a chlorine concentrate of 100 ppm.

1.1.5 Drain the potable water from the potable water service cart (59603, Pt. No. 19-4301-0000) .

1.1.6 Fill the potable water service cart (59603, Pt. No. 19-4301-0000) with the disinfectant solution.

1.2 Fill the chlorine water solution in the PWS to 100%. Refer to BD500-A-J12-10-38-01AAA-216A-A.

Note

Pressurization of the PWS occurs automatically five minutes after you set the FILL/DRAIN switch to the FLIGHT position.

1.3 Put the containers (Commercially available, Pt. No. STD-0086) below the drain masts.

1.4 Drain the disinfectant solution from the potable water service cart (59603, Pt. No. 19-4301-0000) .

1.5 Fill the potable water service cart (59603, Pt. No. 19-4301-0000) with potable water.

1.6 Close the water service panel door.

1.7 In the forward and aft lavatories and galleys, do as follows:

1.7.1 Flush the toilet five times, in each lavatory.

Note
An interval of 15 seconds is necessary between each time you flush the toilet.

1.7.2 Remove the screen from the lavatory faucet with the spray nozzle tool (DJ188, Pt. No. 38202-143) and clean the screen.

1.7.3 In each lavatory, open the water faucet for one minute or until the disinfectant solution comes out of the water faucet.

Note
The disinfectant solution has a distinct smell.

1.7.4 In each galley, open the water spigot for one minute or until the disinfectant solution comes out of the water faucet.

Note
The disinfectant solution has a distinct smell.

1.8 Keep the chlorine water solution in the PWS for 60 to 90 minutes.

1.9 Open the service panel door.

WARNING

Be careful while you drain the Potable Water System (PWS). Water in the PWS will be at high pressure and can cause injury to persons.

1.10 Drain the chlorine water solution from the PWS. Refer to BD500-A-J12-10-38-01AAA-226A-A.

1.11 Re-fill the fresh potable water to the PWS. Refer to BD500-A-J12-10-38-01AAA-216A-A.

1.12 In the forward and aft lavatories and galleys, do as follows:

1.12.1 In each lavatory, open the water faucet to drain the system for a minute or until no disinfectant solution comes out of the water faucet.

1.12.2 Flush the toilet five times, on each lavatory.

Note
An interval of 15 seconds is necessary between each time you flush the toilet.

1.12.3 In each galley insert, open the water spigot to drain the system for one minute or until no disinfectant solution comes out of the water spigot.

Note

The water from the spigot must be clean and free from smell.

1.12.4 After 30 seconds, hold a clean fluid container below the faucet/spigot to collect approximately eight ounces (240 cc) of water.

1.12.5 Do the test of the chlorine water solution with the chlorine test paper (17-003) .

1.12.6 Make sure that the chlorine concentrate is not more than 5 PPM for each test.

Note

If the chlorine concentrate is more than 5 PPM continue to drain and fill the PWS with potable water. Do this until the chlorine concentrate is not more than 5 PPM.

1.12.7 Install the screen on the lavatory faucet with the spray nozzle tool (DJ188, Pt. No. 38202-143) .

1.12.8 Drain the PWS. Refer to BD500-A-J12-10-38-01AAA-226A-A.

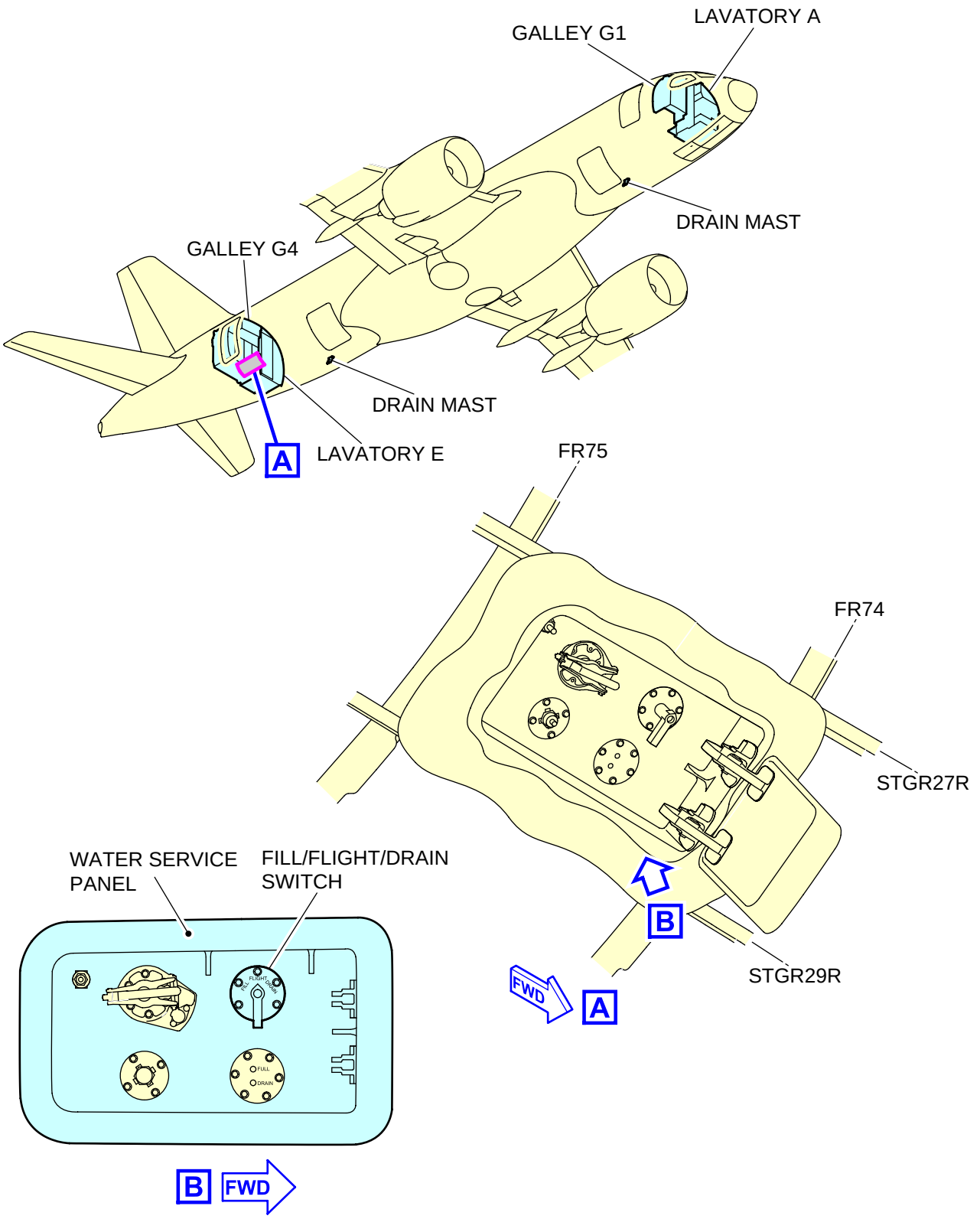

ICN-BD500-A-J121038-C-3AB48-25046-A-002-01

Figure 1 Potable water system - Clean with chemical agent

Requirements after job completion

Required conditions

Table 7 Required conditions

Action/Condition	Data Module/Technical publication
Remove all tools, equipment and unwanted materials from the work area.	
Install the galley coffee maker.	BD500-A-J25-32-01-01AAA-720A-A
Install the beverage water heater.	BD500-A-J25-32-02-01AAA-720A-A
Install the steam oven.	BD500-A-J25-32-04-03AAA-720A-A
Make sure that the access door is closed. Refer to the access points table above for details.	

Intentionally left blank

Water Waste System (WWS) - Drain other liquid

Applicability: 50001-54999, 55001-59999

Table of contents

Page

Water Waste System (WWS) - Drain other liquid..... 1
References..... 1
Common information..... 1
Preliminary requirements..... 1
Procedure..... 3
Requirements after job completion..... 6

List of tables

Page

1 References..... 1
2 Required conditions..... 2
3 Support equipment..... 2
4 Consumables, materials, and expendables..... 2
5 Spares..... 2
6 Required conditions..... 6

List of figures

Page

1 Water Waste System (WWS) - Drain other liquid..... 5

References

Table 1 References

Data Module/Technical Publication	Title
BD500-A-J12-10-38-02AAA-218A-A	Water Waste System (WWS) - Fill with other liquid

Common information

This data module gives the procedure to drain the Water Waste System (WWS). The WWS is drained from the aft fuselage.

Preliminary requirements

Production maintenance data

Zones	147		Lower aft fuselage equipment compartment, left side
Access points	146BR	Door	

Required conditions

Table 2 Required conditions

Action/Condition	Data Module/Technical publication
Make sure that the aircraft is safe for maintenance.	
Make sure that the access door is open. Refer to the access points table above for details.	

Support equipment

Table 3 Support equipment

Name	Identification/Reference	Quantity	Remark
Lavatory service unit	10-6401-0010	1	or equivalent. If vacuum system is used a maximum vacuum pressure of 10 psi is permitted.

Consumables, materials, and expendables

Table 4 Consumables, materials, and expendables

Name	Identification/Reference	Quantity	Remark
Cloths, cleaning, low-lint	05-001	AR	

Spares

Table 5 Spares

Name	Identification/Reference	Quantity	Remark
None			

Safety conditions

None

Procedure

WARNINGS

- **When you do the servicing of the waste system, use rubber gloves. Waste can get on your hands and cause an infection.**

- **Every component removed from the waste system should be considered as a biohazard. Obey the local handling procedures for biohazard. Components exposed to waste can be poisonous and/or abrasive and can cause sickness to persons and damage to equipment and aircraft.**

- **Waste should be considered as a biohazard. Obey the local health and safety precautions when working in the waste system. Waste can be poisonous and/or abrasive and can cause sickness to persons and damage to equipment and aircraft**

1 Drain the waste as follows:

Refer to Fig. 1 .

1.1 From the service unit (59603, Pt. No. 10-6401-0010) or equivalent, connect the drain hose to the service panel drain ball valve.

1.2 Move the actuation lever to 90 degrees down to open the drain ball valve.

1.3 Drain the waste. Refer to the Ground Support Equipment (GSE) manufacturer manual for detailed instructions.

1.4 Release the rinse fitting handle to open the rinse fitting cap.

1.5 From the service unit (59603, Pt. No. 10-6401-0010) , connect the rinse hose to the service panel rinse fitting.

1.6 Rinse the waste tank as follows:

1.6.1 At least two of the following three criteria must be respected to make sure that the level sensors are properly rinsed:

- Rinse the waste tank for 2.5 minutes, and no less than 2 minutes
- Rinse the waste tank with 75 liters (20 US gallons) and no less than 50 liters (13 US gallons) of fluid
- Rinse with a pressure of 30 psi (207 kPa), and no less than 25 psi (172 kPa), and no more than 60 psi (414 kPa).

1.7 Make sure that there is no fluid flow in the drain hose.

1.8 Move the actuation lever to 90 degrees up to close the drain ball valve.

1.9 Disconnect the drain hose from the drain ball valve.

1.10 Add 7.5 liters (2 US gallons) of precharge fluid to the WWS tank.

1.11 Disconnect the rinse hose from the rinse fitting.

1.12 Let the precharge fluid drain fully from the rinse fitting (3 minutes approximately).

1.13 Close the rinse fitting cap.

1.14 Clean the inner and external surfaces of the waste servicing area with a dry cloth (05-001) .

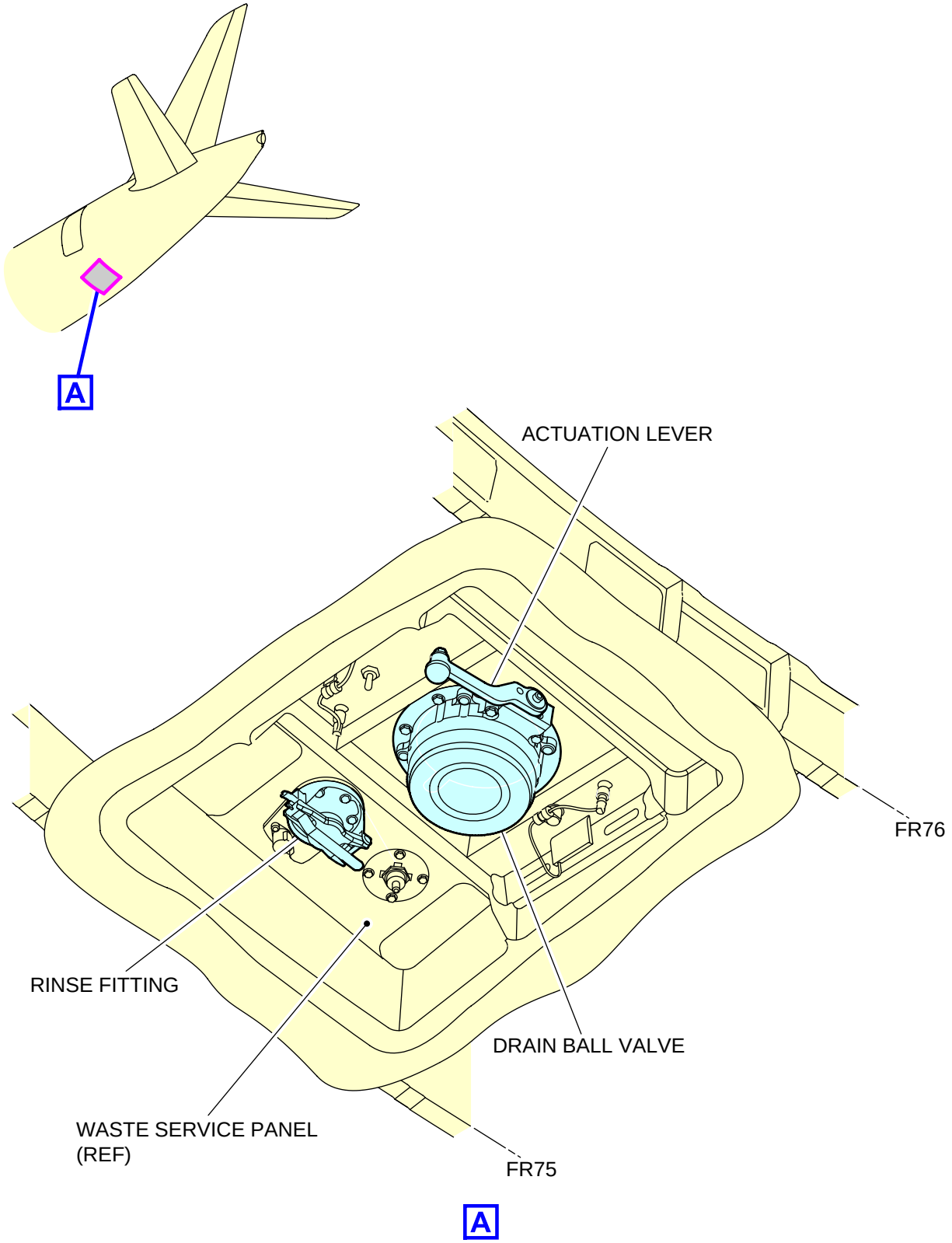

ICN-BD500-A-J121038-C-3AB48-22998-A-001-01

Figure 1 Water Waste System (WWS) - Drain other liquid

Requirements after job completion

Required conditions

Table 6 Required conditions

Action/Condition	Data Module/Technical publication
Fill the WWS with rinse liquid.	BD500-A-J12-10-38-02AAA-218A-A
Remove all tools, equipment, and unwanted materials from the work area.	
Make sure that the access door is closed. Refer to the access points table above for details.	

Deicing/Anti-icing - Remove ice

Applicability: 50001-54999, 55001-59999

Table of contents

Page

Deicing/Anti-icing - Remove ice..... 1
References..... 1
Common information..... 2
Preliminary requirements..... 7
Procedure..... 8
Requirements after job completion..... 43

List of tables

Page

1 References..... 1
2 Required conditions..... 7
3 Support equipment..... 8
4 Consumables, materials, and expendables..... 8
5 Spares..... 8
6 Active frost - Holdover guidelines for fluid Type I..... 12
7 Active frost - Holdover guidelines for fluid Type II, Type III, and Type IV..... 13
8 SAE TYPE I - Fluid holdover guidelines on critical aircraft surfaces composed predominantly of aluminum 1..... 14
9 SAE TYPE I - Fluid holdover guidelines on composite wing surfaces 1..... 16
10 SAE TYPE I - Deicing / anti-icing fluid application procedures..... 17
11 SAE TYPE II, TYPE III and TYPE IV - Deicing / anti-icing fluid application procedures..... 18
12 Visibility in snow vs. snowfall intensity chart..... 19
13 SAE TYPE II - Fluid holdover time guidelines..... 20
14 SAE TYPE IV - Fluid holdover time guidelines..... 22
15 SAE TYPE III - Fluid ice pellet and small hail allowance times..... 23
16 SAE TYPE IV - Fluid ice pellet and small hail allowance times..... 24
17 Required conditions..... 43

List of figures

Page

1 Park break panel..... 26
2 Wiper control switch..... 27
3 APU control panel..... 28
4 Slats/flaps panel..... 29
5 Throttle control system..... 30
6 Ignition system..... 31
7 Composite materials..... 32
8 Deicing/Anti- icing fluids application and non-application areas..... 33
9 Deicing fluids non-application areas..... 35
10 Deicing fluids non-application areas..... 36

References

Table 1 References

Data Module/Technical Publication	Title
None	

Common information

GENERAL

This data module gives the procedure for the deicing of the aircraft before takeoff.

Deicing is the removal of snow, ice or frost from the airplane critical surfaces by mechanical means, hot water or a hot mixture of water and deicing/anti-icing fluid. Anti-icing is the procedure to apply deicing/anti-icing fluid with holdover time sufficient to prevent that snow, ice or frost stays on airplane surfaces after deicing, before the takeoff.

Note

Removal of contaminants on runway surfaces, taxiways, aprons, holding bays and other areas, is the responsibility of the administration of the airports concerned, based on flight safety and schedule considerations.

The pilot-in-command is ultimately responsible to make sure that the airplane is in a safe condition for flight. Use the Automatic Terminal Information Service (ATIS) or other means to acquire accurate ambient temperature and other pertinent meteorological conditions. Outside Air Temperature (OAT) or Total Air Temperature (TAT) does not read accurately on the ground due to probe heating.

The procedures described in this document ensures an aerodynamically clean airplane before takeoff.

When operating in such conditions, these procedures account for operational hazards associated with frozen contamination. In all cases, it is assumed that the decision to operate is based on the general rules of good airmanship applicable in cold weather operations and on the assurance that the operational and system limitations will not be exceeded. Under these provisions, the procedures given in this data module have been provided to supplement the normal operating procedures with the goal of enhancing flight safety and assisting in obtaining maximum performance from the airplane. In no circumstances, however, do they warrant operations in conditions imposing demands beyond the capabilities of the airplane or its flight crew.

DEFINITIONS:

1 *Cold weather operations*
Cold weather operations refers to ground handling, takeoffs, and landings conducted on surface conditions where frozen moisture is present or conditions are conducive to moisture freezing. These conditions are commonly encountered when the surface temperature is at or below 0°C (32°F), although frozen moisture can be present and stay for a significant time at higher temperatures.

2 *Critical surfaces*
The critical surfaces of the airplane are defined as the wings, horizontal stabilizer, vertical stabilizer, control surfaces and engine inlets. If the upper surface of the fuselage is contaminated with ice, snow, or frost, and surface features and markings cannot be distinguished, the surface must be cleaned or deiced.
The fuselage is not considered a critical surface, but snow and ice on such a large surface could have considerable effect on drag and weight. Due diligence is required and consideration should be given to snow clearing and/or deicing the fuselage.

3 *Holdover time*
Holdover time is the published estimated time that an application of an approved deicing/anti-icing fluid is effective in preventing frost, ice, or snow from adhering to treated surfaces. Holdover time begins at the start of the final application of an approved deicing fluid, after

this time the fluid is no longer effective. After the holdover time is exceeded the aircraft must be re-inspected and another deice procedure may be required.
The tables presented in this document are extracted from: *Transport Canada Holdover Time (HOT) Guidelines*. These tables do not account for all factors that influence holdover time. Diverse and individually variable factors such as fluid temperature, relative humidity, wind direction and speed, can significantly shorten the holdover times shown in these tables.

4 *Contaminants*

4.1 Slush: is snow saturated with water which displaces with a splatter when stepped on firmly. It is encountered at temperatures up to 5°C (41°F).

4.2 Wet snow: it will easily stick together and tends to form a snowball if compacted by hand.

4.3 Dry snow: is loose and can easily be blown. If compacted by hand, it will readily fall apart again.

4.4 Frost: it forms from the slow deposition of ice crystals on cold surfaces, directly from water vapor in the air.
The frost forming surface must be below freezing temperatures for frost to form even though the ambient temperature may be above freezing. Frost appears as a white crystalline deposit that usually develops uniformly on exposed surfaces during below-freezing, calm and cloudless nights with a high ambient dewpoint. The deposit is thin enough for surface features underneath, such as paint lines, markings and lettering, to be distinguished.

4.5 Ice: two types of ice, rime ice and clear ice, commonly affect airplane operations:

- Rime ice
  Although rime ice is more commonly found in flight, it may occur on the ground when conditions are favorable. Rime ice may occur on the ground in low temperatures with a low concentration of small super-cooled water droplets and moderate winds. It appears as an opaque and rough ice surface that adheres to surfaces exposed to wind. It can easily be detected and is easily removed by application of deicing/anti-icing fluids.
- Clear ice
  Clear ice can occur in flight or on the ground. It forms at temperatures at or just below 0°C (32°F) with a high concentration of large super-cooled water droplets. Clear ice is hard, and appears as a smooth and glassy coating that can be very difficult to detect without a tactile inspection. Clear ice may not be seen during a walkaround, particularly if the wing is wet or during night time operations. Clear ice adheres firmly to surfaces and is difficult to remove, requiring special care during deicing/anti-icing.

4.6 Dehydrated deicing/anti-icing fluids: if deicing/anti-icing fluid is allowed to dry on airplane surfaces, this same fluid can become a contaminant.
Deicing, and especially anti-icing fluids are designed to adhere to airplane surfaces and shear off at speeds approaching takeoff speeds. If left on airplane surfaces for long periods of time (overnight), they may dehydrate and form a gel or dried deposit that will not shear off, even at high speeds. This contaminant will severely affect airplane performance and lift.

Note

Only approved personnel must do the deicing procedure to make sure that local regulations are followed.

These procedures are available for the deicing procedure:

- **Mechanical removal of loose contamination**
  If a significant amount of loose snow is on the airplane, the expenditure of a relatively large amount of deicing fluid can be avoided if the snow is removed mechanically. Using the wing broom to remove contamination does not always mean that the wing surface is clean and safe for flight. Every time a broom is used to remove contamination, a tactile inspection must be performed. Subject to the results of an inspection as outlined below (*Removal of loose contamination*), this may achieve complete deicing of the airplane.
- **One-step deicing/anti-icing**
  Fluid is applied in one step to remove frozen contamination and apply limited anti-ice protection. In this process, the residual fluid film, regardless of the type of fluid used, will provide only a very limited duration of anti-ice protection.
- **Two-step deicing/anti-icing**
  The two-step procedure is accomplished by first applying deicing fluid, consisting of heated pure water or a heated mixture of water and *Type I* fluid, and then applying undiluted *Type I* fluid. This method ensures extended anti-icing holdover time is available.

  1. The freezing point of a fluid used for the first step must not be more than 3°C above ambient temperature. The freezing point of an SAE *Type I* fluid used for a one-step process, or as the second step of a two-step.
     The freezing point of an SAE *Type I* fluid used for a one-step process, or as the second step of a two-step operation, must be at least 10°C (50 °F) below the ambient temperature. The second step is to be performed before the first step freezes, typically within 3 minutes. This time may be higher than 3 minutes in some conditions, but potentially lower in heavy precipitation, colder temperatures, or for critical surfaces constructed of composite materials. If necessary, the second step shall be applied area by area. When deicing fluid is used in one-step deicing/anti-icing, the application of the second step fluid will flush away the first step fluid and leave a film of anti-icing fluid, which is designed to be of adequate thickness. If freezing of the deicing fluid has occurred, one-step deicing/anti-icing must be repeated. This short period makes it necessary to deice/anti-ice relatively small areas of the airplane successively.
  2. Considering the nature of the precipitation present and the likely duration of the delay between the completion of the anti-icing step and takeoff, use the tables provided in this document.

DEICING FLUIDS:

The application of deicing/anti-icing fluid is the most common means of ground deicing and anti-ice protection. Anti-icing fluids are similar in composition except that they also contain polymeric thickeners. They are formulated to prevent formation of unabsorbed frozen contamination for a longer period of time than deicing fluids; however, the protection is still for a limited period of time. Although *Type I* fluids may be used for anti- icing, *Type II, III* and *Type IV* fluids are typically used in the anti-icing role because they can last for a significantly longer period of time than the *Type I* fluids.

The acceptable fluids are water/glycol solutions, classified as *Type I, II, III* and *Type IV*. The operator is ultimately responsible for ensuring that only fluids tested to SAE AMS 1424 or SAE AMS 1428 are applied when the HOT Guidelines will be utilized operationally. The Transport Canada Holdover Time Guidelines document, published on an annual basis, contains lists of

fluids that have been tested with respect to anti-icing performance (SAE AMS 1424 or SAE AMS 1428) and aerodynamic acceptance (SAE AMS 1424 or SAE AMS 1428) only.

- **Type I fluid:**
  In concentrated form, these fluids contain glycols to a minimum concentration of 80%, but with no thickening agents. Their resulting low viscosity and very short holdover times provide very limited anti-icing protection.
  It is apparent, that except for the case of frost or freezing fog, the duration of anti-icing protection provided by *Type I* fluid is inadequate unless takeoff can be made almost immediately after deicing. Therefore, if conditions require effective ground anti-icing, it is imperative that *Type II, III* and *Type IV* fluids.
- **Type II, III, and IV fluids:**
  Anti-icing fluids are similar in composition except that they also contain polymeric thickeners. They are formulated to prevent formation of unabsorbed frozen contamination for a longer period of time than deicing fluids; however, the protection is still for a limited period of time. Although *Type I* fluids may be used for anti- icing, *Type II, III* and *Type IV* fluids are typically used in the anti-icing role because they can last for a significantly longer period of time than the *Type I* fluids.

AIRFRAME CONTAMINATION:

Clean airplane concept

The clean airplane concept (aerodynamically clean) prohibits takeoff when frost, ice, snow, or other contaminants are present on the airplanes critical surfaces. The performance data for this airplane are based on the clean airplane concept. This means that all performance values are based on the airplane being aerodynamically clean prior to takeoff. Failure to remove contaminants will result in adverse effects on airplane performance and flight characteristics. These adverse effects can include the following:

- Decreased thrust
- Decreased lift
- Increased drag
- Increased stall speeds
- Trim changes
- Altered stall characteristics
- Altered handling qualities.

The removal procedures for frost, ice and snow from the surfaces of the airplane prior to takeoff, as described herein, depend upon the deicing facilities, methods and types of fluid available at the airports involved. Deicing must be accomplished at the last possible time prior to takeoff to maximize the time that will be able to provide protection (holdover time).

The general rule for ground icing procedures is that the deicing and anti-icing processes must be done symmetrically. That is, whatever final treatment (i.e. same brand name fluid) is administered on one wing must be applied to the other wing for aerodynamic symmetry reasons.

1 General precautions to be observed in cold weather operations:

1.1 It must never be assumed that an apparently dry and loose form of frozen moisture, for example, dry snow, will be removed by the slipstream during the initial takeoff roll. For instance, on an airplane removed from a warm hangar, a dry snowfall that remains free and uncompacted on the ground may melt and later refreeze to form ice that sticks to the surface of the airplane.

1.2 Before each flight, a thorough inspection of critical surfaces must be made to determine the extent of contamination on them. This inspection must be made by the pilot-in-command or by other trained and approved personnel qualified to report its results directly to the pilot-in-command. Deicing is part of flight operations and remains under the authority of the pilot-in-command.

1.3 After deicing, another inspection, subject to the same qualifications mentioned in paragraph above, must be made to confirm that all contamination is removed.

1.4 If during the period between the completion of deicing and takeoff there is the possibility that the airplane may again be contaminated, re-application of deicing *Type I* fluid must be provided. The period of effective anti-icing, known as holdover time, must be longer than the period between deicing and takeoff.
Holdover times start at the beginning of the deicing procedure.

1.5 If during the conditions described in paragraph above, takeoff cannot be started prior to the expiration of the holdover time; the airplane must again be inspected and deiced again if necessary, before attempting takeoff. If ice, snow or frost is found on the airplane, accomplishing a one-step deicing procedure will remove the contamination and provide limited anti-ice protection. When visible precipitation continues to fall, additional deicing application will be required. In such cases, the application of deicing fluid must be accomplished in two separate steps which will provide adequate protection in most environmental conditions.

2 Wet airplane and temperatures greater than 0°C (32°F) but less than 5°C (41°F)
Consideration of the following should be made as to whether a wet airplane should be deiced:

2.1 Conditions such as wind and forecast temperature. If temperatures are dropping or are forecast to drop, treatment with *Type I* fluid should be considered.

2.2 When an airplane is wet due to light rain or mist and the POP icing definition of visible moisture and less than 5°C (41°F) is satisfied. In such a situation, the airplane must be deiced before takeoff.

2.3 If the airplane is wet because it has been cleaned with hot water but there is no visible moisture in the air, then the wing is at the same risk of being contaminated as if the aircraft was taxiing in slush or pooled water on taxiways/runways. The use of wing deicing fluid is required for such conditions.

3 Clear ice due to cold fuel
Crew must be aware of the effect that cold fuel in the tanks may have on moisture present on the wing upper and lower surfaces. If fuel temperature is 0°C (32°F) or below, it is possible to have clear ice on the wing with the outside air temperature above freezing. If center tank fuel quantity exceeds 9525 kg (21000 lbs), or left or right wing fuel quantity exceeds 907 kg (2000 lbs), the fuel will be in contact with the upper wing skin.
If the fuel temperature is 0°C (32°F) or below and a high humidity condition exists or visible moisture in any form is present, pilots must ensure that the wing upper and lower surfaces are free of clear ice by means of a tactile check. Clear ice must be removed.

4 Frost due to cold soaked fuel
Wing frost caused by cold soaked fuel can form on the upper and lower surfaces of the wing even at outside air temperatures significantly above freezing. Frost on the upper and lower surfaces of the wing must be removed.

ENGINE CONTAMINATION:

Pre-flight considerations

A thorough and vigilant pre-flight inspection of the engines is required during cold weather operations. Engine cowl covers and inlet plugs should be used to protect from ice, sleet and snow contamination. While the use of covers and plugs is recommended, this equipment does not totally eliminate contamination of the engine inlet. Seepage from ice or snow melting on a warm but otherwise protected engine can cause contamination to form inside the inlet or on the fan blades once the ambient temperature causes the water to freeze again. The procedures that follow are designed to complement both regulatory and operational procedures during cold weather operations.

A thorough pre-flight should also include examination of the ramp conditions and whether or not deicing procedures are in effect. The flight crew should determine if ramp conditions permit engine starting while parked (at the gate) or during push back.

Note

Free fan rotation must be confirmed before engine start (manual rotation of the fan or engine dry motoring). Water may freeze in the area of the lower intake, jamming the adjacent fan blades. Only heated air shall be used to remove ice from the spinner, fan, inlet or other engine components.

Under no circumstance is it permissible to use deicing fluid to remove frozen precipitation from the spinner, fan, inlet or other engine components.

Do not remove ice and snow by chipping and scraping. The only acceptable practice is the use of heated air on engine components or deicing fluid on the exterior engine cowling only.

Note

Deicing/anti-icing fluids that are ingested into the engine can have a corrosive and contaminating effect. This effect may degrade fan blade lubricants (causing increased Nf vibrations), resulting in increased maintenance costs. Other potential effects include impeding the correct operation of bleed valves by forming a sticky residue, clogging engine probes and creating noxious fumes. Care should be exercised when applying deicing fluid in the vicinity of the engine inlet. Consideration should be given to reducing engine water (compressor) wash intervals during cold weather operations.

Should deicing/anti-icing be inadvertently applied into the engine inlet area, it should be communicated to Pratt and Whitney prior to engine start. If the engine was running when the fluid was sprayed directly into the inlet, the engine should be shut down normally.

For ice removal on other engine surfaces, for personal safety, engines should not be operating. However, if necessary, this may be accomplished with the engines operating at IDLE speed using a low pressure stream of glycol-based deicing fluid exercising care to avoid spraying fluids directly into the engine inlet (use indirect method).

Preliminary requirements

Required conditions

Table 2 Required conditions

Action/Condition	Data Module/Technical publication
Make sure that all protective covers are removed.	

Support equipment

Table 3 Support equipment

Name	Identification/Reference	Quantity	Remark
None			

Consumables, materials, and expendables

Table 4 Consumables, materials, and expendables

Name	Identification/Reference	Quantity	Remark
None			

Spares

Table 5 Spares

Name	Identification/Reference	Quantity	Remark
None			

Safety conditions

None

Procedure

CAUTIONS

- **Deicing with the APU operating is not recommended. Ingestion of fluid can contaminate the air conditioning system and cause fumes and odors to go into the airplane. This can cause throat irritation to personnel and irregular operation and possible damage to the APU.**
- **On flight control surfaces, always apply fluid from the leading edge to the trailing edge and from the outer panels to the inner panels. The spray can push contamination not melted into hinge mechanisms and below the control shrouds. This contamination can refreeze in these areas.**
- **Fluids used during ground deicing/anti-icing do not supply in-flight icing protection.**

1 **Removal of loose contamination:**

If significant amounts of loose snow are on the airplane.

1.1 Keep the slats/flaps lever (Fig. 4) in the current position.

Note

If you move the slats/flaps it can contaminate the actuators.

Note

Remove the snow for a clear view of the areas to be examined.

Note

During snowfall, freezing rain and drifting snow, it is possible for snow and melting ice to penetrate into hinges, operating linkages, drainage openings and vents, and then refreeze. The mentioned areas should be checked with diligence.

1.2 Examine the areas that follow for adherence ice, frost or snow:

- Wings - leading edges, upper and lower surfaces, winglets
- Upper fuselage
- Vertical and horizontal stabilizers - leading edges, upper/lower surfaces, and side panels
- Flaps, flap tracks, and flap drives
- Slats, slat tracks, and slat drives
- Ailerons, elevators, rudder, spoilers
- Air data probes/sensors, Angle of Attack (AOA) vanes and surrounding areas within a distance of 61 cm (2 ft.)
- Antennas
- Fuel drains and National Advisory Committee for Aeronautics (NACA) vent scoops
- Engine and Auxiliary Power Unit (APU) intakes, APU exhaust
- Landing gear and landing gear bays
- Windshield, wipers, windows, door sills, and surrounds.

1.3 Touch the surfaces with bare hands to make sure that there is no ice formation (tactile check).

1.4 Do the one-step, or two-steps, deicing/anti-icing procedure if you find frozen contamination in critical surfaces.

2 **Preparation for deicing/anti-icing:**

2.1 Before fluid is applied:

2.1.1 Accomplish all items in the “After start procedure“, except **DO NOT** extend flaps or check flight controls.

2.1.2 Park the airplane with the nose into the wind, if possible.

2.1.3 Set the park brake (Fig. 1) to the ON position.

2.1.4 Put the thrust levers (Fig. 4) in idle position.

Note

It is recommended that the application of deicing fluid be carried out with the engines and APU OFF. If not possible, the APU and engine bleed shutoff valves must be closed.

Make sure that the personnel that apply the deicing fluid know the location of the APU air intake to prevent contamination by the fluid.

2.1.5 Set the engine run switches (Fig. 6) to the OFF position (for engines off).

2.1.5.1 If engines are on, close the engines shutoff valves.

2.1.6 Set the APU switch to the OFF position, if required.

2.1.6.1 If the APU is on, close the APU shutoff valve.

2.1.7 Make sure that the APU door is closed (if APU is off).

2.1.8 On the air control panel, set the systems below to the OFF position:

- Left (side) (L) pack
- Right (side) (R) pack
- L bleed
- R bleed
- APU bleed.

2.1.9 On the anti-ice control panel, set the systems below to the OFF position:

- L cowl
- Wing
- R cowl.

2.1.10 Set the wipers (Fig. 2) to the OFF position.

2.1.11 Stab trim - set to 5 units.

2.1.12 Set the slats/flaps (Fig. 4) in released position.

3 **Deicing/anti-icing:**

CAUTION

If ice pellet precipitation occurs after the application of deicing fluid, the deicing fluid dilutes and cause wing contamination.

3.1 Do not apply the deicing fluid jet directly on these areas:

Refer to Fig. 8 , Fig. 9 , and Fig. 10.

- Windshields, Flight Crew Emergency Escape (FCEE) hatch, side windows, and cabin windows
- Smart probes and TAT probes
- AOA vanes
- Engine air intake (to prevent ingestion), engine exhaust, engine thrust reverser, engine bleed ducts
- APU inlet and APU exhaust (Especially important with APU ON)
- Antennas
- Vents and drains
- Wheels and brakes.

3.2 Application of fluid should follow the sequence below:

1 Vertical stabilizer

2 Horizontal stabilizer

3 Top of fuselage

4 Wings.

4 **After deicing spraying:**

4.1 Inspect the areas listed below, to confirm complete deicing:

- Wings - upper and lower surfaces, pay particular attention to the leading edges
- Upper fuselage
- Vertical and horizontal stabilizers - leading edges, upper/lower surfaces, and side panels
- Flaps, flap tracks, and flap drives
- Slats, slat tracks, and slat drives
- Ailerons, elevators, rudder, spoilers
- Air data probes/sensors, AOA vanes and surrounding areas within a distance of 2 feet
- Antennas
- Fuel drains and NACA vent scoops
- Engine and APU intakes, APU exhaust
- Landing gear and landing gear bays
- Windshields, windows, door sills, and surrounds.

4.2 At least 1 minute following deicing:

4.2.1 On the air control panel, set the systems below to the AUTO position:

- L bleed
- R bleed
- APU bleed.

4.2.2 Set wipers as required. Refer to Fig. 2 .

4.2.3 Check flight controls.

4.2.4 Set SLAT/FLAP lever (Fig. 4) for takeoff configuration.

4.2.5 Set STAB TRIM for takeoff configuration.

4.3 At least 3 minutes following deicing:

4.3.1 Start the APU (or confirm it is ON), as applicable. Refer to Fig. 3 .

4.3.2 On the air control panel, set the systems below to the AUTO position:

- L pac
- R pack.

4.3.3 On the anti-ice control panel, set the systems below as required:

- L cowl
- Wing
- R cowl.

4.3.4 Check for takeoff configuration.

4.3.5 Complete the “Before Takeoff Check“.

5 **Tables:**

Table 6 Active frost - Holdover guidelines for fluid Type I

Outside air temperature [1, 2] °C (°F)	**Approximate holdover times (hours:minutes)**
	Active frost
	Type I
-1 (30) and above	0:45 (0:35) [3]
below -1 (30) to -3 (27)	
below -3 (27) to -10 (14)	
below -10 (14) to -14 (7)	
below -14 (7) to -21 (-6)	
below -21 (-6) to LOUT	

Outside air temperature [1, 2] °C (°F)	Approximate holdover times (hours:minutes)
	Active frost
	Type I

CAUTION

Fluids used during ground deicing/anti-icing do not supply in-flight icing protection.

Note

The holdover time can be lower in these conditions:

- Heavy weather conditions, heavy precipitation rates or high moisture contents.
- When the airplane skin temperature is lower than OAT.
- With high wind velocity or jet blast.

1 Type I fluid / water mixture must be selected so that the freezing point of the mixture is at least 10°C (18°F) below outside air temperature.

2 Ensure that the Lowest Operational Use Temperature (LOUT) is respected.

3 Value in parenthesis is for composite surfaces

Table 7 Active frost - Holdover guidelines for fluid Type II, Type III, and Type IV

Outside air temperature [1] °C (°F)	Concentration neat fluid/water (Volume % / %)	Approximate holdover times (hours:minutes)		
		Active frost		
		Type II	Type III	Type IV
-1 (30) and above	100/0	8:00	2:00	12:00
	75/25	5:00	1:00	5:00
	50/50	3:00	0:30	3:00
below -1 (30) and -3 (27)	100/0	8:00	2:00	12:00
	75/25	5:00	1:00	5:00
	50/50	1:30	0:30	3:00
below -3 (27) and -10 (14)	100/0	8:00	2:00	10:00
	75/25	5:00	1:00	5:00
below -10 (14) and -14 (7)	100/0	6:00	2:00	6:00
	75/25	1:00	1:00	1:00
below -14 (7) and -21 (-6)	100/0	6:00	2:00	6:00

Outside air temperature [1] °C (°F)	Concentration neat fluid/water (Volume % / %)	Approximate holdover times (hours:minutes)		
		Active frost		
		Type II	Type III	Type IV
below -21 (-6) and -25 (-13)	100/0	2:00	2:00	4:00
below -25 (-13)	100/0	No holdover time guidelines exist		

CAUTION

Fluids used during ground deicing/anti-icing do not supply in-flight icing protection.

Note

The holdover time can be lower in these conditions:

- Heavy weather conditions, heavy precipitation rates or high moisture contents.
- When the airplane skin temperature is lower than OAT.
- With high wind velocity or jet blast.

1 Ensure that the LOUT is respected.

Table 8 SAE TYPE I - Fluid holdover guidelines on critical aircraft surfaces composed predominantly of aluminum [1]

This table applies to aircraft with critical surfaces constructed predominantly or entirely of aluminum materials that have demonstrated satisfactory use of these holdover times.

Outside air temperature [2] °C (°F)	Approximate holdover times under various weather conditions (minutes)							
	Freezing fog or ice crystals	Snow, snow grains or snow pellets [3]			Freezing drizzle [4]	Light freezing rain	Rain on cold soaked wing [5]	Other [6]
		Very light [7]	Light [8]	Moderate				
-3 (27) and above	11 - 17	18	11 - 18	6 - 11	9 - 13	4 - 6	2 - 5	
below -3 (27) to -6 (21)	8 - 13	14	8 - 14	5 - 8	5 - 9	4 - 6	**CAUTION:** No holdover time guidelines exist	
below -6 (21) to -10 (14)	6 - 10	11	6 - 11	4 - 6	4 - 7	2 - 5		
below -10 (14)	5 - 9	7	4 - 7	2 - 4				

This table applies to aircraft with critical surfaces constructed predominantly or entirely of aluminum materials that have demonstrated satisfactory use of these holdover times.

Outside air temperature [2] °C (°F)	Approximate holdover times under various weather conditions (minutes)							
	Freezing fog or ice crystals	Snow, snow grains or snow pellets [3]			Freezing drizzle [4]	Light freezing rain	Rain on cold soaked wing [5]	Other [6]
		Very light [7]	Light [8]	Moderate				

CAUTION

Fluids used during ground deicing/anti-icing do not supply in-flight icing protection.

Note

The holdover time can be lower in these conditions:

- Heavy weather conditions, heavy precipitation rates or high moisture contents.
- When the airplane skin temperature is lower than OAT.
- With high wind velocity or jet blast.

Note

The only acceptable decision-making criterion, for takeoff without a pre-takeoff contamination inspection, is the shorter time within the applicable holdover time table cell.

1 Type I fluid / water mixture must be selected so that the freezing point of the mixture is at least 10°C (18°F) below outside air temperature.

2 Ensure that the LOUT is respected.

3 To determine snowfall intensity, the visibility in snow vs. snowfall intensity table (Table 12) is required.

4 Use light freezing rain holdover times if positive identification of freezing drizzle is not possible.

5 No holdover time guidelines exist for this condition for 0°C (32°F) and below.

6 Heavy snow, ice pellets, moderate and heavy freezing rain, small hail and hail.

7 Use light freezing rain holdover times in conditions of very light or light snow mixed with light rain.

8 Use light freezing rain holdover times in conditions of very light or light snow mixed with light rain.

Table 9 SAE TYPE I - Fluid holdover guidelines on composite wing surfaces [1]

These holdover times apply to newer aircraft with critical surfaces constructed predominantly or entirely of composite materials.

Outside air temperature [2] °C (°F)	Approximate holdover times under various weather conditions (minutes)							
	Freezing fog or ice crystals	Snow, snow grains or snow pellets [3]			Freezing drizzle [4]	Light freezing rain	Rain on cold soaked wing [5]	Other [6]
		Very light [7]	Light [7]	Moderate				
-3 (27) and above	9 - 16	12	6 - 12	3 - 6	8 - 13	4 - 6	1 - 5	
below -3 (27) to -6 (21)	6 - 8	11	5 - 11	2 - 5	5 - 9	4 - 6	**CAUTION:** No holdover time guidelines exist	
below -6 (21) to -10 (14)	4 - 8	9	5 - 9	2 - 5	4 - 7	2 - 5		
below -10 (14)	4 - 7	7	4 - 7	2 - 4				

CAUTION

Fluids used during ground deicing/anti-icing do not supply in-flight icing protection.

Note

The holdover time can be lower in these conditions:

- Heavy weather conditions, heavy precipitation rates or high moisture contents.
- When the airplane skin temperature is lower than OAT.
- With high wind velocity or jet blast.

Note

The only acceptable decision-making criterion, for takeoff without a pre-takeoff contamination inspection, is the shorter time within the applicable holdover time table cell.

1 Type I fluid / water mixture must be selected so that the freezing point of the mixture is at least 10°C (18°F) below outside air temperature.

2 Ensure that the LOUT is respected.

3 To determine snowfall intensity, the visibility in snow vs. snowfall intensity table (Table 12) is required.

4 Use light freezing rain holdover times if positive identification of freezing drizzle is not possible.

5 No holdover time guidelines exist for this condition for 0°C (32°F) and below.

6 Heavy snow, ice pellets, moderate and heavy freezing rain, small hail and hail.

7 Use light freezing rain holdover times in conditions of very light or light snow mixed with light rain.

Table 10 SAE TYPE I - Deicing / anti-icing fluid application procedures

<table>
<tr><th colspan="4">Guidelines for the application of SAE Type I fluid mixtures at minimum concentrations for the prevailing outside air temperature (OAT)</th></tr>
<tr><th rowspan="2">OAT [1]
°C (°F)</th><th rowspan="2">One-step procedure deicing/anti-icing</th><th colspan="2">Two-step procedure</th></tr>
<tr><th>First step: Deicing</th><th>Second step: Anti-icing [2]</th></tr>
<tr><td>-3 (27) and above</td><td rowspan="2">Heated mix of fluid and water with a freezing point of at least 10°C (18°F) below OAT</td><td>Heated water or heated mix of fluid and water</td><td rowspan="2">Heated mix of fluid and water with a freezing point of at least 10°C (18°F) below OAT</td></tr>
<tr><td>below -3 (27)</td><td>Freezing point of heated fluid mixture shall not be more than 3°C (5°F) above OAT</td></tr>
<tr><td colspan="4">Note
Temperature of water or fluid/water mixtures shall be at least 60°C (140°F) at the nozzle. Upper temperature limit shall not exceed fluid and aircraft manufactures' recommendations.
Note
To use Type I holdover time guidelines in all conditions including active frost, at least 1 litre/m² (2 gal / 100 sq.ft.) shall be applied to the deiced surface.
Note
This table is applicable for the use of Type I holdover time guidelines in all conditions including active frost. If holdover times are not required, a temperature of 60°C (140°F) at the nozzle is desirable.
Note
The LOUT for given Type II/III/IV fluid is higher of:
a) The lowest temperature at which the fluid meets the aerodynamic acceptance test for a given aircraft type; or
b) The actual freezing point of the fluid plus its freezing point buffer of 7°C (13°F).
Note
Wing skin temperatures may differ and, in some conditions, can be below the OAT. Use a stronger fluid mixture (more glycol) in this condition.</td></tr>
<tr><td colspan="4">1 Fluids must be used at temperatures below their LOUT
2 To be applied before first step fluid freezes, typically within 3 minutes. (this time may be higher than 3 minutes in some conditions, but potentially lower in heavy precipitation, colder temperatures, or critical surfaces constructed of composite materials. If necessary, the second step shall be applied area by area.)</td></tr>
</table>

Table 11 SAE TYPE II, TYPE III and TYPE IV - Deicing / anti-icing fluid application procedures

Guidelines for the application of SAE Type II, III and IV fluid mixtures at minimum concentrations for the prevailing outside air temperature (OAT)			
OAT [1] °C (°F)	**One-step procedure deicing/anti-icing**	**Two-step procedure**	
		First step: Deicing	**Second step: Anti-icing [2]**
-3 (27) and above	50/50 Heated[3] Type II/III/IV	Heated water or heated mix of Type I, II, III or IV with water	50/50 Type II/III/IV
-14 (7) and above	75/25 Heated[3] Type II/III/IV	Heated suitable mix of Type I, Type II/III/IV and water with FP not more than 3°C (5°F) above actual OAT.	75/25 Type II/III/IV
-25 (13) and above	100/0 Heated[3] Type II/III/IV	Heated suitable mix of Type I, Type II/III/IV and water with FP not more than 3°C (5°F) above actual OAT.	100/0 Type II/III/IV
below -25 (13)	Type II/III/IV fluid may be used below -25°C (-13°F) provided that the OAT is at or above the LOUT. Consider the use of Type I when Type II/III/IV fluid cannot be used.		

Guidelines for the application of SAE Type II, III and IV fluid mixtures at minimum concentrations for the prevailing outside air temperature (OAT)			
OAT [1] °C (°F)	**One-step procedure deicing/anti-icing**	**Two-step procedure**	
		First step: Deicing	**Second step: Anti-icing [2]**
Note For heated fluids, a fluid temperature not less than 60°C (140°F) at the nozzle is desirable. When the first step is performed using a fluid/water mix with a freezing point above OAT, the temperature at the nozzle shall be at least 60°C and at least 1 litre/m² (2 gal / 100 sq.ft.) shall be applied to the surfaces to be deiced. For fluids which require a heated application to obtain holdover times (this is stated in the applicable holdover time table), the temperature at the nozzle shall be at least 60°C and at least 1 litre/m² (2 gal / 100 sq.ft.) shall be applied. **Note** Upper temperature limit shall not exceed fluid and aircraft manufactures' recommendations. **Note** The LOUT for given Type II/III/IV fluid is higher of: a) The lowest temperature at which the fluid meets the aerodynamic acceptance test for a given aircraft type; or b) The actual freezing point of the fluid plus its freezing point buffer of 7°C (13°F). **Note** Wing skin temperatures may differ and, in some conditions, can be below the OAT. Use a stronger fluid mixture (more glycol) in this condition. **Note** Whenever frost or ice occurs on the lower surface of the wing in the area of the fuel tank, indicating a cold soaked wing, the 50/50 dilution of Type II, III or IV shall not be used for the anti-icing step because fluid freezing may occur. **Note** An insufficient amount of anti-icing fluid, especially in the second step of a two-step procedure, may cause a substantial loss of holdover time. This is particularly true when using a Type I fluid for the first step.			
1 Fluids must be used at temperatures below their LOUT 2 To be applied before first step fluid freezes, typically within 3 minutes. (this time may be higher than 3 minutes in some conditions, but potentially lower in heavy precipitation, colder temperatures, or critical surfaces constructed of composite materials. If necessary, the second step shall be applied area by area.) 3 Clean aircraft may be anti-iced with unheated fluid, unless the related holdover time table requires a heated application to obtain holdover times.			

Table 12 Visibility in snow vs. snowfall intensity chart

Lighting	Temperature range	Visibility in snow (statute miles)			
	°C (°F)	Heavy	Moderate	Light	Very light
Darkness	-1 (30) and above	= 1	> 1 to 2½	> 2½ to 4	> 4

	Below -1 (30)	= 3/4	> 3/4 to 1½	> 1½ to 3	> 3
Daylight	-1 (30) and above	= 1/2	>½ to 1½	> 1½ to 3	> 3
	Below -1 (30)	= 3/8	> 3/8 to 7/8	> 7/8 to 2	> 2
HOW TO READ THE TABLE: Assume that the daytime visibility in snowfall is 1 statute mile and the temperature is -7°C. Based on these conditions, the snowfall intensity is light. This snowfall intensity is used to determine which holdover time guideline value is appropriate for the fluid in use.					

Table 13 SAE TYPE II - Fluid holdover time guidelines

Outside air temperature [1] °C (°F)	**Type II fluid concentration neat Fluid/Water Volume %/ Volume %**	**Approximate holdover times under various weather conditions (hours:minutes)**					
		Freezing fog or ice crystals	**Snow, snow grains or snow pellets [2, 3]**	**Freezing drizzle [4]**	**Light freezing rain**	**Rain on cold soaked wing [5]**	**Other [6]**
-3 (27) and above	100/0	0:35 - 1:30	0:20 - 0:45	0:30 - 1:00	0:15 - 0:30	0:07 - 0:40	
	75/25	0:25 - 1:00	0:15 - 0:30	0:20 - 0:45	0:10 - 0:25	0:05 - 0:25	
	50/50	0:15 - 0:30	0:05 - 0:15	0:10 - 0:20	0:05 - 0:10	**CAUTION:** No holdover time guidelines exist	
below -3 (27) to -14 (7)	100/0	0:20 - 1:05	0:15 - 0:30	0:20 - 0:45 [7]	0:10 - 0:20 [7]		
	75/25	0:25 - 0:50	0:08 - 0:20	0:15 - 0:30 [7]	0:08 - 0:15 [7]		
below -14 (7) to LOUT	100/0	0:15 - 0:35 [8]	0:15 - 0:30 [8]				

Outside air temperature [1] °C (°F)	Type II fluid concentration neat Fluid/Water Volume %/ Volume %	Approximate holdover times under various weather conditions (hours:minutes)					
		Freezing fog or ice crystals	Snow, snow grains or snow pellets [2, 3]	Freezing drizzle [4]	Light freezing rain	Rain on cold soaked wing [5]	Other [6]

CAUTION

Fluids used during ground deicing/anti-icing do not supply in-flight icing protection.

Note

The holdover time can be lower in these conditions:

- Heavy weather conditions, heavy precipitation rates or high moisture contents.
- When the airplane skin temperature is lower than OAT.
- With high wind velocity or jet blast.

Note

The only acceptable decision-making criterion, for takeoff without a pre-takeoff contamination inspection, is the shorter time within the applicable holdover time table cell.

1 Ensure that the LOUT is respected.

2 To determine snowfall intensity, the visibility in snow vs. snowfall intensity table (Table 12) is required.

3 Use light freezing rain holdover times in condition of very light or light snow mixed with light rain.

4 Use light freezing rain holdover times if positive identification of freezing drizzle is not possible.

5 No holdover time guidelines exist for this condition for 0°C (32°F) and below.

6 Heavy snow, ice pellets, moderate and heavy freezing rain, small hail and hail.

7 No holdover time guidelines exist for this condition below -10°C (14°F).

8 If the LOUT is unknown, no holdover time guidelines exist below -25°C (-13°F).

Table 14 SAE TYPE IV - Fluid holdover time guidelines

Outside air temperature [1] °C (°F)	Type II fluid concentration neat Fluid/Water Volume %/ Volume %	Approximate holdover times under various weather conditions (hours:minutes)					
		Freezing fog or ice crystals	Snow, snow grains or snow pellets [2, 3]	Freezing drizzle [4]	Light freezing rain	Rain on cold soaked wing [5]	Other [6]
-3 (27) and above	100/0	1:30 - 2:25	0:35 - 1:10	0:50 - 1:30	0:35 - 0:50	0:10 - 1:25	
	75/25	1:25 - 2:40	0:30 - 1:05	0:50 - 1:15	0:30 - 0:45	0:09 - 1:15	
	50/50	0:25 - 0:40	0:09 - 0:15	0:15 - 0:25	0:09 - 0:15		
below -3 (27) to -14 (7)	100/0	0:20 - 1:20	0:25 - 0:50	0:25 - 1:10 [7]	0:15 - 0:25 [7]		
	75/25	0:25 - 0:50 [8]	0:20 - 0:40 [8]	0:15 - 1:05 [, 8]	0:15 - 0:25 [, 8]		
below -14 (7) to LOUT	100/0	0:15 - 0:40 [9]	0:15 - 0:30 [9]				

CAUTION: No holdover time guidelines exist

CAUTION

Fluids used during ground deicing/anti-icing do not supply in-flight icing protection.

Note

The holdover time can be lower in these conditions:

- Heavy weather conditions, heavy precipitation rates or high moisture contents.
- When the airplane skin temperature is lower than OAT.
- With high wind velocity or jet blast.

Note

The only acceptable decision-making criterion, for takeoff without a pre-takeoff contamination inspection, is the shorter time within the applicable holdover time table cell.

1 Ensure that the LOUT is respected.

2 To determine snowfall intensity, the visibility in snow vs. snowfall intensity table (Table 12) is required.

3 Use light freezing rain holdover times in condition of very light or light snow mixed with light rain.

4	Use light freezing rain holdover times if positive identification of freezing drizzle is not possible.
5	No holdover time guidelines exist for this condition for 0°C (32°F) and below.
6	Heavy snow, ice pellets, moderate and heavy freezing rain, small hail and hail.
7	No holdover time guidelines exist for this condition below -10°C (14°F).
8	If the LOUT is unknown, no holdover time guidelines exist below -5.5°C (-22.1°F).
9	If the LOUT is unknown, no holdover time guidelines exist below -23.5°C (-10.3°F).

Table 15 SAE TYPE III - Fluid ice pellet and small hail allowance times

This table is for use with SAE Type III undiluted (100/0) fluids applied unheated only1

Precipitation type	**Outside Air Temperature**		
	-5°C and above	**Below -5 to -10°C**	**Below -10°C** 2
Light ice pellets	**10 minutes**	**10 minutes**	
Moderate ice pellets or small hail 3	5 minutes	5 minutes	
Light ice pellets mixed with light or moderate freezing drizzle	7 minutes	5 minutes	
Light ice pellets mixed with light rain	7 minutes 4	**CAUTION:** No allowance times currently exist	
Light ice pellets mixed with moderate rain			
Light ice pellets mixed with light snow	10 minutes	10 minutes	
Light ice pellets mixed with moderate snow	10 minutes	10 minutes	

CAUTION

Fluids used during ground deicing/anti-icing do not supply in-flight icing protection.

Note

The holdover time can be lower in these conditions:

- Heavy weather conditions, heavy precipitation rates or high moisture contents.
- When the airplane skin temperature is lower than OAT.
- With high wind velocity or jet blast.

Note

The only acceptable decision-making criterion, for takeoff without a pre-takeoff contamination inspection, is the shorter time within the applicable holdover time table cell.

1	No allowance times exist for AllClear AeroClear MAX.
2	Ensure that the lowest operational use temperature (LOUT) is respected.

3	If no intensity is reported with small hail, moderate ice pellets allowance times apply. However, if an intensity is reported with small hail, the ice pellet condition with the equivalent intensity can be used, e.g. light small hail = light ice pellets, moderate small hail = moderate ice pellets.
4	No allowance times exist in this condition for temperatures below 0°C; consider use of light ice pellets mixed with light freezing rain.

Table 16 SAE TYPE IV - Fluid ice pellet and small hail allowance times

This table is for use with SAE Type IV undiluted (100/0) fluids only. All Type IV fluids are propylene glycol based with the exception of Dow EG106 and LNT Solutions E450 which are ethylene glycol based.

Precipitation type	**Outside Air Temperature**		
	-5°C and above	**Below -5 to -10°C**	**Below -10°C** 1
Light ice pellets	**50 minutes**	**30 minutes**	**30 minutes** 2
Moderate ice pellets or small hail 3	25 minutes 4	10 minutes	10 minutes 2, 5
Light ice pellets mixed with light or moderate freezing drizzle	25 minutes	10 minutes	
Light ice pellets mixed with light freezing rain	25 minutes	10 minutes	
Light ice pellets mixed with light rain	25 minutes 6	**CAUTION:** No allowance times currently exist	
Light ice pellets mixed with moderate rain	25 minutes 7		
Light ice pellets mixed with light snow	25 minutes	15 minutes	
Light ice pellets mixed with moderate snow	10 minutes	7 minutes	

CAUTION

Fluids used during ground deicing/anti-icing do not supply in-flight icing protection.

Note

Allowance time cannot be extended by an inspection of the aircraft critical surfaces.

Note

Takeoff is allowed up to 90 minutes after start of fluid application if the precipitation stops at or before the allowance time expires and does not restart. The OAT must not decrease during the 90 minutes to use this guidance in conditions of light ice pellets mixed with either: light or moderate freezing drizzle, light freezing rain, light rain, or moderate rain.

1	Ensure that the lowest operational use temperature (LOUT) is respected.
2	No allowance times exist for propylene glycol (PG) fluids when used on aircraft with rotation speeds less than 115 knots. (For these aircraft, if the fluid type is not known, assume zero allowance time.)
3	If no intensity is reported with small hail, moderate ice pellets allowance times apply. However, if an intensity is reported with small hail, the ice pellet condition with the equivalent intensity can be used, e.g. light small hail = light ice pellets, moderate small hail = moderate ice pellets.
4	Allowance time is 15 minutes for propylene glycol (PG) fluids or when the fluid type is unknown.
5	No allowance times exist for propylene glycol (PG) fluids in this condition for temperatures below -16°C.
6	No allowance times exist in this condition for temperatures below 0°C; consider use of light ice pellets mixed with light freezing rain.
7	No allowance times exist in this condition for temperatures below 0°C.

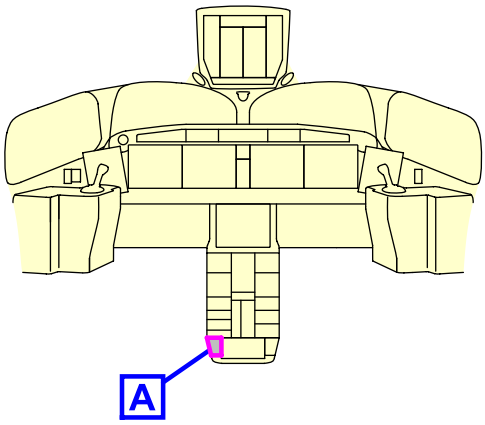

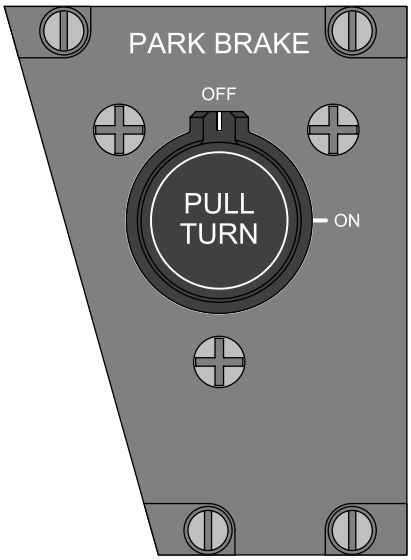

PARKING BRAKE PANEL

A

ICN-BD500-A-J320000-C-3AB48-06936-A-001-01

Figure 1 Park break panel

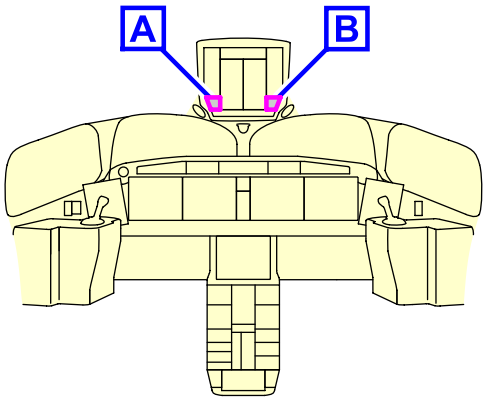

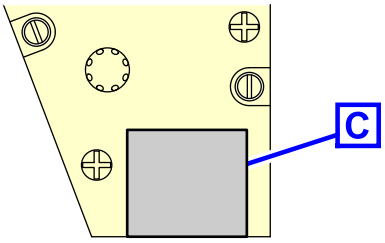

WIPER PANEL

A

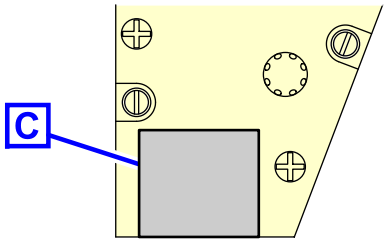

WIPER PANEL

B

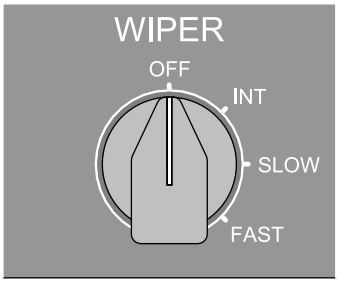

WIPER SWITCH

C

ICN-BD500-A-J300000-C-3AB48-06163-A-003-01

Figure 2 Wiper control switch

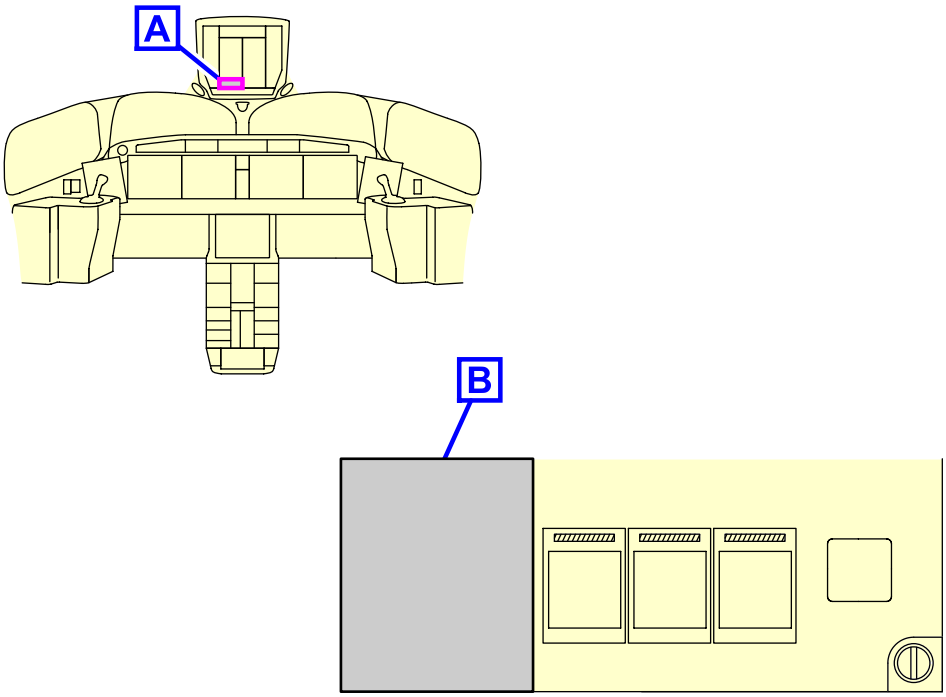

APU AND TAWS CONTROL PANEL

A

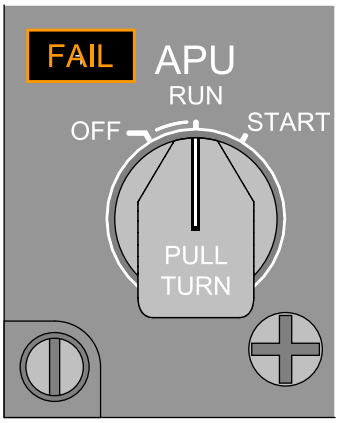

APU SWITCH

B

ICN-BD500-A-J490000-C-3AB48-06181-A-002-01

Figure 3 APU control panel

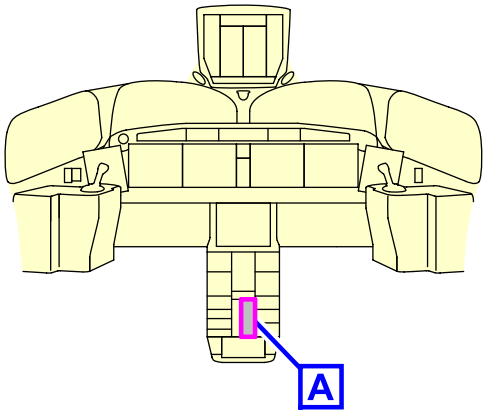

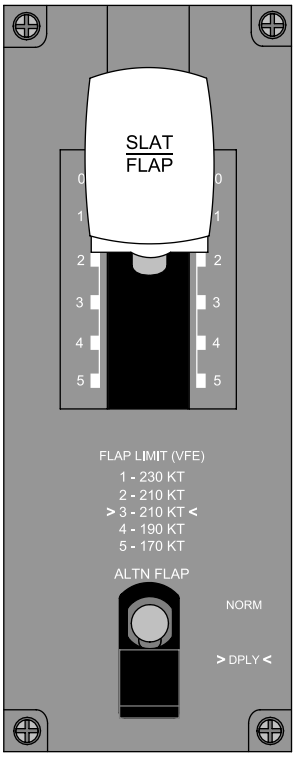

SLAT/FLAP CONTROL PANEL

A

ICN-BD500-A-J270000-C-3AB48-07501-A-003-01

Figure 4 Slats/flaps panel

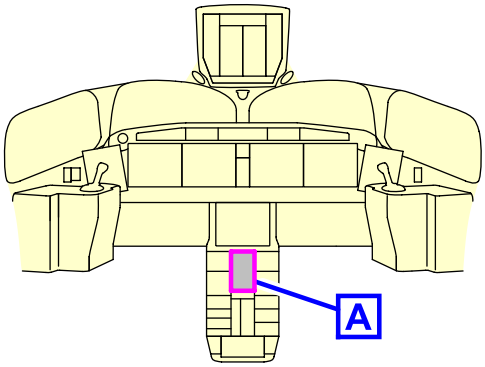

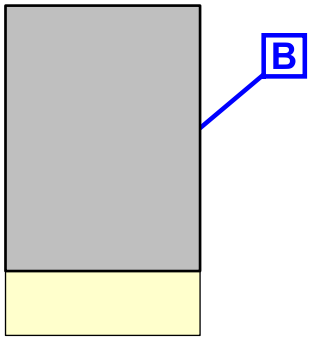

A

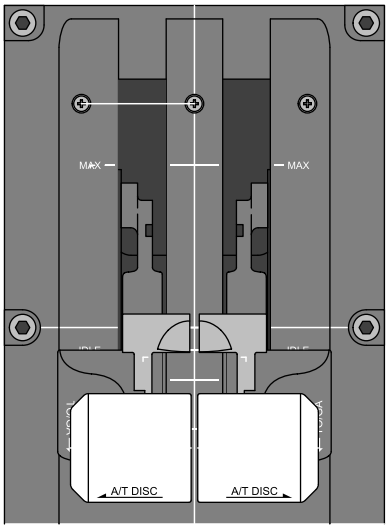

THROTTLE QUADRANT

B

ICN-BD500-A-J761100-C-3AB48-16517-A-001-01

Figure 5 Throttle control system

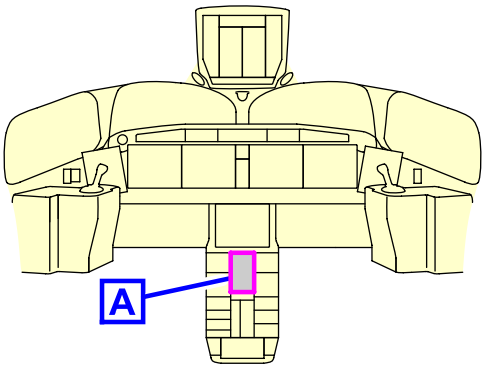

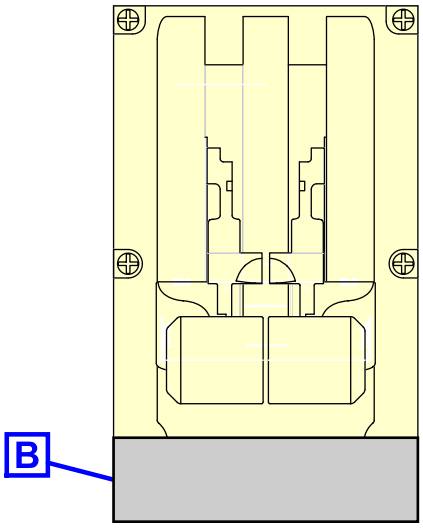

THROTTLE QUADRANT ASSEMBLY CONTROL PANEL

A

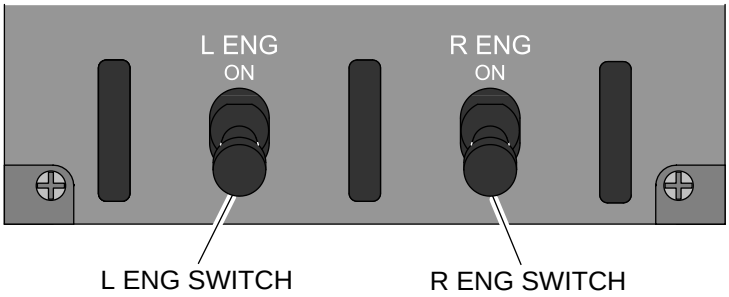

B

ICN-BD500-A-J740000-C-3AB48-09873-A-002-01

Figure 6 Ignition system

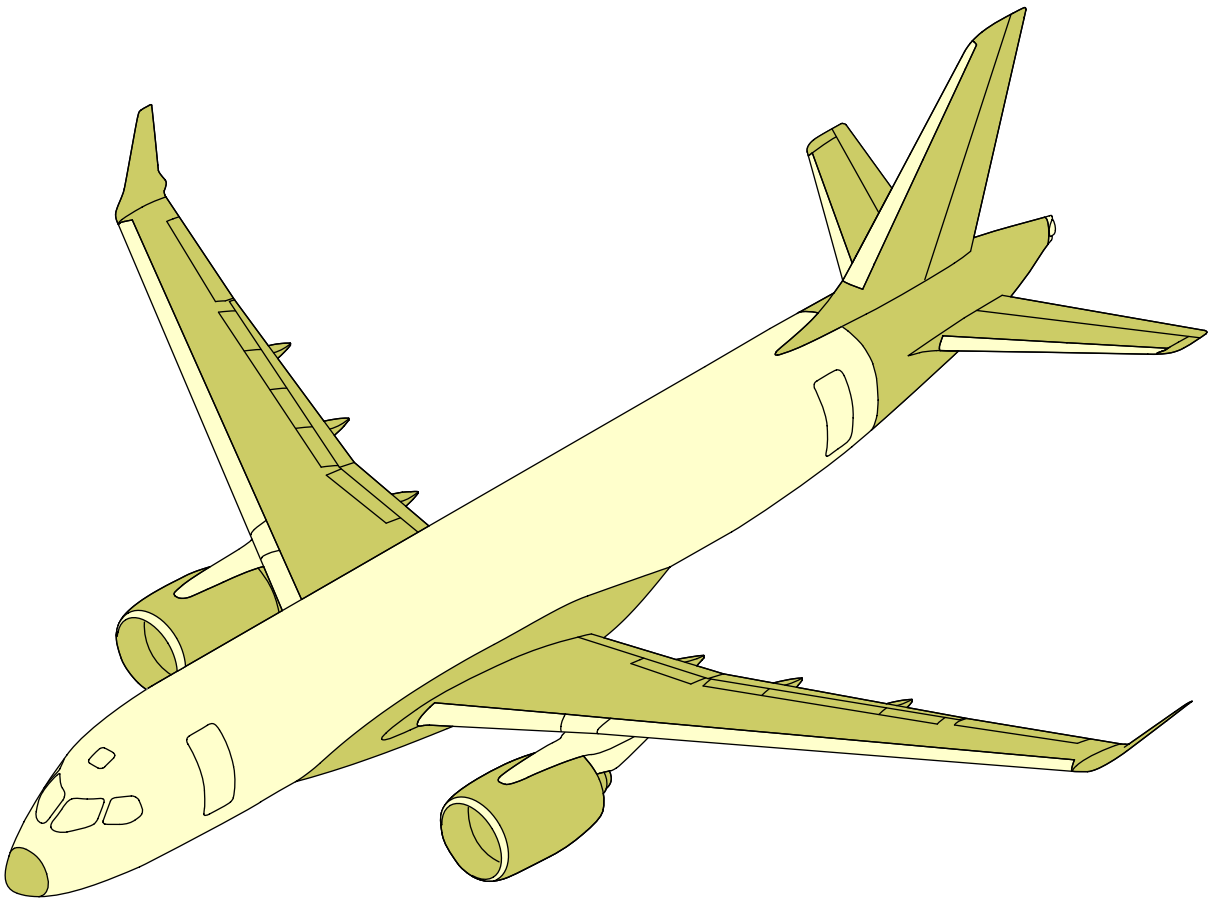

LEGEND

Composite.

ICN-BD500-A-J079500-C-3AB48-24022-A-001-01

Figure 7 Composite materials

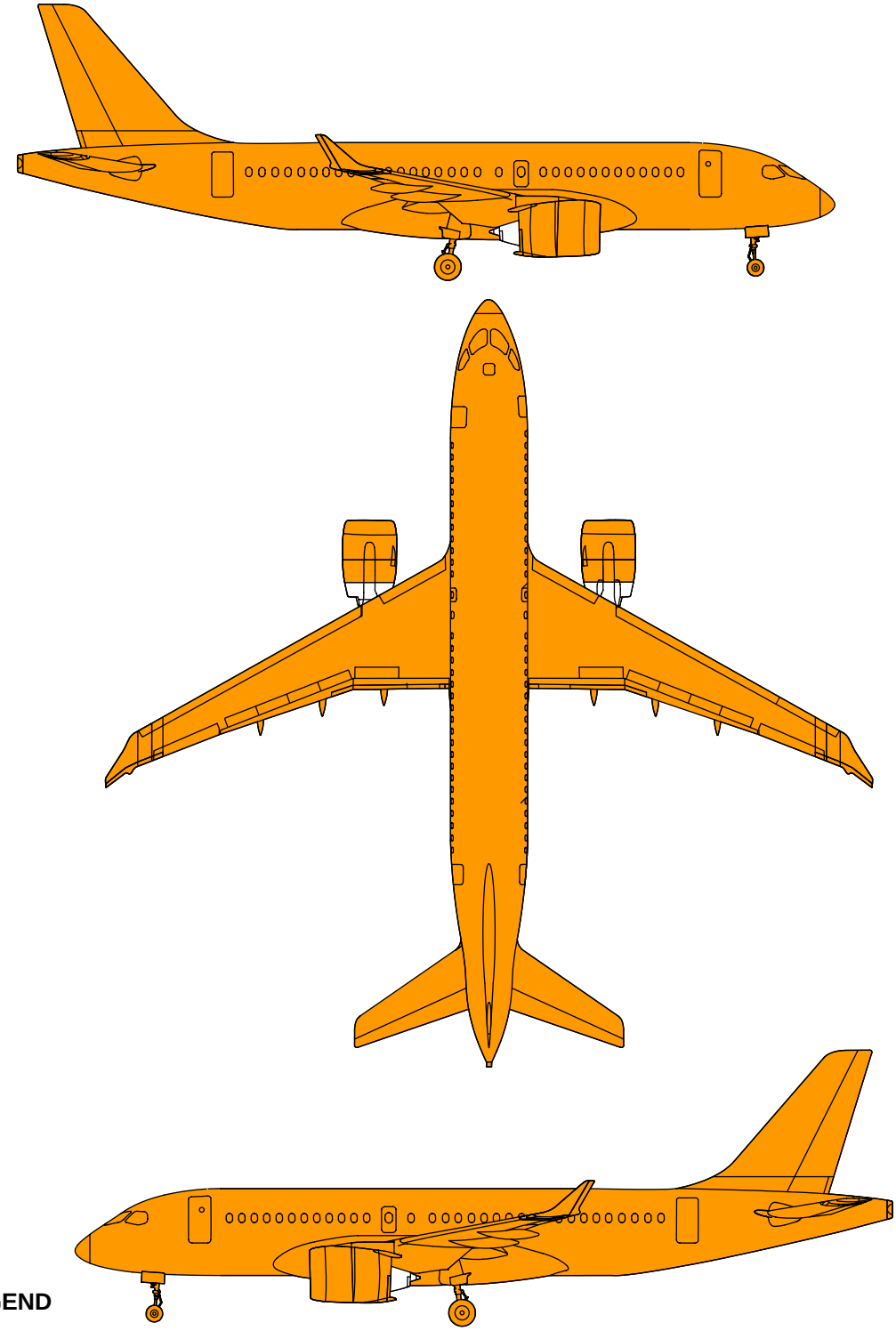

LEGEND

Deicing Fluid Application Areas.

Deicing Fluid Non-Application Areas.

ICN-BD500-A-J123100-C-3AB48-58710-A-001-01

Figure 8 Deicing/Anti- icing fluids application and non-application areas - (Sheet 1 of 2)

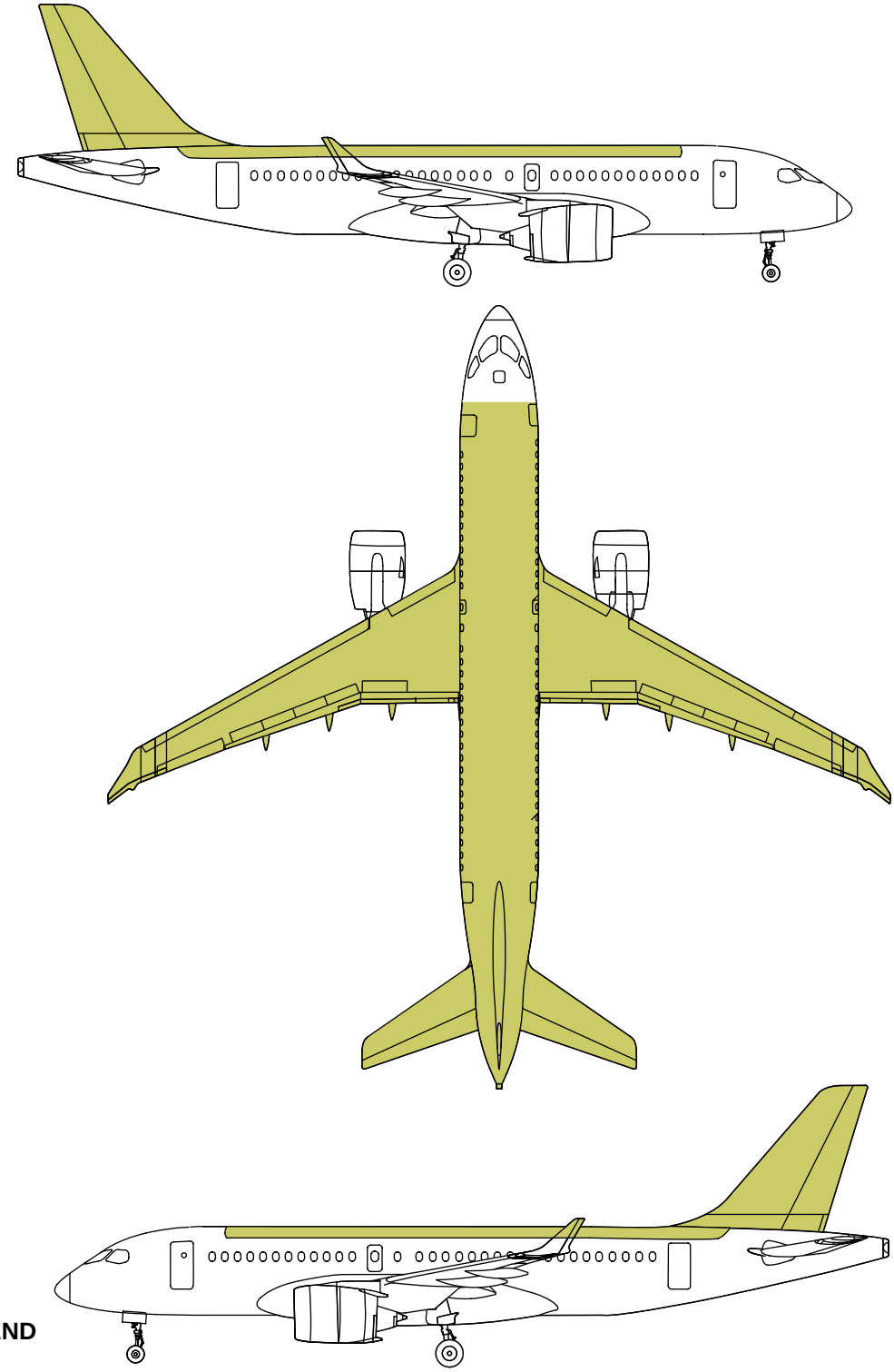

LEGEND

Anti-icing Fluid Application Areas.

Anti-icing Fluid Non-Application Areas.

ICN-BD500-A-J123100-C-3AB48-58711-A-001-01

Figure 8 Deicing/Anti- icing fluids application and non-application areas - (Sheet 2 of 2)

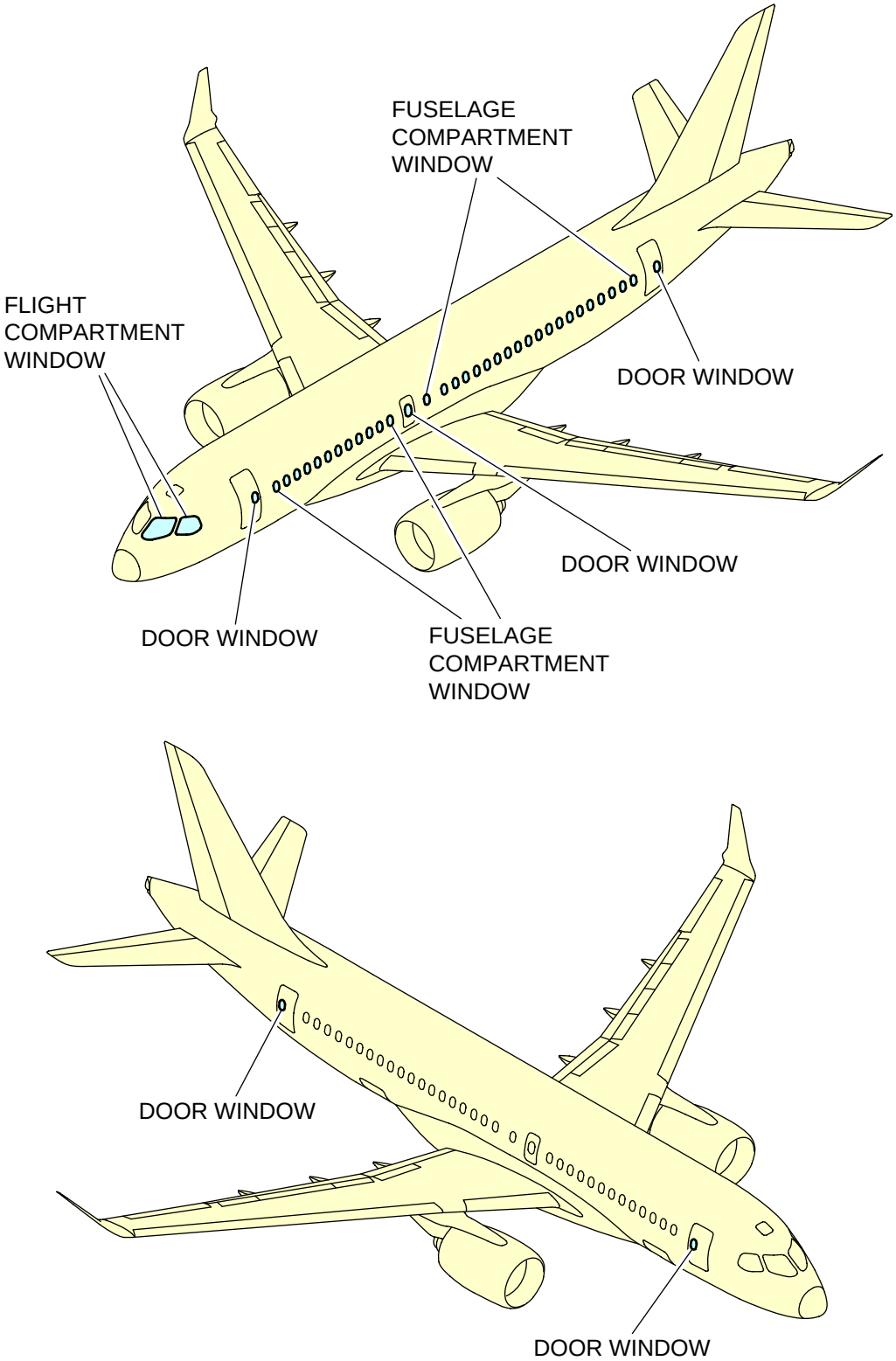

ICN-BD500-A-J560000-C-3AB48-18090-A-001-01

Figure 9 Deicing fluids non-application areas

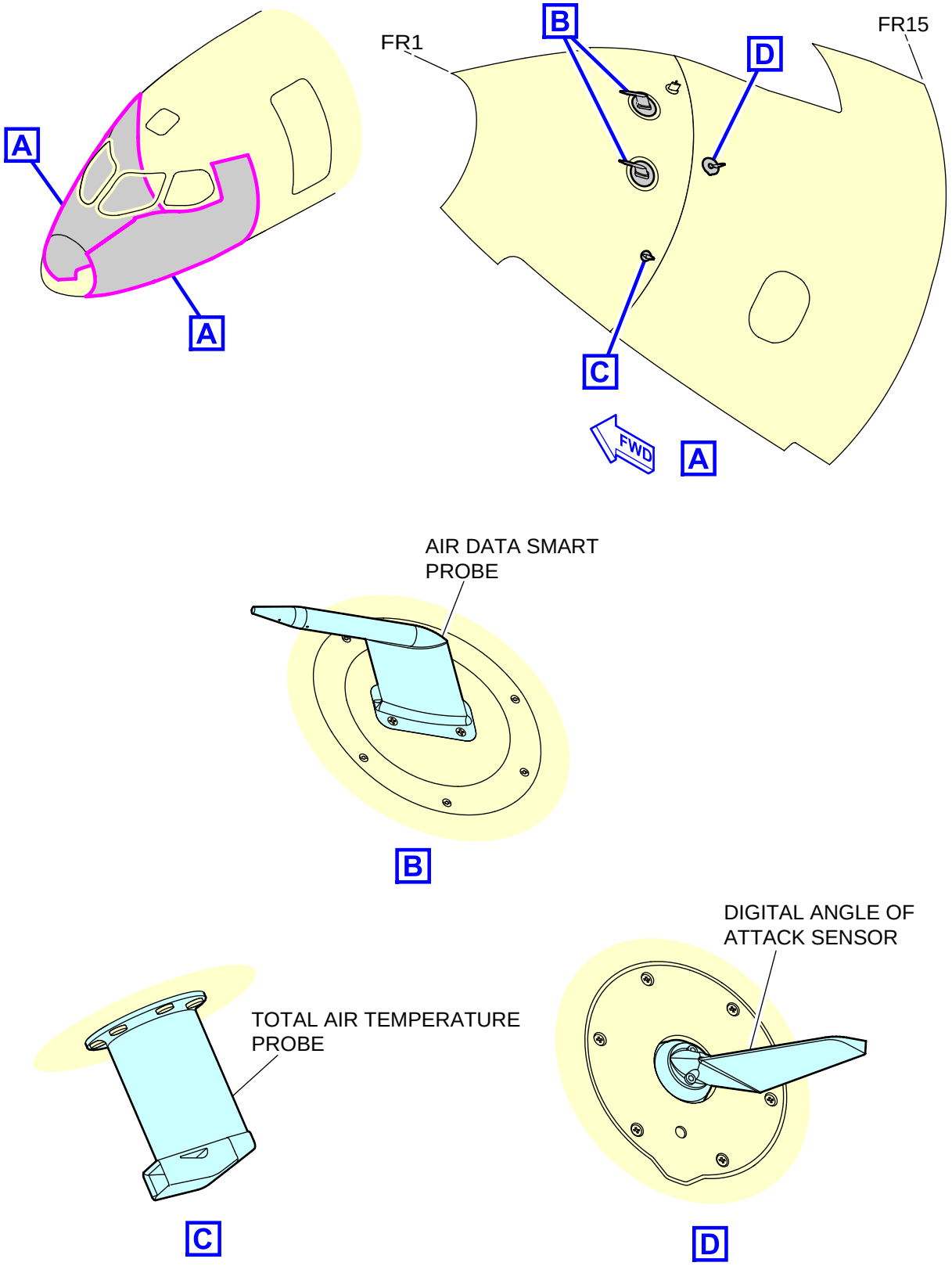

ICN-BD500-A-J123100-C-3AB48-58605-A-001-01

Figure 10 Deicing fluids non-application areas - (Sheet 1 of 7)

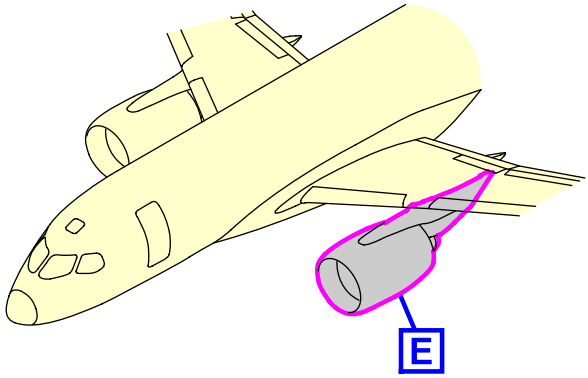

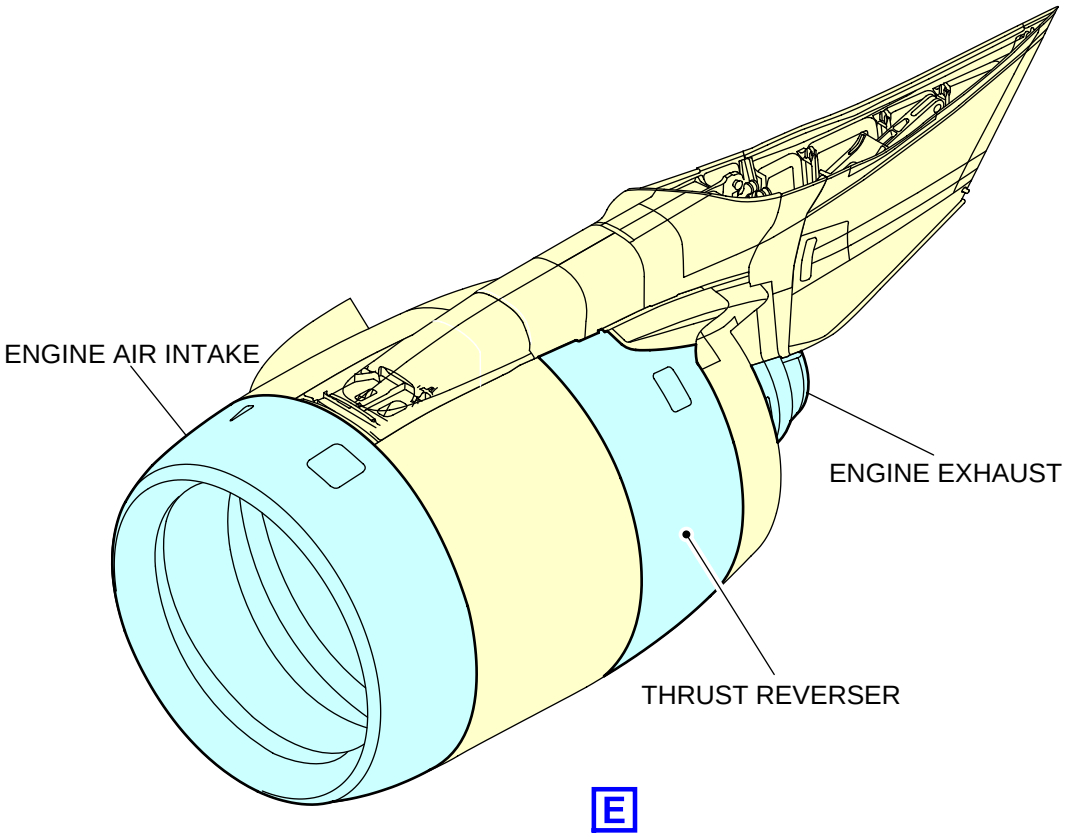

ICN-BD500-A-J123100-C-3AB48-58606-A-001-01

Figure 10 Deicing fluids non-application areas - (Sheet 2 of 7)

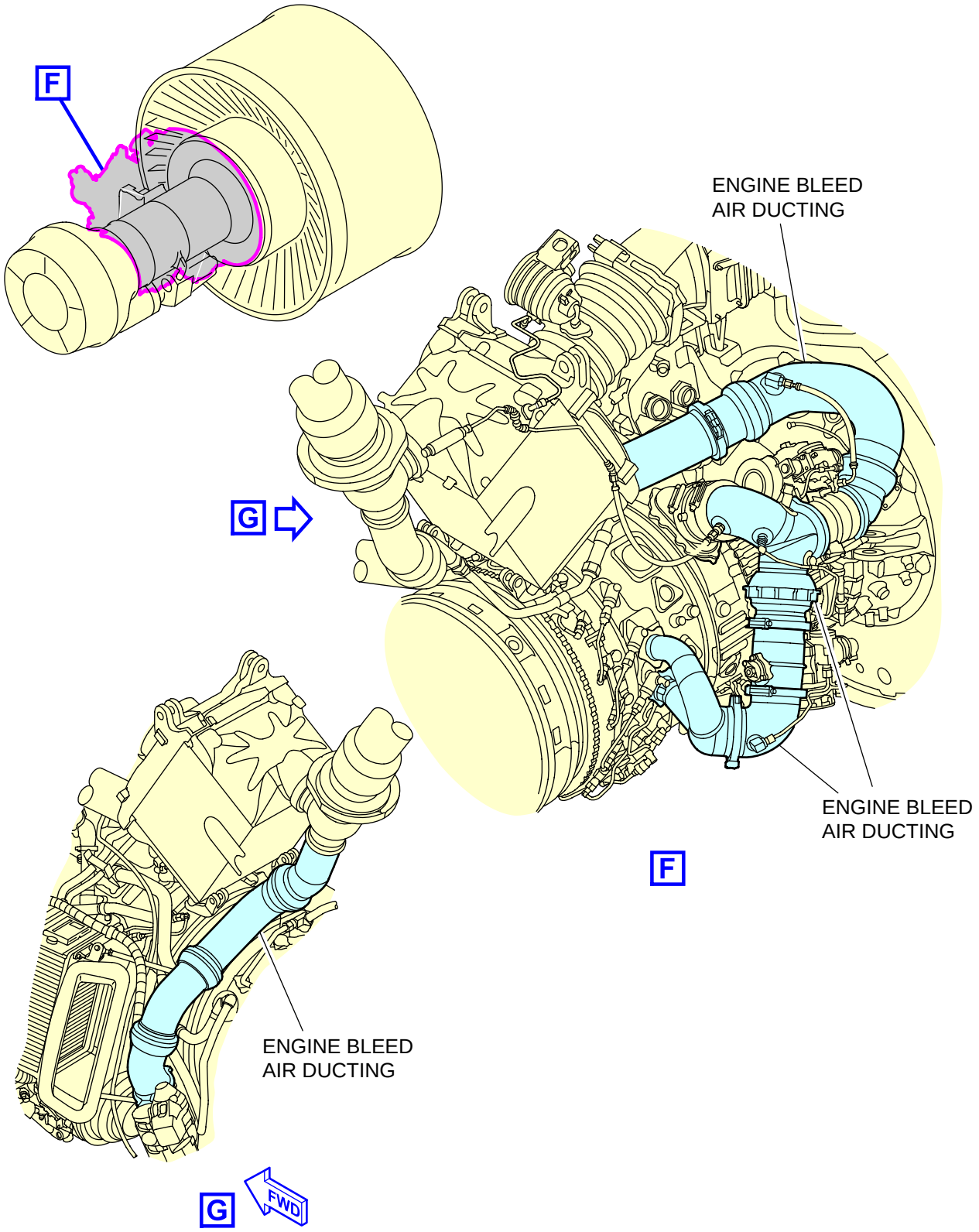

ICN-BD500-A-J123100-C-3AB48-58607-A-001-01

Figure 10 Deicing fluids non-application areas - (Sheet 3 of 7)

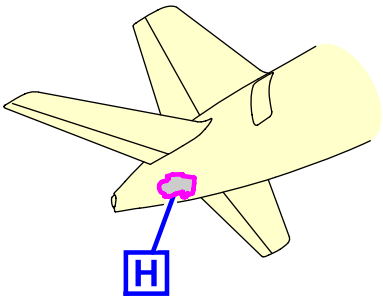

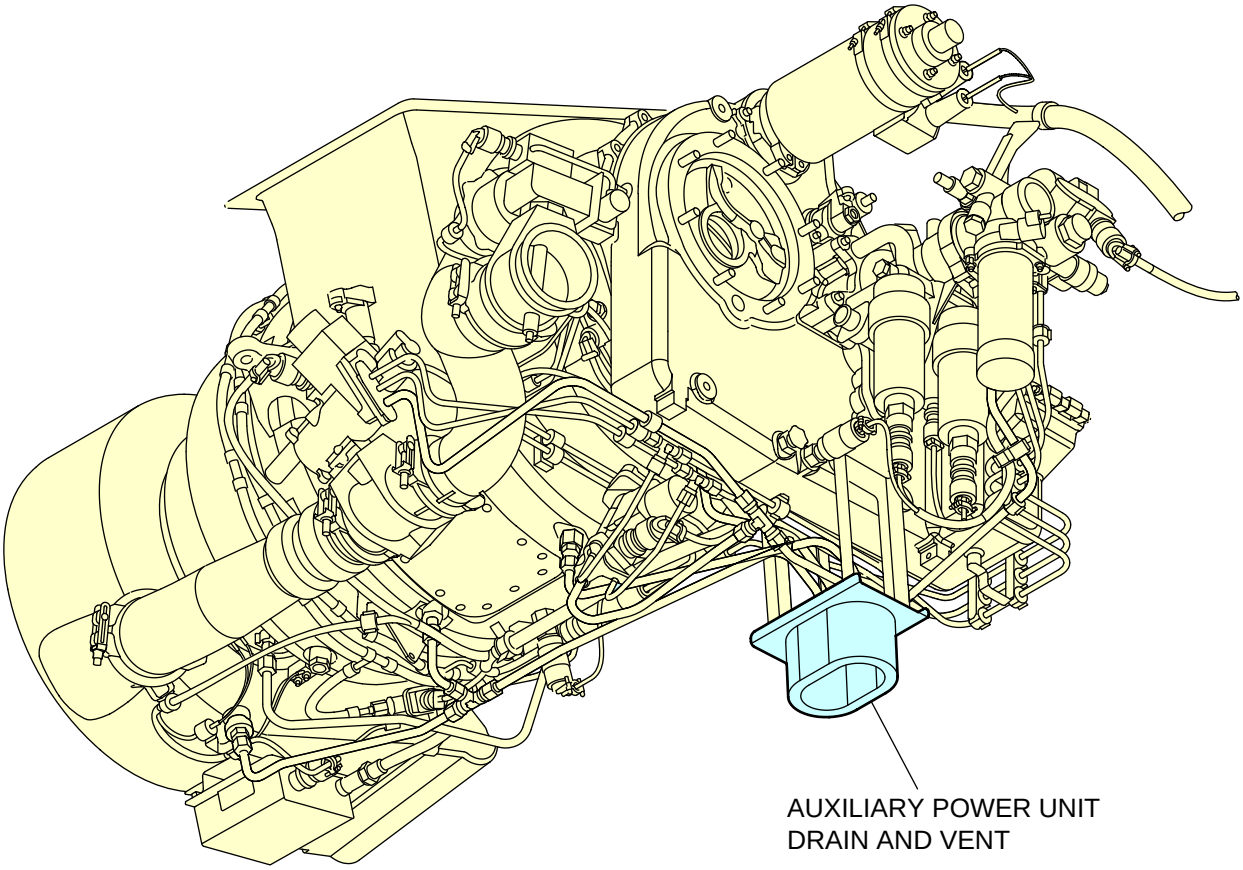

H

ICN-BD500-A-J123100-C-3AB48-58608-A-001-01

Figure 10 Deicing fluids non-application areas - (Sheet 4 of 7)

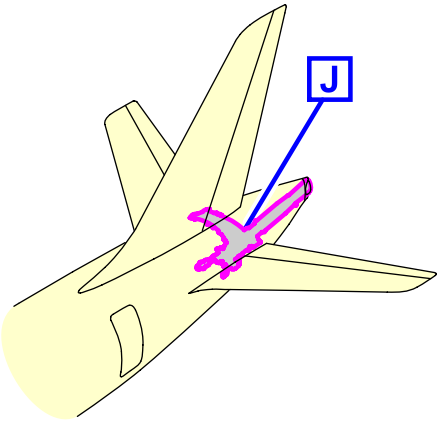

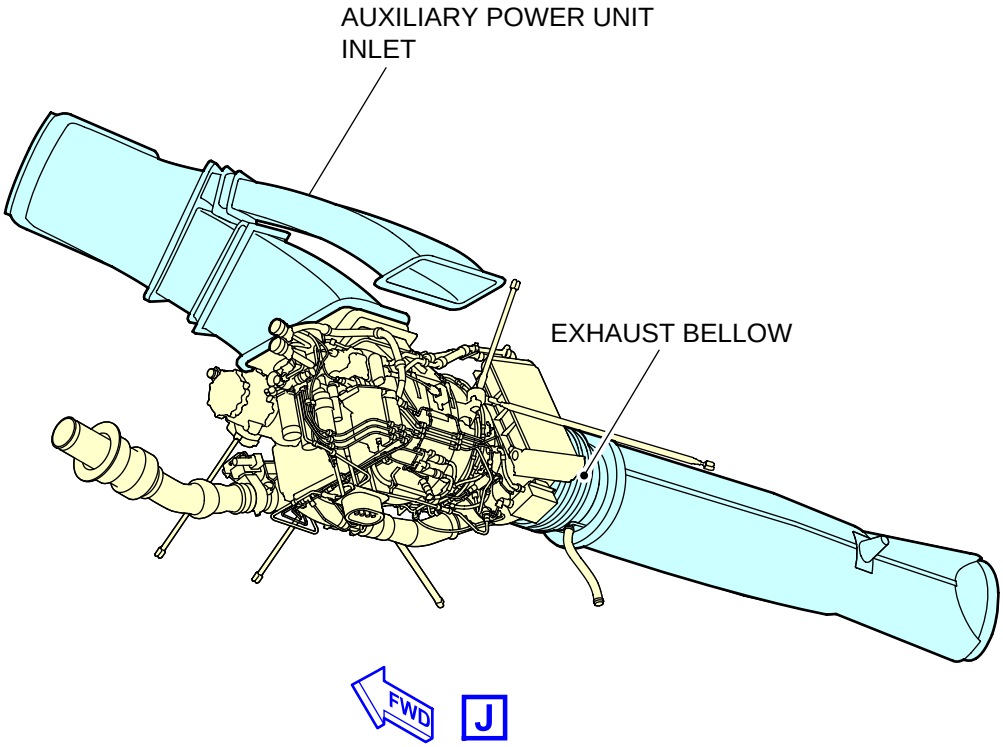

ICN-BD500-A-J123100-C-3AB48-58609-A-001-01

Figure 10 Deicing fluids non-application areas - (Sheet 5 of 7)

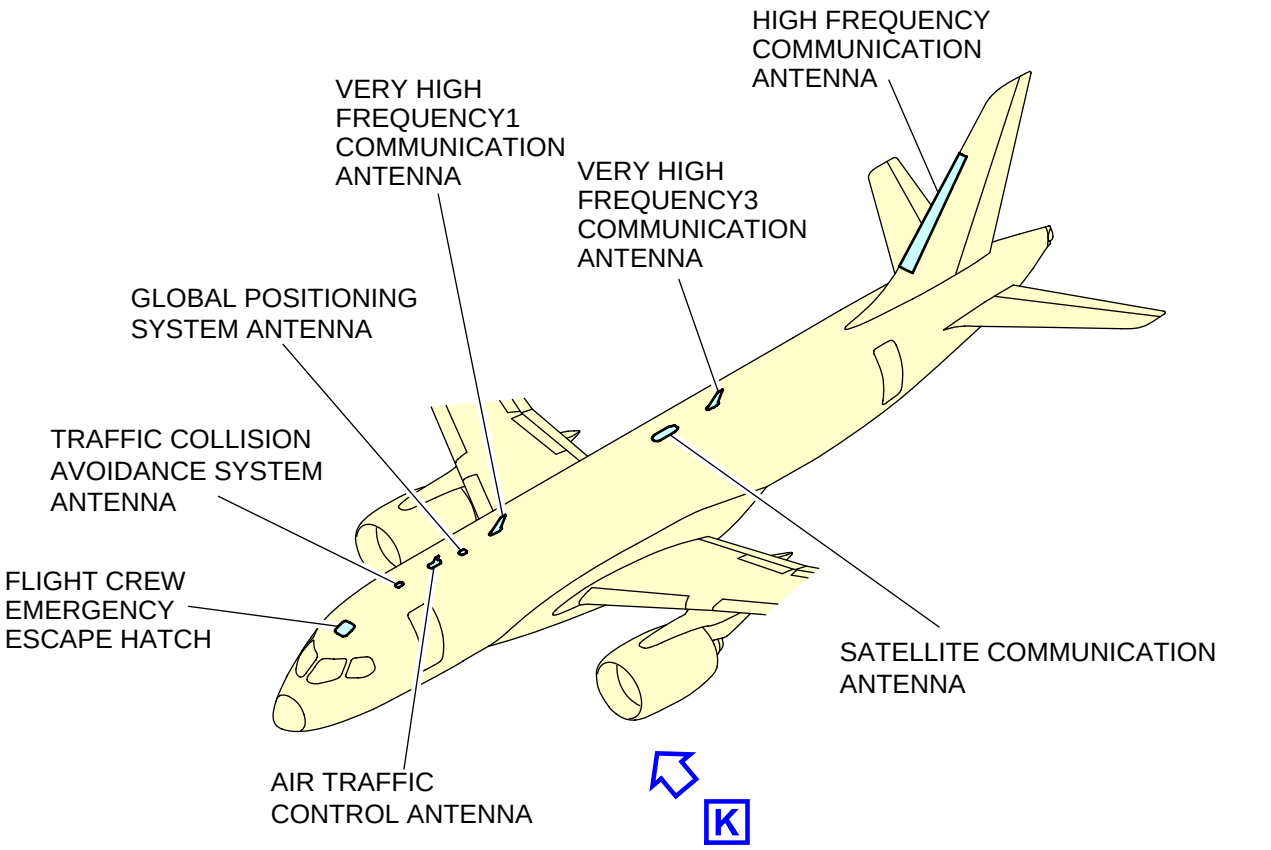

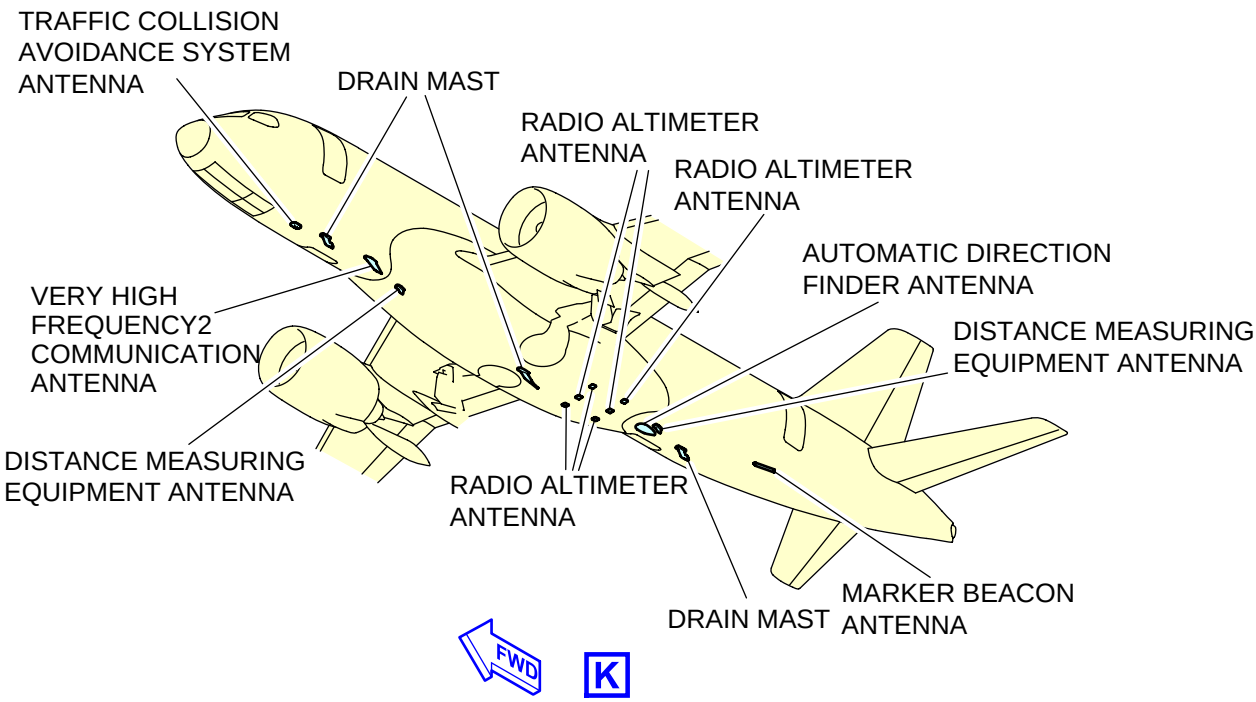

ICN-BD500-A-J123100-C-3AB48-58610-A-002-01

Figure 10 Deicing fluids non-application areas - (Sheet 6 of 7)

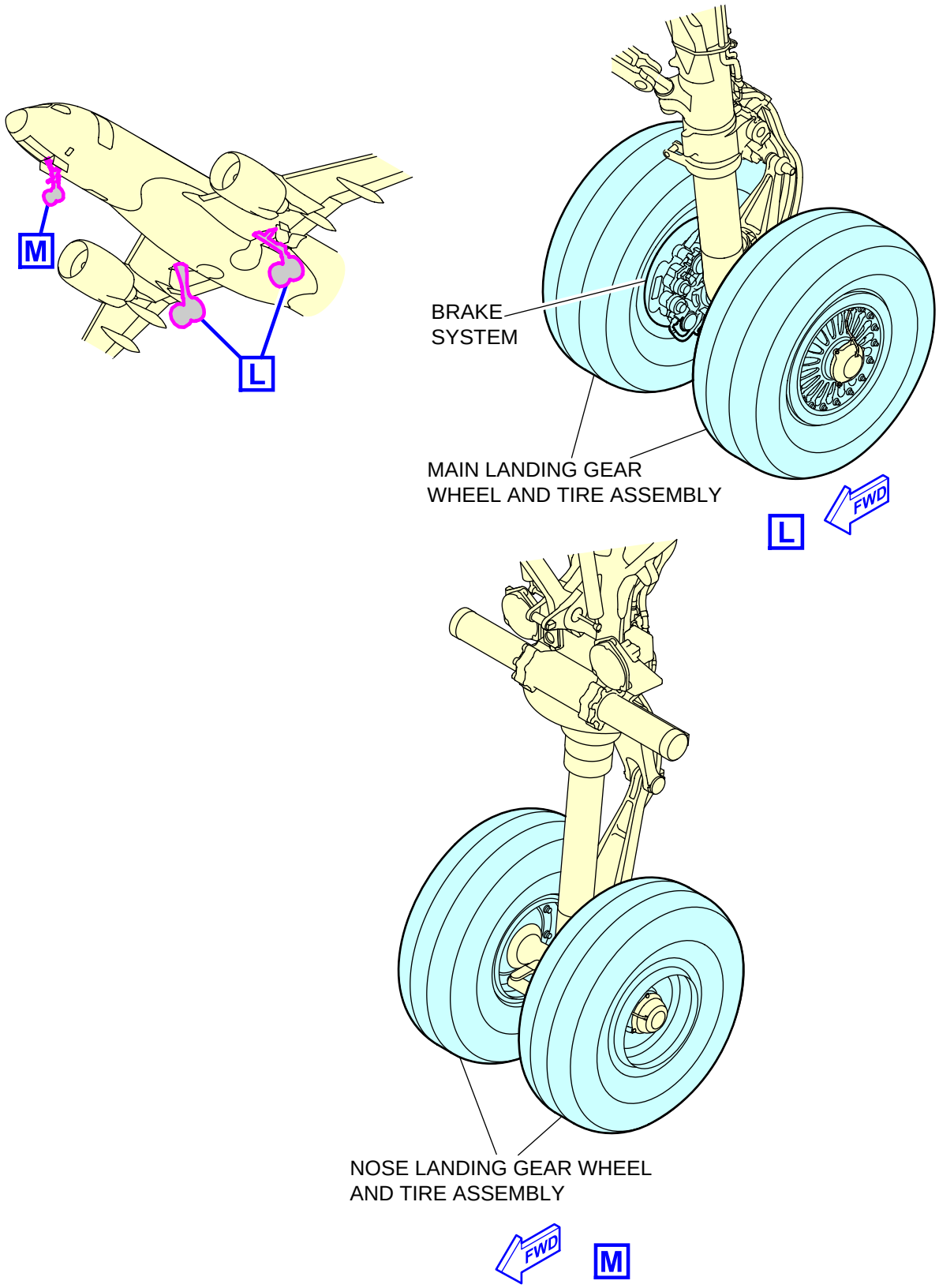

ICN-BD500-A-J123100-C-3AB48-58611-A-001-01

Figure 10 Deicing fluids non-application areas - (Sheet 7 of 7)

Requirements after job completion

Required conditions

Table 17 Required conditions

Action/Condition	Data Module/Technical publication
None	

Intentionally left blank

Aircraft grounding - General maintenance procedure

Applicability: 50001-54999, 55001-59999

Table of contents

Page

Aircraft grounding - General maintenance procedure..... 1
References..... 1
Common information..... 1
Preliminary requirements..... 1
Procedure..... 3
Requirements after job completion..... 5

List of tables

Page

1 References..... 1
2 Required conditions..... 2
3 Support equipment..... 2
4 Consumables, materials, and expendables..... 2
5 Spares..... 2
6 Required conditions..... 5

List of figures

Page

1 Landing gears grounding points..... 4

References

Table 1 References

Data Module/Technical Publication	Title
BD500-A-J24-00-00-01AAA-913G-A	Electrical/Electronic safety precautions - General maintenance safety procedure
BD500-A-J24-00-00-02AAA-913G-A	Electrostatic discharge safety precautions - General maintenance safety procedure

Common information

This data module gives the procedure to ground the aircraft. The grounding points are located on the landing gears.

Preliminary requirements

Production maintenance data

Zones	711	Nose landing gear
	731	Main landing gear, left side
	741	Main landing gear, right side

Required conditions

Table 2 Required conditions

Action/Condition	Data Module/Technical publication
Obey all the electrical/electronic safety precautions.	BD500-A-J24-00-00-01AAA-913G-A
Obey all the electrostatic discharge safety precautions.	BD500-A-J24-00-00-02AAA-913G-A

Support equipment

Table 3 Support equipment

Name	Identification/Reference	Quantity	Remark
None			

Consumables, materials, and expendables

Table 4 Consumables, materials, and expendables

Name	Identification/Reference	Quantity	Remark
None			

Spares

Table 5 Spares

Name	Identification/Reference	Quantity	Remark
None			

Safety conditions

None

Procedure

WARNINGS

- **When the aircraft is parked for maintenance or during bad weather, make sure that it is grounded. Static electrical charges in the aircraft can cause injury to persons and/or damage to equipment.**

  It is not mandatory to ground the aircraft if you do not do maintenance, there is no bad weather and the tires are in direct contact with the ground. Some airports can apply non-conductive coating on the ramp, which can prevent release of the static charges to the ground. In such conditions, you must ground the aircraft.

- **Ground the aircraft before you connect the external electrical power. If you do not do this, you can cause injuries to persons and/or damage the equipment.**

1 To ground the aircraft do as follows:

Refer to Fig. 1 .

1.1 Attach the alligator clamp to one of the grounding points located on the Nose Landing Gear (NLG) or the Main Landing Gear (MLG).

1.2 Attach the other end of the wire to a ground point off of the aircraft.

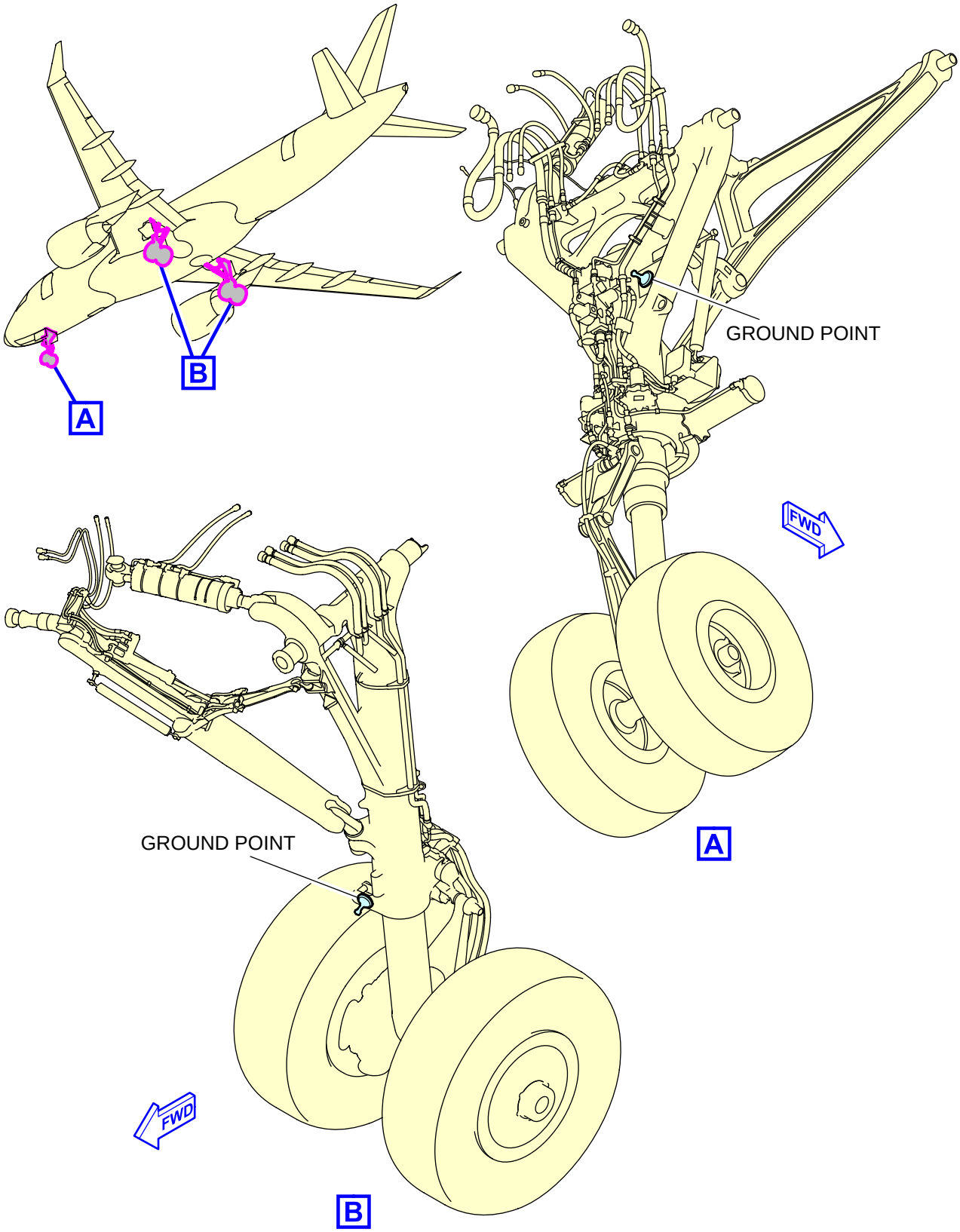

ICN-BD500-A-J000000-A-3AB48-22049-A-002-01

Figure 1 Landing gears grounding points

Requirements after job completion

Required conditions

Table 6 Required conditions

Action/Condition	Data Module/Technical publication
None	

Intentionally left blank

Landing Gear System (LGS) - Description of how it is made and its function

Applicability: 50001-54999, 55001-59999

Table of contents

Page

Landing Gear System (LGS) - Description of how it is made and its function..... 1
References..... 1
Description..... 1
1 General description..... 1

List of tables

Page

1 References..... 1

List of figures

Page

1 Main Landing Gear (MLG)..... 3
2 Nose Landing Gear (NLG)..... 4
3 Landing gear and brakes control panel..... 5
4 Landing Gear and Steering Control Units (LGSCUs)..... 6
5 Landing gear system – Indications..... 7

References

Table 1 References

Data Module/Technical Publication	Title
None	

Description

1 General description

Refer to Fig. 1 thru Fig. 5 .

Note

The information in this data module is for reference only and must not be used for maintenance or flight crew purposes.

Landing Gear System (LGS)

The LGS is used for taxi, takeoff, and landing operations of the aircraft. The landing gear system includes two main landing gear assemblies and one nose landing gear assembly, which also support the weight of the aircraft on the ground.

Proximity sensors are used to monitor the position and condition of the LGS components. The proximity sensors are monitored by the Onboard Maintenance System (OMS). LGS information from the Landing Gear Steering Control Unit (LGSCU)s is shown on the Engine Indication and Crew Alerting System (EICAS) page and the STATUS synoptic page.

The landing gear assemblies are extended and retracted by hydraulic actuators that use hydraulic pressure from system No. 1, and can also use hydraulic pressure from hydraulic system No. 2.

The normal extension and retraction of the landing gear assemblies are controlled by the landing gear and brakes control panel and two LGSCUs. An alternative extension system provides free-fall extension of the landing gear, without hydraulic pressure, when there is a failure of the normal extension system.

When the landing gear lever on the landing gear and brakes control panel is set to the UP position, the LGSCUs transmit a signal to hydraulic system No. 1 to pressurize the unlock actuators and retract actuators.

When the landing gear lever on the landing gear panel is set to the DN position, the LGSCUs transmit a signal to hydraulic system No. 1 to pressurize the hydraulic lines of the landing gear assemblies to retract them.

When the landing gear assemblies are fully retracted, three Black icons, with a White UP indication, will show below the GEAR indication on the EICAS page. The main landing gear retracts inboard. The nose landing gear retracts forward.

When the landing gear assemblies are fully extended, three Green icons, with a Black DN indication, will show below the GEAR indication on the EICAS page.

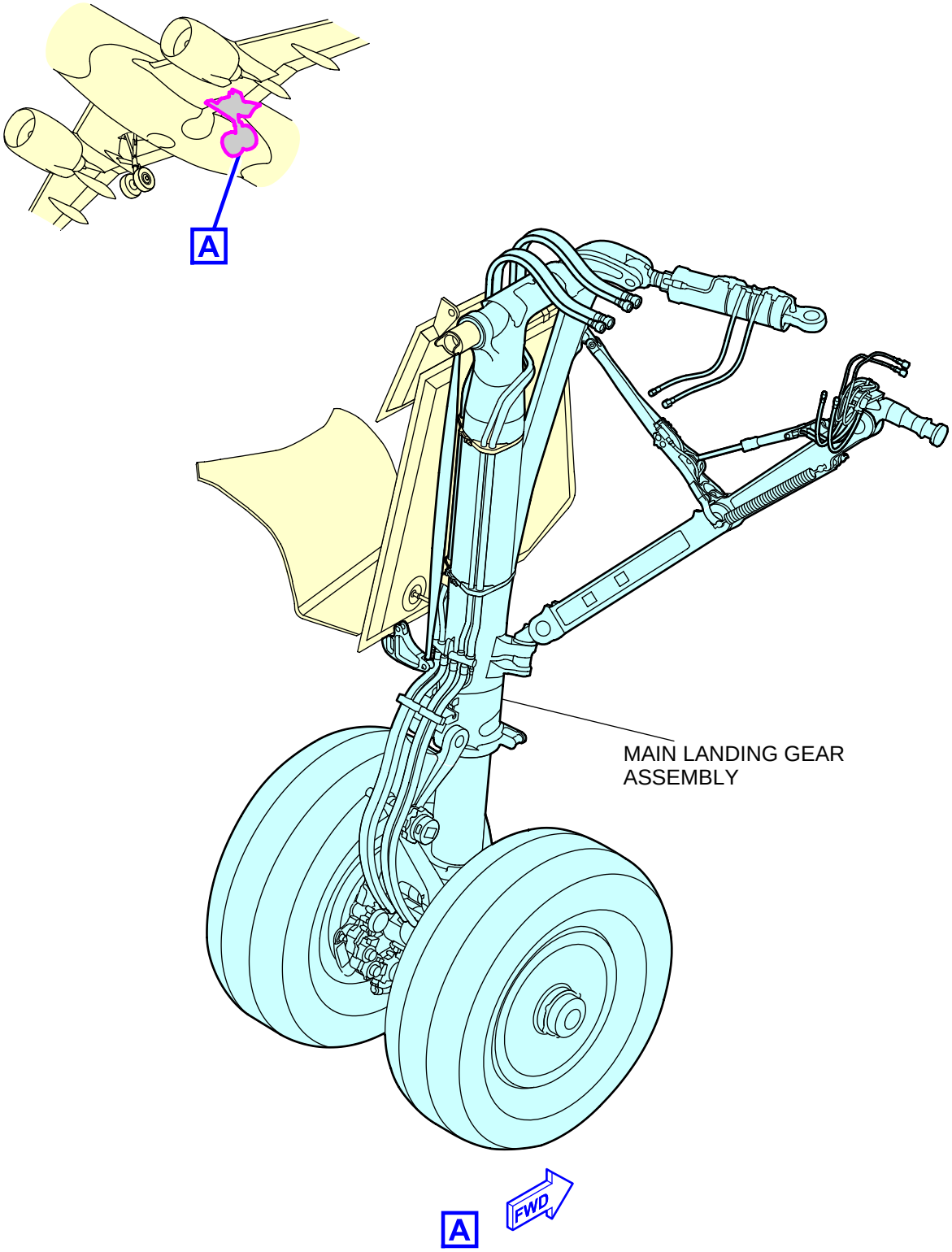

ICN-BD500-A-J320000-A-3AB48-65884-A-001-01

Figure 1 Main Landing Gear (MLG)

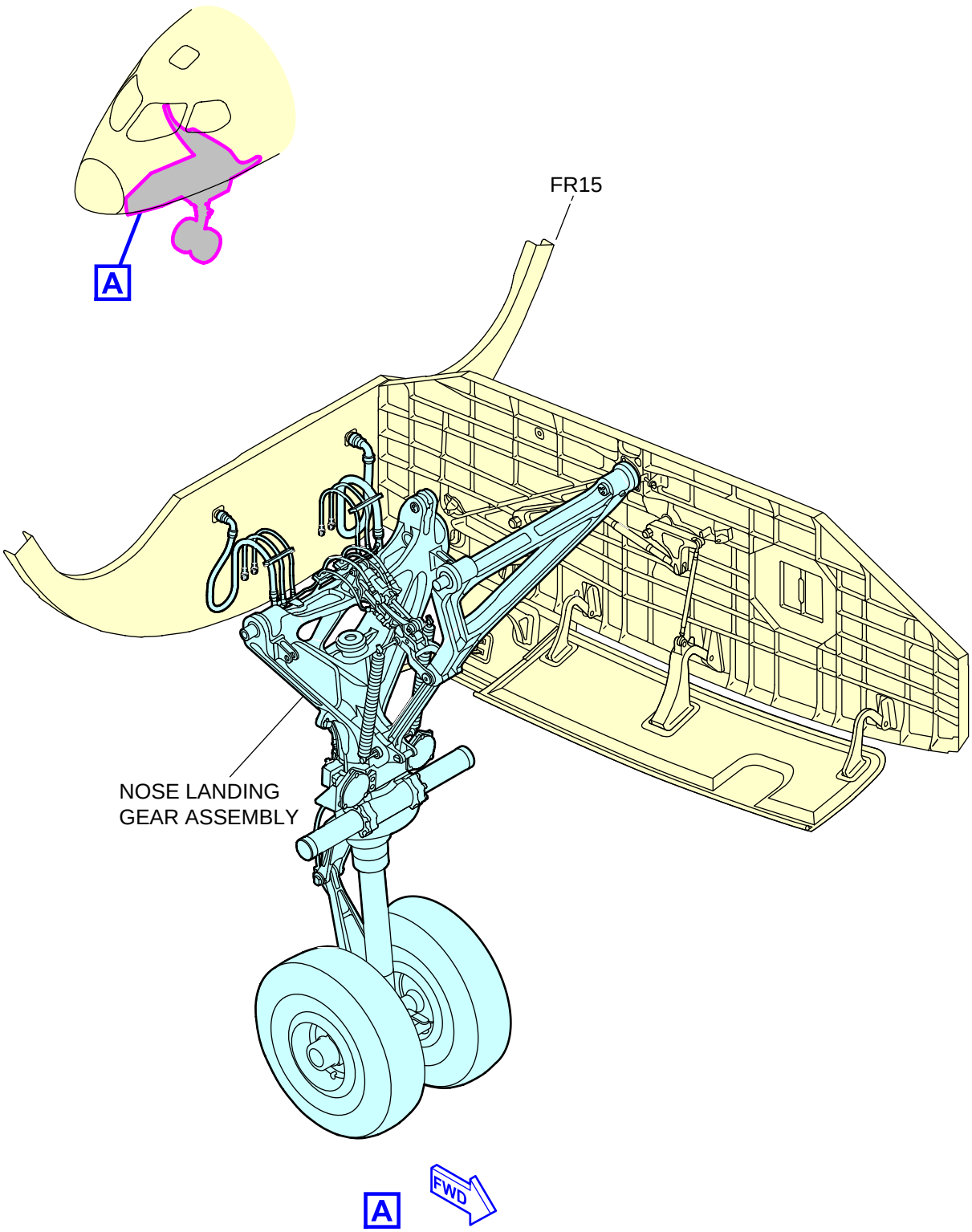

ICN-BD500-A-J320000-A-3AB48-65885-A-001-01

Figure 2 Nose Landing Gear (NLG)

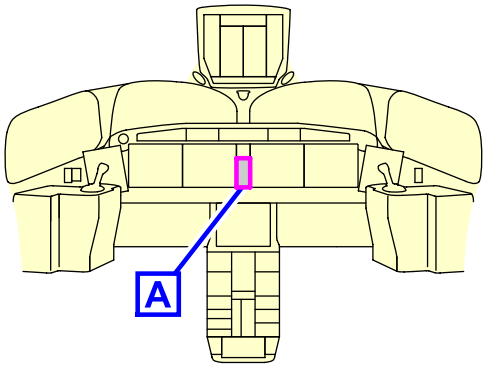

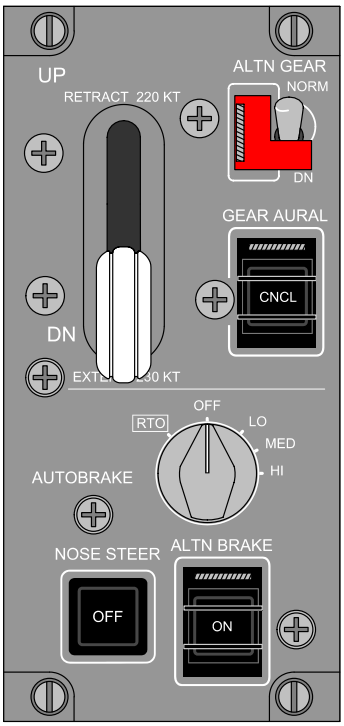

LANDING GEAR AND BRAKES CONTROL PANEL

A

ICN-BD500-A-J320000-C-3AB48-06935-A-004-01

Figure 3 Landing gear and brakes control panel

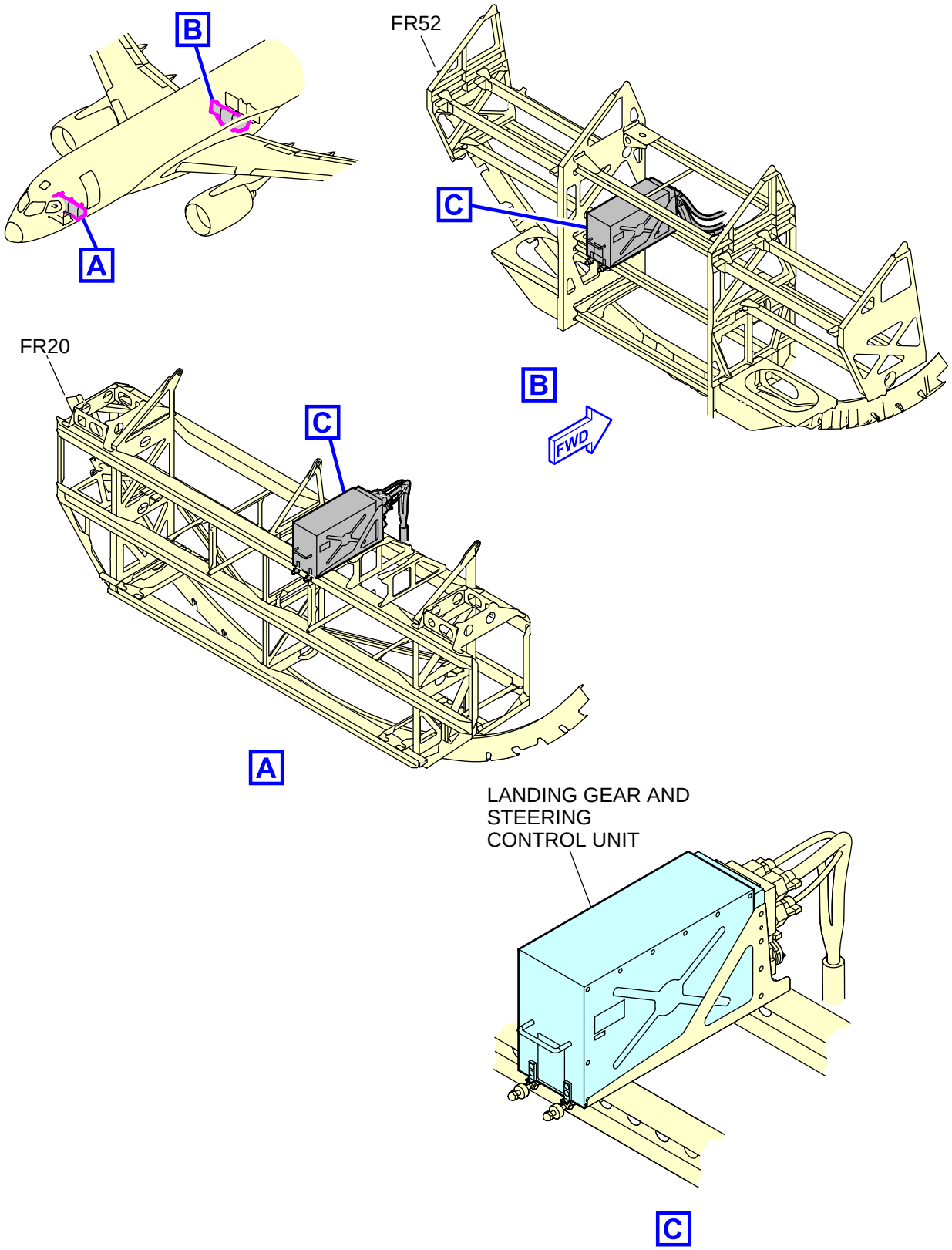

ICN-BD500-A-J320000-A-3AB48-65890-A-001-01

Figure 4 Landing Gear and Steering Control Units (LGSCUs)

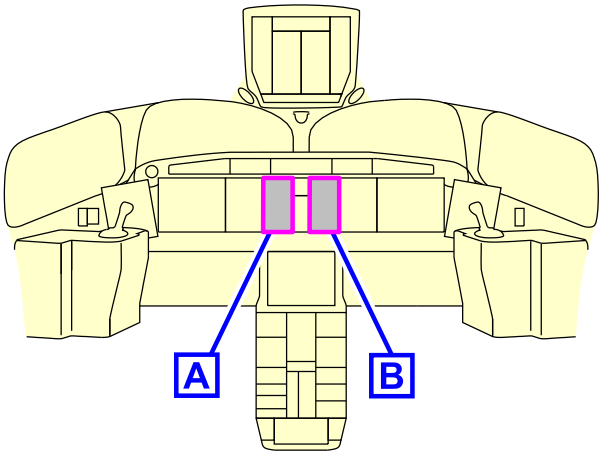

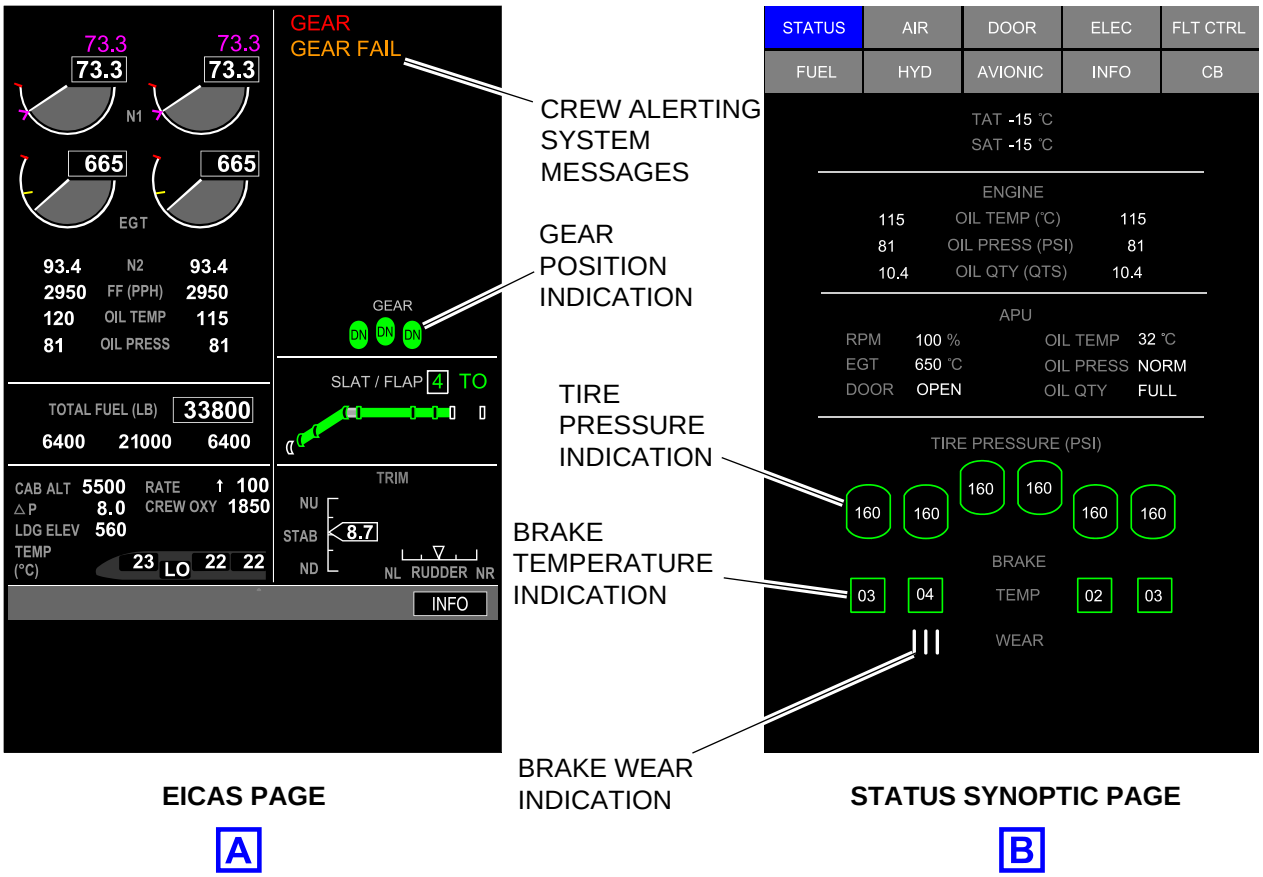

EICAS PAGE

A

STATUS SYNOPTIC PAGE

B

ICN-BD500-A-J320000-A-3AB48-65891-A-001-01

Figure 5 Landing gear system – Indications

Intentionally left blank

A220

Composite repairs - General maintenance procedure

Applicability: 50001-54999, 55001-59999

Table of contents

Page

Composite repairs - General maintenance procedure..... 1
References..... 1
Common information..... 1
Preliminary requirements..... 2
Procedure..... 2
Requirements after job completion..... 5

List of tables

Page

1 References..... 1
2 Required conditions..... 2
3 Support equipment..... 2
4 Consumables, materials, and expendables..... 2
5 Spares..... 2
6 Required conditions..... 5

List of figures

Page

1 Composite structure..... 4

References

Table 1 References

Data Module/Technical Publication	Title
BD500-A-J51-00-16-00AAA-006A-A	Structures glossary - List of terms
BD500-A-J51-73-01-01AAA-663A-A	Composite repair, light repairs with resin - Standard repair procedure
BD500-A-J51-73-01-02AAA-663A-A	Composite repair, solid laminate - Standard repair procedure
BD500-A-J51-73-01-03AAA-663A-A	Composite repair, honeycomb sandwich structure - Standard repair procedure

Common information

This data module gives the data to repair and refinish the structure made with composite materials. Special repairs are included in applicable data modules in this publication.

Preliminary requirements

Required conditions

Table 2 Required conditions

Action/Condition	Data Module/Technical publication
None	

Support equipment

Table 3 Support equipment

Name	Identification/Reference	Quantity	Remark
None			

Consumables, materials, and expendables

Table 4 Consumables, materials, and expendables

Name	Identification/Reference	Quantity	Remark
None			

Spares

Table 5 Spares

Name	Identification/Reference	Quantity	Remark
None			

Safety conditions

None

Procedure

1 General

1.1 Components made of composites are shown in relation to the aircraft. Refer to Fig. 1 .

1.2 For definitions of terms used, refer to BD500-A-J51-00-16-00AAA-006A-A.

CAUTION

Composite structure must be protected from exposure to ultraviolet light and contaminants.

2 Repair procedure

2.1 For light repairs with resin, refer to BD500-A-J51-73-01-01AAA-663A-A.

2.2 For repairs to solid laminate, refer to BD500-A-J51-73-01-02AAA-663A-A.

2.3 For repairs to honeycomb sandwich structure, refer to BD500-A-J51-73-01-03AAA-663A-A.

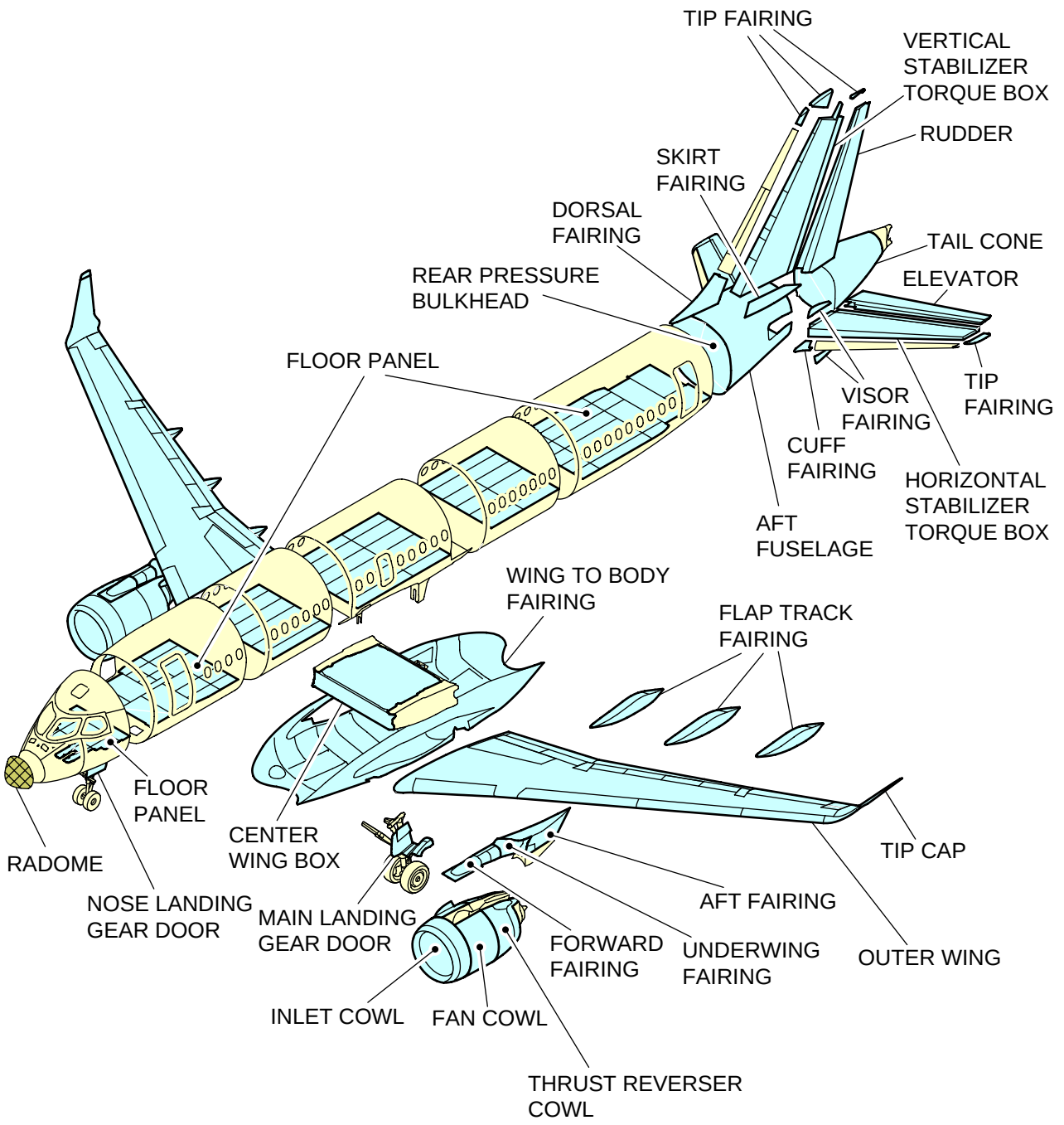

LEGEND

Graphite.

Fibreglass.

ICN-BD500-A-J517301-C-3AB48-25189-A-002-01

Figure 1 Composite structure

Requirements after job completion

Required conditions

Table 6 Required conditions

Action/Condition	Data Module/Technical publication
None	

Intentionally left blank

Tethering and shoring

Applicable to: All

Intentionally left blank

Stabilizing the aircraft - Stabilizing

Applicability: 50001-54999, 55001-59999

Table of contents

Page

Stabilizing the aircraft - Stabilizing..... 1
References..... 1
Common information..... 1
Preliminary requirements..... 2
Procedure..... 3
Requirements after job completion..... 7

List of tables

Page

1 References..... 1
2 Required conditions..... 2
3 Support equipment..... 2
4 Consumables, materials, and expendables..... 2
5 Spares..... 2
6 Required conditions..... 7

List of figures

Page

1 Stabilizing the aircraft - Stabilizing..... 5
2 Stabilizing the aircraft - Stabilizing..... 6

References

Table 1 References

Data Module/Technical Publication	Title
BD500-A-J07-40-00-00AAA-028A-A	Site survey - General
BD500-A-J07-40-00-01AAA-028A-A	Weight and center of gravity management - General
BD500-A-J32-21-00-01AAA-720A-A	Nose Landing Gear (NLG) lock pin - Install procedure
BD500-A-J32-11-00-01AAA-720A-A	Main Landing Gear (MLG) lock pin - Install procedure
BD500-A-J12-20-32-02AAA-200B-A	Main landing gear shock strut (nitrogen/oil) - Servicing
BD500-A-J27-63-00-01AAA-913A-A	Ground spoilers deployment - General maintenance procedure

Common information

This data module gives the procedure to stabilize the damaged aircraft.

Preliminary requirements

Required conditions

Table 2 Required conditions

Action/Condition	Data Module/Technical publication
Make sure that the aircraft is officially released by the investigative authorities for the recovery operations.	
Obey the general health and safety precautions.	BD500-A-J07-40-00-00AAA-028A-A
Make sure that the aircraft's weight and center of gravity are managed before stabilizing the aircraft.	BD500-A-J07-40-00-01AAA-028A-A

Support equipment

Table 3 Support equipment

Name	Identification/Reference	Quantity	Remark
None			

Consumables, materials, and expendables

Table 4 Consumables, materials, and expendables

Name	Identification/Reference	Quantity	Remark
Marker, metal tip, black	P05-409	1	

Spares

Table 5 Spares

Name	Identification/Reference	Quantity	Remark
None			

Safety conditions

Note

During the aircraft recovery operation, all the precautionary steps must be taken to avoid the injury and danger for involved personnel's.

Note

This task should be performed before the weight reduction and the lifting/levelling operations.

Procedure

1 Stabilize the damaged aircraft as follows:

Refer to Fig. 1 .

Refer to Fig. 2 .

WARNING

Make sure that all applicable warning signs and placards are installed in the flight compartment to tell persons not to operate the flight controls. Accidental movement of the flight control components can cause injury to persons and/or damage to equipment.

1.1 Make sure the aircraft is correctly grounded to prevent undesired movement during the operation.

1.2 Make sure that the wind speed is not more than 52 knots.

1.3 Make sure that the soil around the aircraft is stable which let the ground equipment vehicles come near to the aircraft.

1.4 Install tethers based on the aircraft stability for wind speed.

1.5 Stable the aircraft by shoring with the timbers. Use timbers in combination with tethers if necessary.

1.6 Calculate the Net Recoverable Weight (NRW) and Center of Gravity (CG) position.

1.7 Mark the CG location on the fuselage with marker (P05-409) . Refer this location in future, when you add or remove any weight.

1.8 Install the landing gear downlock pins when one of the landing gear is extended.

- If Nose Landing Gear (NLG) is extended, Refer BD500-A-J32-21-00-01AAA-720A-A.

- If Main Landing Gear (MLG) is extended, Refer BD500-A-J32-11-00-01AAA-720A-A.

1.9 Move the fuel from the low wing to the high wing to balance the weight and leveling/lifting the load from the low wing.

Note

Fuel movement decreases the load on the wing and engine.

1.10 Inflate the landing gear strut of the low wing and deflate the landing gear strut of the high wing which helps to lift the low wing. Refer to BD500-A-J12-20-32-02AAA-200B-A.

1.11 If the power is available in the damaged aircraft, do the operations as follows:

- Engage the spoilers in strong wind condition which helps to stable the aircraft. Refer to BD500-A-J27-63-00-01AAA-913A-A

- Put the horizontal stabilizer to a slightly nose down position.

1.12 Make sure that the aircraft CG position stays minimum 25.59 in. (650 mm) forward from the aircraft balance point (which is the aircraft jack point of the main landing gear).

Note

Other conditions may be necessary based on the specified recovery operation selected.

(Sheet) Applicability: 50001-54999

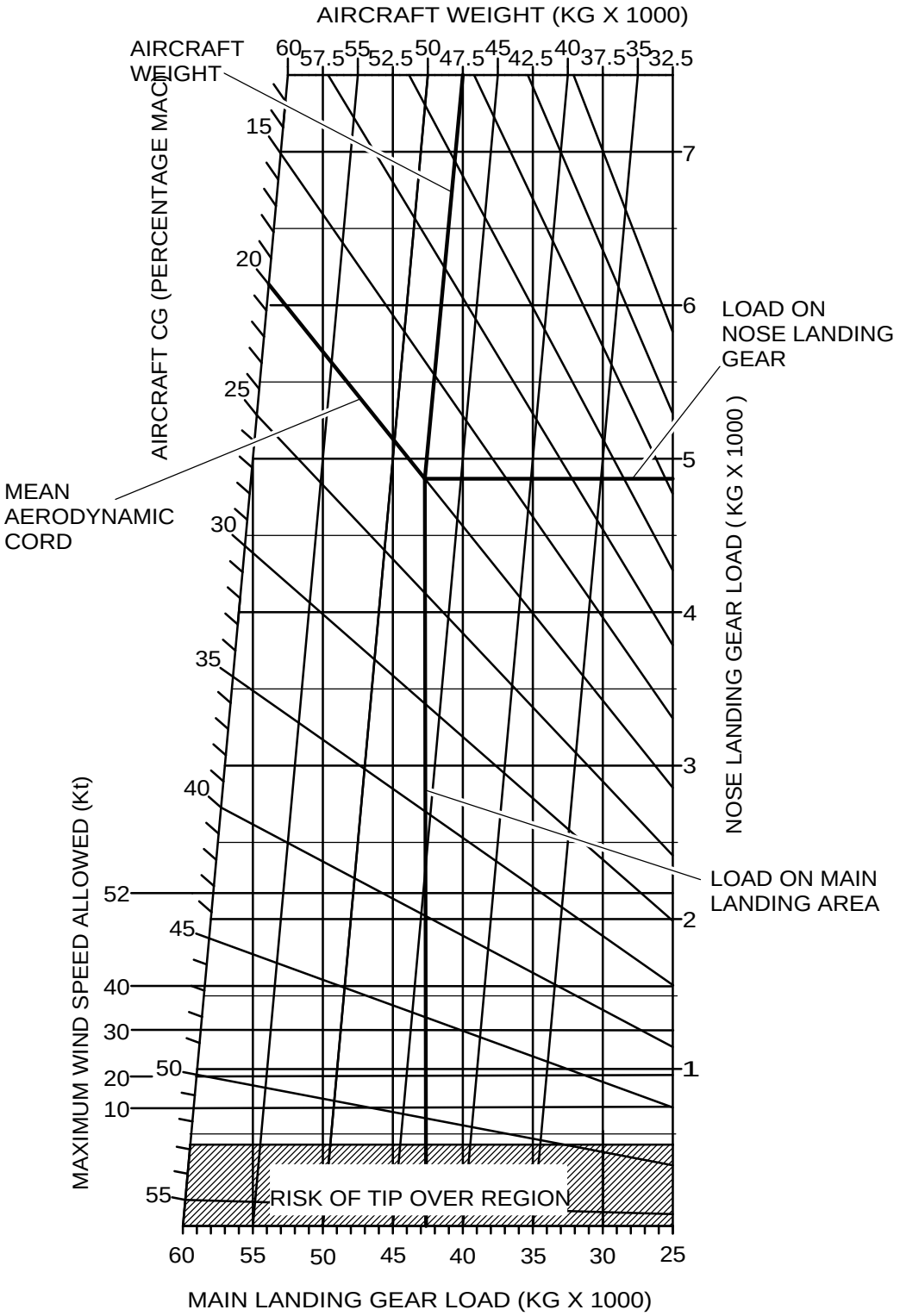

AIRCRAFT STABILITY - WHEELS ON DRY GROUND

ICN-BD500-A-J072000-C-3AB48-43111-A-001-01

Figure 1 Stabilizing the aircraft - Stabilizing

(Sheet) Applicability: 55001-59999

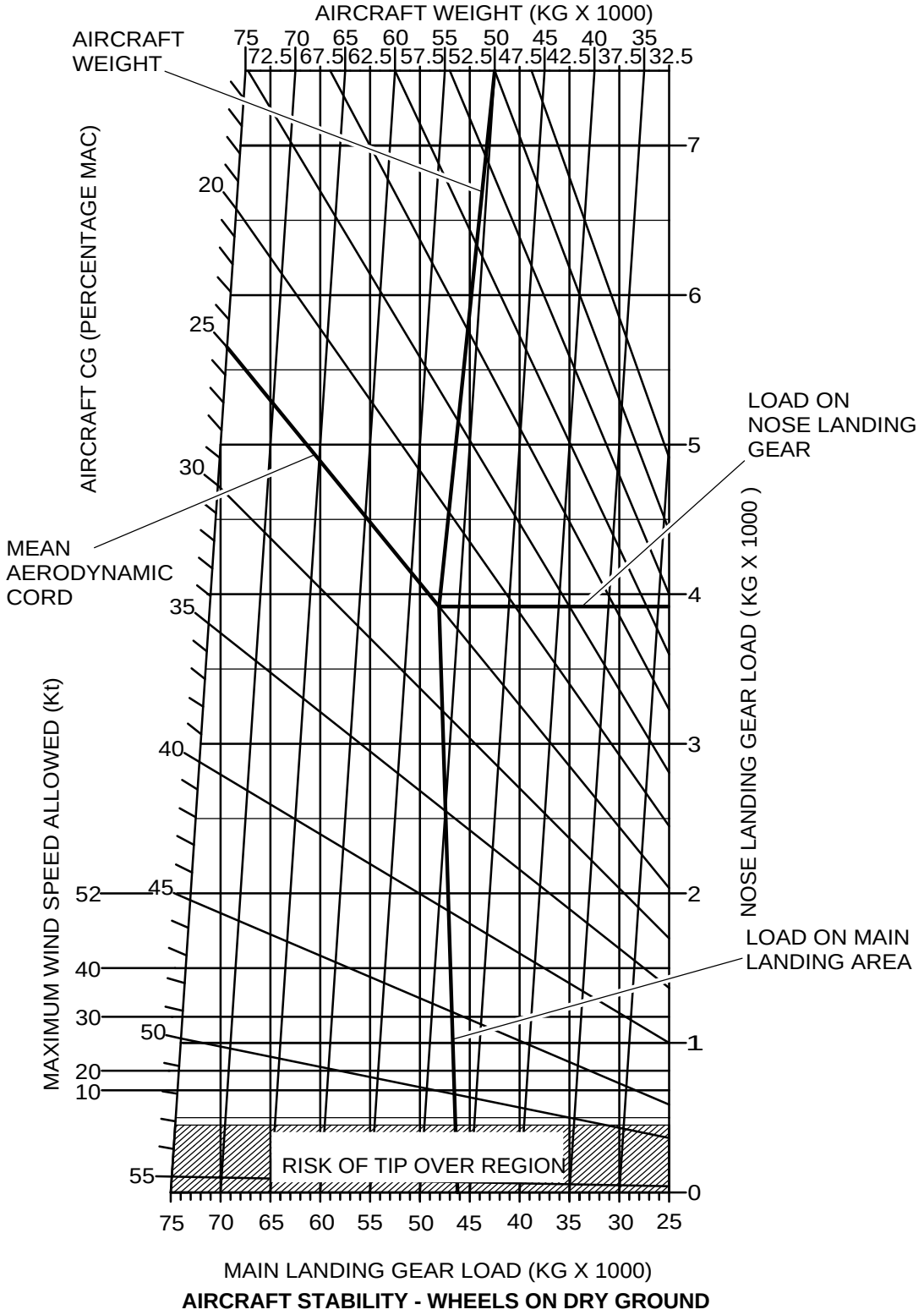

AIRCRAFT STABILITY - WHEELS ON DRY GROUND

ICN-BD500-A-J072000-C-3AB48-43112-A-001-01

Figure 2 Stabilizing the aircraft - Stabilizing

Requirements after job completion

Required conditions

Table 6 Required conditions

Action/Condition	Data Module/Technical publication
None	

Intentionally left blank

Tethering and shoring - General data - Tethering and shoring

Applicability: 50001-54999, 55001-59999

Table of contents

Page

Tethering and shoring - General data - Tethering and shoring..... 1
References..... 1
Common information..... 1
Preliminary requirements..... 1
Procedure..... 2
1 Tethering..... 2
2 Shoring..... 3
Requirements after job completion..... 3

List of tables

Page

1 References..... 1
2 Required conditions..... 1
3 Support equipment..... 2
4 Consumables, materials, and expendables..... 2
5 Spares..... 2
6 Required conditions..... 3

References

Table 1 References

Data Module/Technical Publication	Title
None	

Common information

This data module gives the information on the tethering and the shoring of the aircraft.

Preliminary requirements

Required conditions

Table 2 Required conditions

Action/Condition	Data Module/Technical publication
None	

Support equipment

Table 3 Support equipment

Name	Identification/Reference	Quantity	Remark
None			

Consumables, materials, and expendables

Table 4 Consumables, materials, and expendables

Name	Identification/Reference	Quantity	Remark
None			

Spares

Table 5 Spares

Name	Identification/Reference	Quantity	Remark
None			

Safety conditions

None

Procedure

1 Tethering

In the general recovery procedure in many conditions tethering and shoring are necessary. It will be necessary to examine the necessity and advantages for each recovery step.

During leveling, lifting, and weight reduction operations, careful monitoring is necessary to make sure that the aircraft is stable and uncontrolled movement of the aircraft is prevented.

Tether the aircraft correctly as follows:

- Special attachment fittings provided by Airbus.
- Wooden fixtures to doorways and window cutouts.
- Cables or straps attached to various wing strong points.

Determine the number of tethers based on the information as follows:

- Amount of instability.
- Recovery procedure.
- Wind speed and direction.

Safety the tethers by attaching to the ground anchor. Make sure to install the load tensioning devices. Protect the tethers with the load-measuring equipment, such as scales or dynamometers, to monitor and adjust the loads if necessary. When the aircraft is leveled, lifted, or the centre of gravity moved, adjust the tethers to keep the consistent restraining force.

2 Shoring
Shoring of the aircraft is necessary to make the aircraft stable before the removal of fuel or cargo. You can also use shoring to hold the aircraft while the leveling and lifting equipment is moved. Use a large wood beam to hold the forward or the aft fuselage, or the lower wing surfaces. Put the wood beam in the correct load-bearing areas and correctly pad to prevent the secondary damage. Use heavy felt, rubber sheets, mattresses, sandbags, and rubber tires as the protective padding. Make fuselage supports or cradles to align with the contours of the fuselage frames. Evaluate the shoring load to meet the permitted limits.

Requirements after job completion

Required conditions

Table 6 Required conditions

Action/Condition	Data Module/Technical publication
None	

Intentionally left blank

Use of cranes - Standard support equipment and tools

Applicability: 50001-54999, 55001-59999

Table of contents

Page

Use of cranes - Standard support equipment and tools..... 1
References..... 1
Description..... 1

List of tables

Page

1 References..... 1

References

Table 1 References

Data Module/Technical Publication	Title
BD500-A-J07-50-00-00AAA-811A-A	Prepare a roadway - Preparation for vehicle transportation
BD500-A-J09-20-00-02AAA-170A-A	Moving damaged aircraft with cranes - Handling

Description

General:

Use of large cranes with correctly sized slings is a good method for lifting and moving a damaged aircraft.

A sling assembly contains the cables, hooks, spreader bars and the straps. Some sling assemblies use pulley systems which enable the distribution of the loads equally.

For the information about moving the damaged aircraft with the cranes, refer to BD500-A-J09-20-00-02AAA-170A-A.

Prepare to use cranes:

Before you use the cranes, make sure that:

- The aircraft is stable
- The aircraft is defueled
- The electrical systems are de-energized
- The hydraulic systems are de-pressurized.

Calculate the number of cranes required on the basis of weight and center of gravity or contact the aerodrome operator or the aircraft operator.

CAUTION

Make sure that the crane you use can lift the estimated load plus the weight of the lifting equipment before you start to lift the aircraft.

Use cranes with a sufficient capacity. Cranes with more capacity than the required gives much more flexibility in their positioning. Larger capacity cranes are flexible and can be placed away from the aircraft. This allows the greater operating radius around the aircraft. Do not operate the cranes at more than the specified loads. Calculate the boom angle and specified loads.

Note

As the boom angle decreases, the load capacity of the cranes also decreases.

CAUTION

Make sure that the loads on the airframe are less than the allowable loads when you use supports. The supports apply loads that do not occur in normal operation.

Make sure that the strength of the ground surface is sufficient to support the cranes. Refer to BD500-A-J07-50-00-00AAA-811A-A for the roadway preparations.

Use only the trained or qualified persons to operate the crane. The recovery operation manger must give the information, such as, basic weight and centre of gravity position, and lifting height of the aircraft to the crane operator.

Each crane operator must be allowed to speak with the removal operation manager and/or with other crane drivers during all phases of the operation.

Make a visual inspection of all slings.

Prepare to use slings:

Select the number lifting straps needed based on the anticipated loads.

Make sure that the strap width should not be less than 7.87 in. (200 mm).

The straps must be made from nylon or some form of carbon fiber weave.

Do not place the straps near to the damaged frame, stringer or damaged area of the skin.

Put the straps minimum of one frame away from any damage.

If the straps are used for lifting, use an applicable spreader bar, if not a secondary damage may result from the crushing action of the straps.

Note

All straps must be inspected prior to use and should have the load rating and inspection date tags attached.

Site survey - General

Applicability: 50001-54999, 55001-59999

Table of contents

Page

Site survey - General 1
References 1
Description 1
1 General 1
2 Survey 1
3 Inspection 2
3.1 Electrical system 3
3.2 Fluid leak 3
3.3 Landing gear 3

List of tables

Page

1 References 1

References

Table 1 References

Data Module/Technical Publication	Title
None	

Description

1 General

This data module gives the description to do the initial aircraft survey and record all the information.

2 Survey

Before starting the aircraft survey, make sure that the investigation authority has released the aircraft for access.

Examine and record the condition of the items as follow:

- The integrity of the aircraft structure and the landing gear
- Analysis of the soil conditions
- Forecast of current and subsequent weather conditions
- Health and safety issues of personnel
- Environment concerns.

For the minor incident with no injuries, the investigation authority will give verbal approval to start the recovery procedure. In this case, after the recovery procedure, send the detailed report to the investigation authority.

To do the survey, make sure that the aircraft is stable. Examine the aircraft with special attention to the condition of the fuselage, wings, engines and the landing gear. Record all the fluid leaks or visible damage.

Note

Photographs, sketch, measurement, and notes are the part of the recovery records.

For the major accident or the incident, before the investigation the aircraft personnel must lock computer based aircraft technical documents. Do not record the fuel and cargo loads until the aircraft is stable.

This initial aircraft survey will help for initial discussions with the investigative authorities, insurance adjusters, aircraft manufacturers and the repair personnel.

The objective of the investigation is to identify the cause of the accident or the incident to prevent reoccurrence.

For the investigation, the investigation authority can tell the aircraft personnel to remove and release the Flight Data Recorder (FDR) and the Cockpit Voice Recorder (CVR). The investigation authority will give the receipt for the FDR and the CVR with the aircraft registration and the serial number of the part.

3 Inspection

Do not climb, go into, or go below the aircraft to record the damage. Do the visual inspection of visible damage. Record the damage with references of stringer and fuselage frame or station numbers.

Types of damage observed include:

- Crack, crease, buckle, distortion, or torn fuselage and wing panels
- Broken or missing fasteners
- Signs of overheating of the fuselage, wing panels or other components.

The types of damage mentioned above are signs of failed structural components and must be considered as suspect. These failed structural components cannot be relied on to carry their designed loads. It is necessary to do a more detailed inspection on these areas prior to leveling, lifting, or moving the aircraft.

Remove or secure the damaged or loose components that interfere in the recovery process. These components include:

- Landing gear
- Flap sections
- Engine cowlings
- Other non structural parts such as damaged fairings, that shows a sign of damage to other structural components.

3.1 Electrical system

Do examine the electrical system, if there is a damage to the structural item of the aircraft.

If there is no structural or system damage keep the aircraft batteries connected. This can help in recovery process while de-fuelling the aircraft.

3.2 Fluid leak

Examine for the fluid leak. These includes fuel, hydraulic, waste water, potable water, or fluid from cargo compartments.

If fuel leaks are observed, then defuelling of the aircraft is a primary task. Inform the hazardous material cleanup crew about all the fluid leaks other than the potable water.

To control the fluid leaks, cap the lines and manually close the valves. For fuel leaks, defuel the aircraft.

3.3 Landing gear

Examine the landing gear to identify serviceable landing gear.

Secure the serviceable landing gear in extended position by the downlock pins.

On levelled and lifted aircraft, it is possible to extend the landing gear and secure it by downlock pins.

Temporary repairs on the defective, folded, or retracted landing gear is possible, if the spare is available.

In some conditions repair or replacement will take less time than to move the aircraft with the recovery vehicle, which increases the risk of secondary damage to the aircraft.

Intentionally left blank

General and quick reference checklist for aircraft recovery - General

Applicability: 50001-54999, 55001-59999

Table of contents

Page

General and quick reference checklist for aircraft recovery - General..... 1
References..... 1
Description..... 1
1 Introduction..... 1

List of tables

Page

1 References..... 1
2 Quick Reference Checklist..... 1

References

Table 1 References

Data Module/Technical Publication	Title
None	

Description

1 Introduction

These are steps to be followed when planing and executing a recovery.

Table 2 Quick Reference Checklist

Phase	Action
Before you go to the incident site	Obtain initial information about the incident. Make contact with the airport authority, or your own representative. Nominate a person to make a detailed survey on site. Select personnel, equipment, and manuals. Evaluate the need and availability of recovery kits.
On the incident site	Contact the local airport authorities, security or fire department to secure the site. Only persons involved with the recovery get access to the site. Get a map of the area. Formulate a detailed aircraft recovery plan. Get the authorization from the local authorities, to proceed with the recovery operation.

Preparation	Make available communication. Make available access and transportation from and to the site. Establish accommodations and facilities, as necessary. Provide storage and disposal place for items removed from the aircraft. Get the necessary Ground Support Equipment. Provide additional equipment to be used in the recovery, like timber, gravel, sand, steel plates, etc., as necessary.
Recovery	Remove all baggage. Remove cargo. Remove all catering. Remove galley and lavatory waste. Remove major components to lighten the aircraft. Make weight and balance calculation. Make preparation for tethering, lifting as required. Prepare for hangaring . Prepare for parking Clean the aircraft interior and exterior. Finalize the damage report.

A220

Aircraft runway/taxiway excursion - Landing gear compression - Handling procedure

Applicability: 50001-54999, 55001-59999

Table of contents

Page

Aircraft runway/taxiway excursion - Landing gear compression - Handling procedure..... 1
References..... 1
Common information..... 2
Preliminary requirements..... 2
Procedure..... 3
Requirements after job completion..... 10

List of tables

Page

1 References..... 1
2 Required conditions..... 2
3 Support equipment..... 2
4 Consumables, materials, and expendables..... 2
5 Spares..... 3
6 Required conditions..... 10

List of figures

Page

1 NLG compress - With axle jack..... 6
2 NLG compress - With ratchet straps..... 7
3 MLG compress - With axle jack..... 8
4 MLG compress - With ratchet straps..... 9

References

Table 1 References

Data Module/Technical Publication	Title
BD500-A-J07-11-01-01AAA-172A-A	Jacking of the aircraft - Jacking
BD500-A-J07-11-02-01AAA-176A-A	Lowering of the aircraft - Lowering
BD500-A-J12-10-32-01AAA-220C-A	Nose Landing Gear shock strut - Drain nitrogen/ hydraulic fluid
BD500-A-J12-10-32-02AAA-220C-A	Main Landing Gear (MLG) shock strut - Drain nitrogen/ hydraulic fluid
BD500-A-J12-10-32-05AAA-214A-A	Nose Landing Gear (NLG) shock strut servicing - not Jack - Fill with nitrogen
BD500-A-J12-10-32-06AAA-214A-A	Main Landing Gear (MLG) shock strut servicing - not Jack - Fill with nitrogen

Common information

This data module gives the procedure to compress the applicable Main Landing Gear (MLG) and/or Nose Landing Gear (NLG) when bogged (stuck) in sand or mud following an aircraft runway/taxiway excursion. This is done to install a ramp under the gear to help recover the aircraft.

Preliminary requirements

Production maintenance data

Zones	711	Nose landing gear
	731	Main landing gear, left side
	741	Main landing gear, right side

Required conditions

Table 2 Required conditions

Action/Condition	Data Module/Technical publication
Jack the aircraft.	BD500-A-J07-11-01-01AAA-172A-A

Support equipment

Table 3 Support equipment

Name	Identification/Reference	Quantity	Remark
Strap, ratcheting	STD-0919	AR	

Consumables, materials, and expendables

Table 4 Consumables, materials, and expendables

Name	Identification/Reference	Quantity	Remark
None			

Spares

Table 5 Spares

Name	Identification/Reference	Quantity	Remark
None			

Safety conditions

None

Procedure

1 If required, compress the NLG as follows:

1.1 Drain the nitrogen from the NLG. Refer to BD500-A-J12-10-32-01AAA-220C-A.

1.2 If the jacking dome under the NLG is accessible, do the steps that follow:
Refer to Fig. 1

1.2.1 Use an axle jack and the jacking dome under the NLG to compress the gear.

1.2.2 Attach the NLG using a ratchet strap (Commercially available, Pt. No. STD-0919) between the axle and the upper torque link.

Note
Make sure to add protection between landing gear components and straps to avoid damage to the paint.

1.2.3 Remove the axle jack.

1.3 If the jacking dome under the NLG is not accessible, do the step that follows:
Refer to Fig. 2

1.3.1 Use a ratchet strap (Commercially available, Pt. No. STD-0919) between the axle and the upper torque link to compress the NLG.

Note
Make sure to add protection between landing gear components and straps to avoid damage to the paint.

1.4 Install a ramp under the NLG.

2 If required, compress the left MLG as follows:

2.1 Drain the nitrogen from the left MLG. Refer to BD500-A-J12-10-32-02AAA-220C-A.

2.2 If the jacking dome under the left MLG is accessible, do the steps that follow:
Refer to Fig. 3

2.2.1 Use an axle jack and the jacking dome under the left MLG to compress the gear.

2.2.2 Attach the left MLG using a ratchet strap (Commercially available, Pt. No. STD-0919) between the upper and lower torque links.

Note

Make sure to add protection between landing gear components and straps to avoid damage to the paint.

2.2.3 Remove the axle jack.

2.3 If the jacking dome under the left MLG is not accessible, do the step that follows:

Refer to Fig. 4

2.3.1 Use ratchet straps (Commercially available, Pt. No. STD-0919) on the Inboard (INBD) and Outboard (OUTBD) sides of the MLG and between the upper and lower torque links to compress the MLG.

Note

It is necessary to compress the MLG equally with the INBD and OUTBD ratchet straps.

Note

Make sure to add protection between landing gear components and straps to avoid damage to the paint.

2.4 Install a ramp under the left MLG.

3 If required, compress the right MLG as follows:

3.1 Drain the nitrogen from the right MLG. Refer to BD500-A-J12-10-32-02AAA-220C-A.

3.2 If the jacking dome under the right MLG is accessible, do the steps that follow:

Refer to Fig. 3

3.2.1 Use an axle jack and the jacking dome under the right MLG to compress the gear.

3.2.2 Attach the right MLG using a ratchet strap (Commercially available, Pt. No. STD-0919) between the upper and lower torque links.

Note

Make sure to add protection between landing gear components and straps to avoid damage to the paint.

3.2.3 Remove the axle jack.

3.3 If the jacking dome under the right MLG is not accessible, do the step that follows:

Refer to Fig. 4

3.3.1 Use ratchet straps (Commercially available, Pt. No. STD-0919) on the INBD and OUTBD sides of the MLG and between the upper and lower torque links to compress the MLG.

Note

It is necessary to compress the MLG equally with the INBD and OUTBD ratchet straps.

Note

Make sure to add protection between landing gear components and straps to avoid damage to the paint.

3.4 Install a ramp under the right MLG.

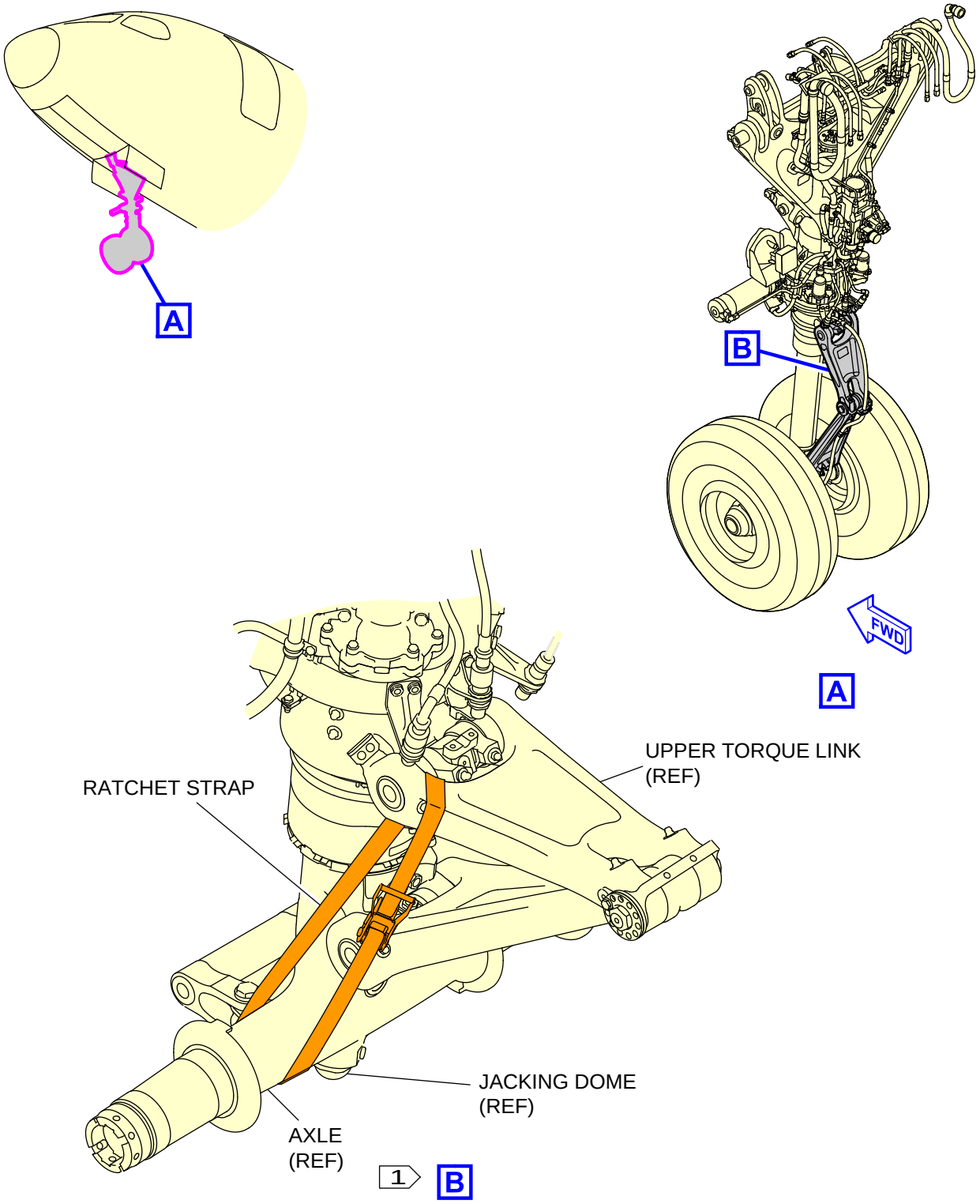

NOTE

1 Some components are not shown for clarity.

ICN-BD500-A-J091300-A-3AB48-54378-A-001-01

Figure 1 NLG compress - With axle jack

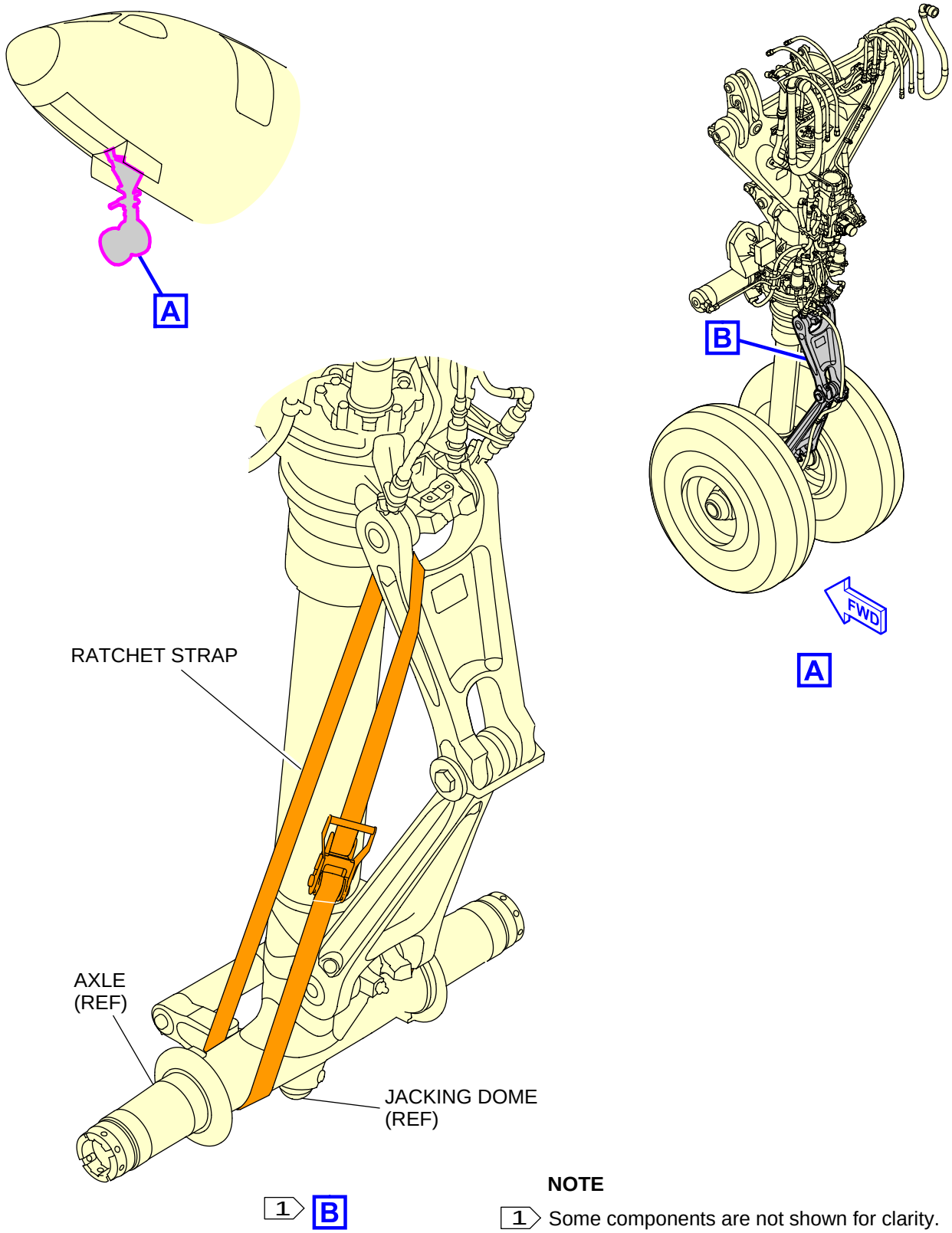

NOTE

1 Some components are not shown for clarity.

ICN-BD500-A-J091300-A-3AB48-54379-A-001-01

Figure 2 NLG compress - With ratchet straps

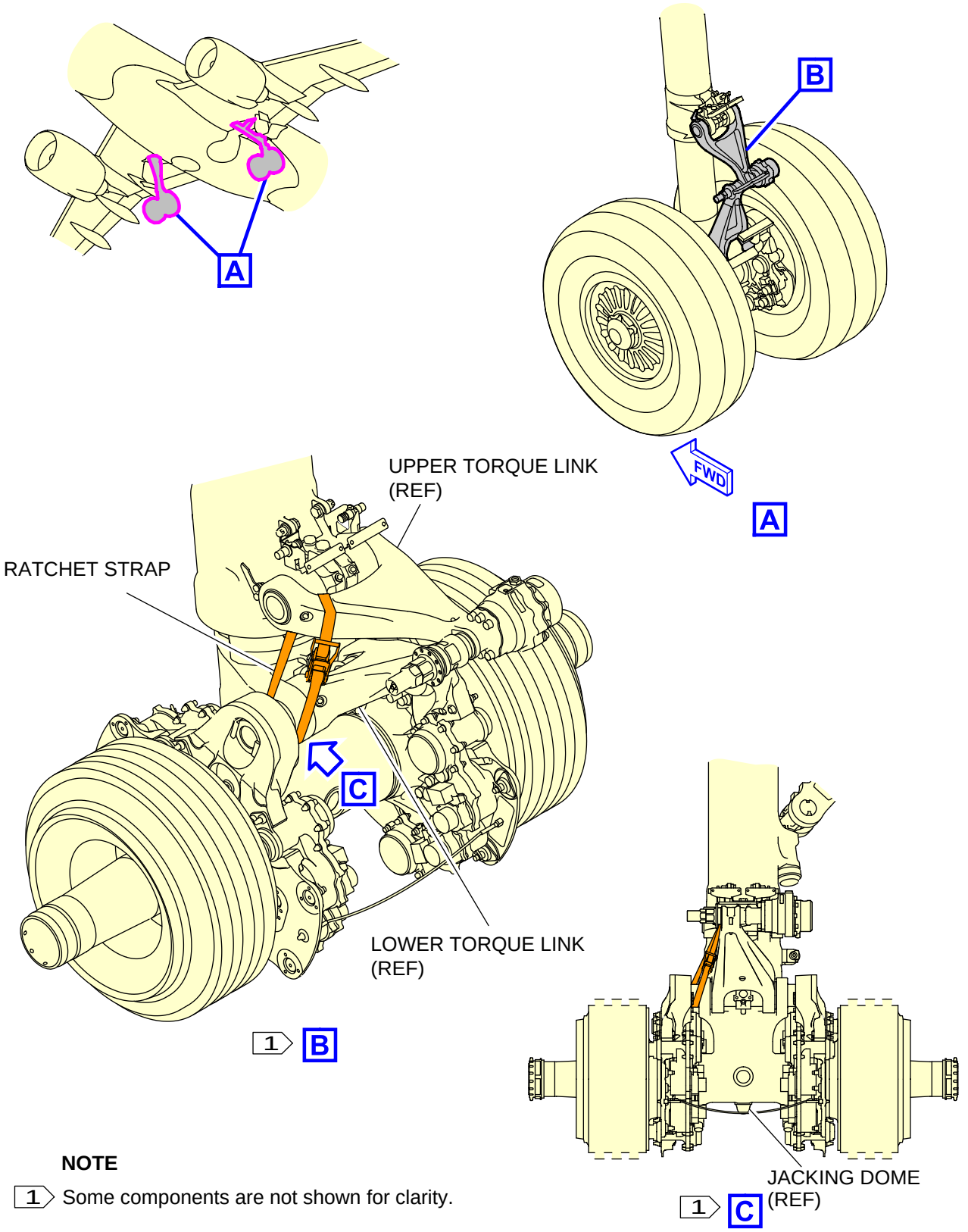

NOTE

1 Some components are not shown for clarity.

ICN-BD500-A-J091300-A-3AB48-54380-A-001-01

Figure 3 MLG compress - With axle jack

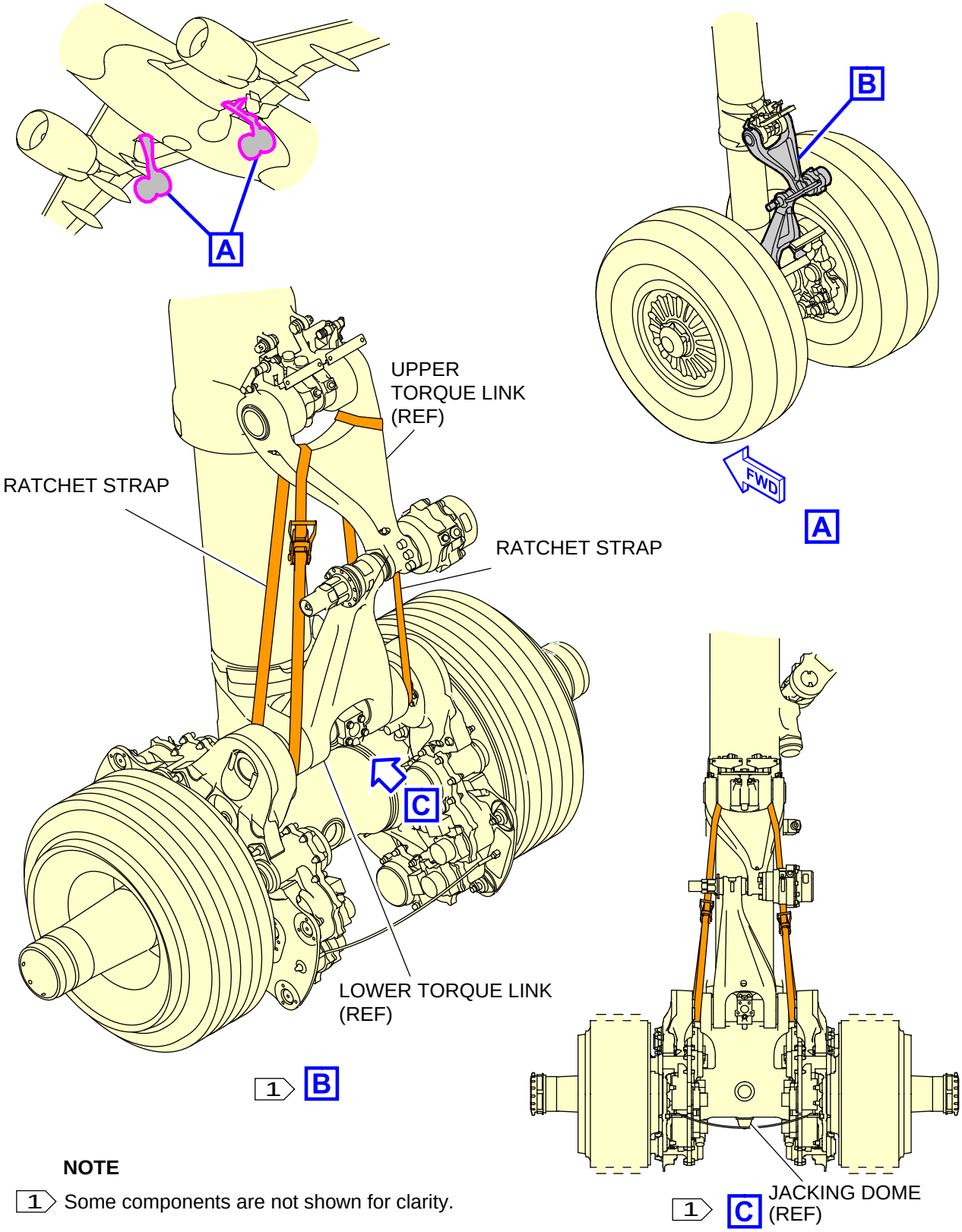

NOTE

1 Some components are not shown for clarity.

ICN-BD500-A-J091300-A-3AB48-54381-A-001-01

Figure 4 MLG compress - With ratchet straps

Requirements after job completion

Required conditions

Table 6 Required conditions

Action/Condition	Data Module/Technical publication
Remove all tools, equipment and unwanted materials from the work area.	
Lower the aircraft.	BD500-A-J07-11-02-01AAA-176A-A
Remove the ratchet straps from the applicable NLG and/or MLG.	
Do the NLG nitrogen servicing for the NLG if compressed.	BD500-A-J12-10-32-05AAA-214A-A
Do the MLG nitrogen servicing for the left and/or right MLG if compressed.	BD500-A-J12-10-32-06AAA-214A-A