A321

AIRCRAFT CHARACTERISTICS
AIRPORT AND MAINTENANCE PLANNING

AC

The content of this document is the property of Airbus.
It is supplied in confidence and commercial security on its contents must be maintained.
It must not be used for any purpose other than that for which it is supplied, nor may information contained in it be disclosed to unauthorized persons.
It must not be reproduced in whole or in part without permission in writing from the owners of the copyright. Requests for reproduction of any data in this document and the media authorized for it must be addressed to Airbus.
© AIRBUS S.A.S. 2005. All rights reserved.

AIRBUS S.A.S.
Customer Services
Technical Data Support and Services
31707 Blagnac Cedex
FRANCE

HIGHLIGHTS

Revision No. 34 - Jul 15/25

LOCATIONS	CHG CODE	DESCRIPTIONS OF CHANGE
CHAPTER 1		
Section 1-1		
Subject 1-1-0		
Purpose	R	PART EFFECTIVITY ADDED/REVISED/ DELETED
Section 1-2		
Subject 1-2-0		
Glossary	R	PART EFFECTIVITY ADDED/REVISED/ DELETED
CHAPTER 2		
Section 2-1		
Subject 2-1-1		
General Aircraft Characteristics Data	R	PART EFFECTIVITY ADDED/REVISED/ DELETED
Section 2-2		
Subject 2-2-0		
General Aircraft Dimensions	R	PART EFFECTIVITY ADDED/REVISED/ DELETED
FIGURE General Aircraft Dimensions	R	ILLUSTRATION REVISED PART EFFECTIVITY ADDED/REVISED/ DELETED
Section 2-3		
Subject 2-3-0		
Ground Clearances	R	PART EFFECTIVITY ADDED/REVISED/ DELETED
FIGURE Ground Clearances - Wing Tip Fence	R	ILLUSTRATION REVISED
FIGURE Ground Clearances - Sharklet	R	
FIGURE Ground Clearances	R	REPLACED "47 000 kg (103 617 lb)" BY "EMPTY WEIGHT FOR MAINTENANCE 52

LOCATIONS	CHG CODE	DESCRIPTIONS OF CHANGE
FIGURE Ground Clearances	R	500 kg (115 743 lb)" IN THE ILLUSTRATION TABLE FOR THE GROUND CLEARANCES.
FIGURE Ground Connections	R	
FIGURE Ground Clearances - Trailing Edge Flaps - Extended	R	ILLUSTRATION REVISED PART EFFECTIVITY ADDED/REVISED/ DELETED
FIGURE Ground Clearances - Flap Tracks - Extended	R	ILLUSTRATION REVISED PART EFFECTIVITY ADDED/REVISED/ DELETED
FIGURE Ground Clearances - Flap Tracks - Retracted	R	ILLUSTRATION REVISED PART EFFECTIVITY ADDED/REVISED/ DELETED
FIGURE Ground Clearances - Flap Tracks - 1 + F	R	ILLUSTRATION REVISED PART EFFECTIVITY ADDED/REVISED/ DELETED
FIGURE Ground Clearances - Aileron Down	R	ILLUSTRATION REVISED PART EFFECTIVITY ADDED/REVISED/ DELETED
FIGURE Ground Clearances - Aileron Up	R	ILLUSTRATION REVISED PART EFFECTIVITY ADDED/REVISED/ DELETED
FIGURE Ground Clearances - Spoilers - Extended	R	ILLUSTRATION REVISED PART EFFECTIVITY ADDED/REVISED/ DELETED
FIGURE Ground Clearances - Leading Edge Slats - Extended	R	ILLUSTRATION REVISED PART EFFECTIVITY ADDED/REVISED/ DELETED
Section 2-4 Subject 2-4-1 Interior Arrangements - Plan View	R	PART EFFECTIVITY ADDED/REVISED/ DELETED
FIGURE Interior Arrangements - Plan View - Typical Configuration - Two-Class	R	ILLUSTRATION REVISED PART EFFECTIVITY ADDED/REVISED/ DELETED

LOCATIONS	CHG CODE	DESCRIPTIONS OF CHANGE
Section 2-5 Subject 2-5-0		
Interior Arrangements - Cross Section	R	PART EFFECTIVITY ADDED/REVISED/ DELETED
FIGURE Interior Arrangements - Cross Section - Economy Class, 6 Abreast - Wider Aisle	R	ILLUSTRATION REVISED PART EFFECTIVITY ADDED/REVISED/ DELETED
FIGURE Interior Arrangements - Cross Section - First-Class	R	ILLUSTRATION REVISED PART EFFECTIVITY ADDED/REVISED/ DELETED
Section 2-6 Subject 2-6-0		
Cargo Compartments	R	PART EFFECTIVITY ADDED/REVISED/ DELETED
FIGURE Cargo Compartments - Loading Combinations	R	ILLUSTRATION REVISED PART EFFECTIVITY ADDED/REVISED/ DELETED
Section 2-7 Subject 2-7-0		
Door Clearances	R	PART EFFECTIVITY ADDED/REVISED/ DELETED
FIGURE Door Identification and Location - Door Identification	R	ILLUSTRATION REVISED PART EFFECTIVITY ADDED/REVISED/ DELETED
FIGURE Doors Clearances - Forward Passenger/Crew Doors	R	ILLUSTRATION REVISED PART EFFECTIVITY ADDED/REVISED/ DELETED
FIGURE Doors Clearances - Emergency Exits	R	ILLUSTRATION REVISED PART EFFECTIVITY ADDED/REVISED/ DELETED
FIGURE Doors Clearances - Aft Passenger/ Crew Doors	R	ILLUSTRATION REVISED PART EFFECTIVITY ADDED/REVISED/ DELETED

LOCATIONS	CHG CODE	DESCRIPTIONS OF CHANGE
FIGURE Door Clearances - Forward Cargo Compartment Door	R	ILLUSTRATION REVISED PART EFFECTIVITY ADDED/REVISED/ DELETED
FIGURE Doors Clearances - Aft Cargo Compartment Door	R	ILLUSTRATION REVISED PART EFFECTIVITY ADDED/REVISED/ DELETED
FIGURE Doors Clearances - Bulk Cargo Compartment Door	R	ILLUSTRATION REVISED PART EFFECTIVITY ADDED/REVISED/ DELETED
FIGURE Doors Clearances - Main Landing Gear Doors	R	ILLUSTRATION REVISED PART EFFECTIVITY ADDED/REVISED/ DELETED
FIGURE Doors Clearances - Radome	R	ILLUSTRATION REVISED PART EFFECTIVITY ADDED/REVISED/ DELETED
FIGURE Doors Clearances - APU and Nose Landing Gear Doors	R	ILLUSTRATION REVISED PART EFFECTIVITY ADDED/REVISED/ DELETED
Section 2-8 Subject 2-8-0		
Escape Slides	R	PART EFFECTIVITY ADDED/REVISED/ DELETED
FIGURE Escape Slides - Location	R	ILLUSTRATION REVISED PART EFFECTIVITY ADDED/REVISED/ DELETED
FIGURE Escape Slides - Dimensions	R	ILLUSTRATION REVISED PART EFFECTIVITY ADDED/REVISED/ DELETED
Section 2-9 Subject 2-9-0		
Landing Gear	R	PART EFFECTIVITY ADDED/REVISED/ DELETED
FIGURE Landing Gear - Main Landing Gear - Twin-Wheel	R	ILLUSTRATION REVISED PART EFFECTIVITY ADDED/REVISED/ DELETED

LOCATIONS	CHG CODE	DESCRIPTIONS OF CHANGE
FIGURE Landing Gear - Main Landing Gear Dimensions - Twin-Wheel	R	ILLUSTRATION REVISED PART EFFECTIVITY ADDED/REVISED/ DELETED
FIGURE Landing Gear - Nose Landing Gear	R	ILLUSTRATION REVISED PART EFFECTIVITY ADDED/REVISED/ DELETED
FIGURE Landing Gear - Nose Landing Gear Dimensions	R	ILLUSTRATION REVISED PART EFFECTIVITY ADDED/REVISED/ DELETED
Landing Gear Maintenance Pits	R	PART EFFECTIVITY ADDED/REVISED/ DELETED
FIGURE Landing Gear Maintenance Pits - Maintenance Pit Envelopes	R	ILLUSTRATION REVISED PART EFFECTIVITY ADDED/REVISED/ DELETED
FIGURE Landing Gear Maintenance Pits - Maintenance Pit Envelopes	R	ILLUSTRATION REVISED PART EFFECTIVITY ADDED/REVISED/ DELETED
Section 2-10 Subject 2-10-0		
Exterior Lighting	R	PART EFFECTIVITY ADDED/REVISED/ DELETED
FIGURE Exterior Lighting	R	ILLUSTRATION REVISED PART EFFECTIVITY ADDED/REVISED/ DELETED
FIGURE Exterior Lighting	R	ILLUSTRATION REVISED PART EFFECTIVITY ADDED/REVISED/ DELETED
FIGURE Exterior Lighting	R	ILLUSTRATION REVISED PART EFFECTIVITY ADDED/REVISED/ DELETED
FIGURE Exterior Lighting	R	ILLUSTRATION REVISED PART EFFECTIVITY ADDED/REVISED/ DELETED
FIGURE Exterior Lighting	R	ILLUSTRATION REVISED PART EFFECTIVITY ADDED/REVISED/ DELETED
FIGURE Exterior Lighting	R	ILLUSTRATION REVISED

LOCATIONS	CHG CODE	DESCRIPTIONS OF CHANGE
		PART EFFECTIVITY ADDED/REVISED/ DELETED
Section 2-11 Subject 2-11-0		
Antennas and Probes Location	R	PART EFFECTIVITY ADDED/REVISED/ DELETED
FIGURE Antennas and Probes - Location	R	ILLUSTRATION REVISED PART EFFECTIVITY ADDED/REVISED/ DELETED
Section 2-12 Subject 2-12-0		
Auxiliary Power Unit	R	PART EFFECTIVITY ADDED/REVISED/ DELETED
FIGURE Auxiliary Power Unit - Access Doors	R	ILLUSTRATION REVISED PART EFFECTIVITY ADDED/REVISED/ DELETED
FIGURE Auxiliary Power Unit - General Layout	R	ILLUSTRATION REVISED PART EFFECTIVITY ADDED/REVISED/ DELETED
Engine and Nacelle	R	PART EFFECTIVITY ADDED/REVISED/ DELETED
FIGURE Power Plant Handling - Major Dimensions - PW 1100G Engine	R	ILLUSTRATION REVISED PART EFFECTIVITY ADDED/REVISED/ DELETED
FIGURE Power Plant Handling - Fan Cowls - PW 1100G Engine	R	ILLUSTRATION REVISED PART EFFECTIVITY ADDED/REVISED/ DELETED
FIGURE Power Plant Handling - Thrust Reverser Halves - PW 1100G Engine	R	ILLUSTRATION REVISED PART EFFECTIVITY ADDED/REVISED/ DELETED
FIGURE Power Plant Handling - Major Dimensions - CFM LEAP-1A Engine	R	ILLUSTRATION REVISED PART EFFECTIVITY ADDED/REVISED/ DELETED
FIGURE Power Plant Handling - Major Dimensions - CFM LEAP-1A Engine	R	ILLUSTRATION REVISED PART EFFECTIVITY ADDED/REVISED/ DELETED

LOCATIONS	CHG CODE	DESCRIPTIONS OF CHANGE
FIGURE Power Plant Handling - Fan Cowls - CFM LEAP-1A Engine	R	ILLUSTRATION REVISED PART EFFECTIVITY ADDED/REVISED/ DELETED
FIGURE Power Plant Handling - Thrust Reverser Halves - CFM LEAP-1A Engine	R	ILLUSTRATION REVISED PART EFFECTIVITY ADDED/REVISED/ DELETED
Section 2-13 Subject 2-13-0		
Leveling, Symmetry and Alignment	R	PART EFFECTIVITY ADDED/REVISED/ DELETED
FIGURE Location of the Leveling Points	R	ILLUSTRATION REVISED PART EFFECTIVITY ADDED/REVISED/ DELETED
Section 2-14 Subject 2-14-0		
Jacking for Maintenance	R	PART EFFECTIVITY ADDED/REVISED/ DELETED
FIGURE Jacking for Maintenance - Jacking Point Locations	R	ILLUSTRATION REVISED PART EFFECTIVITY ADDED/REVISED/ DELETED
FIGURE Jacking for Maintenance - Forward Jacking Point	R	ILLUSTRATION REVISED PART EFFECTIVITY ADDED/REVISED/ DELETED
FIGURE Jacking for Maintenance - Wing Jacking Points	R	ILLUSTRATION REVISED PART EFFECTIVITY ADDED/REVISED/ DELETED
FIGURE Jacking for Maintenance - Safety Stay	R	ILLUSTRATION REVISED PART EFFECTIVITY ADDED/REVISED/ DELETED
FIGURE Jacking for Maintenance - Jacking Design	R	ILLUSTRATION REVISED PART EFFECTIVITY ADDED/REVISED/ DELETED
FIGURE Jacking for Maintenance - Location of Shoring Cradles	R	ILLUSTRATION REVISED PART EFFECTIVITY ADDED/REVISED/ DELETED
CHAPTER 3 Section 3-2		

LOCATIONS	CHG CODE	DESCRIPTIONS OF CHANGE
Subject 3-2-1 Payload/Range - ISA Conditions	R	PART EFFECTIVITY ADDED/REVISED/ DELETED
FIGURE Payload/Range - ISA Conditions	N	ADDED THE ILLUSTRATION "PAYLOAD/ RANGE-ISA CONDITIONS" FOR A321NEO-XLR. ILLUSTRATION ADDED
CHAPTER 4 Section 4-1 Subject 4-1-0 General Information	R	PART EFFECTIVITY ADDED/REVISED/ DELETED
Section 4-2 Subject 4-2-0 Turning Radii	R	PART EFFECTIVITY ADDED/REVISED/ DELETED
FIGURE Turning Radii, No Slip Angle - (Sheet 1)	R	ILLUSTRATION REVISED PART EFFECTIVITY ADDED/REVISED/ DELETED
FIGURE Turning Radii, No Slip Angle - (Sheet 2)	R	ILLUSTRATION REVISED PART EFFECTIVITY ADDED/REVISED/ DELETED
Section 4-3 Subject 4-3-0 Minimum Turning Radii	R	PART EFFECTIVITY ADDED/REVISED/ DELETED
FIGURE Minimum Turning Radii	R	ILLUSTRATION REVISED PART EFFECTIVITY ADDED/REVISED/ DELETED
Section 4-4 Subject 4-4-0 Visibility from Cockpit in Static Position	R	PART EFFECTIVITY ADDED/REVISED/ DELETED
FIGURE Visibility from Cockpit in Static Position	R	ILLUSTRATION REVISED PART EFFECTIVITY ADDED/REVISED/ DELETED

LOCATIONS	CHG CODE	DESCRIPTIONS OF CHANGE
FIGURE Binocular Visibility Through Windows from Captain Eye Position	R	ILLUSTRATION REVISED PART EFFECTIVITY ADDED/REVISED/ DELETED
Section 4-5 Subject 4-5-0		
Runway and Taxiway Turn Paths	R	PART EFFECTIVITY ADDED/REVISED/ DELETED
Subject 4-5-1		
135° Turn - Runway to Taxiway	R	PART EFFECTIVITY ADDED/REVISED/ DELETED
FIGURE 135° Turn - Runway to Taxiway - Cockpit Over Centerline Method	R	ILLUSTRATION REVISED PART EFFECTIVITY ADDED/REVISED/ DELETED
FIGURE 135° Turn - Runway to Taxiway - Judgemental Oversteering Method	R	ILLUSTRATION REVISED PART EFFECTIVITY ADDED/REVISED/ DELETED
Subject 4-5-2		
90° Turn - Runway to Taxiway	R	PART EFFECTIVITY ADDED/REVISED/ DELETED
FIGURE 90° Turn - Runway to Taxiway - Cockpit Over Centerline Method	R	ILLUSTRATION REVISED PART EFFECTIVITY ADDED/REVISED/ DELETED
FIGURE 90° Turn - Runway to Taxiway - Judgemental Oversteering Method	R	ILLUSTRATION REVISED PART EFFECTIVITY ADDED/REVISED/ DELETED
Subject 4-5-3		
180° Turn on a Runway	R	PART EFFECTIVITY ADDED/REVISED/ DELETED
FIGURE 180° Turn on a Runway - Edge of Runway Method	R	ILLUSTRATION REVISED PART EFFECTIVITY ADDED/REVISED/ DELETED
Subject 4-5-4		
135° Turn - Taxiway to Taxiway	R	PART EFFECTIVITY ADDED/REVISED/ DELETED

LOCATIONS	CHG CODE	DESCRIPTIONS OF CHANGE
FIGURE 135° Turn - Taxiway to Taxiway - Cockpit Over Centerline Method	R	ILLUSTRATION REVISED PART EFFECTIVITY ADDED/REVISED/ DELETED
Subject 4-5-5 90° Turn - Taxiway to Taxiway	R	PART EFFECTIVITY ADDED/REVISED/ DELETED
FIGURE 90° Turn - Taxiway to Taxiway - Cockpit Over Centerline Method	R	ILLUSTRATION REVISED PART EFFECTIVITY ADDED/REVISED/ DELETED
Section 4-6 Subject 4-6-0 Runway Holding Bay (Apron)	R	PART EFFECTIVITY ADDED/REVISED/ DELETED
FIGURE Runway Holding Bay (Apron)	R	ILLUSTRATION REVISED PART EFFECTIVITY ADDED/REVISED/ DELETED
Section 4-7 Subject 4-7-0 Minimum Line-Up Distance Corrections	R	PART EFFECTIVITY ADDED/REVISED/ DELETED
FIGURE Minimum Line-Up Distance Corrections - 90° Turn on Runway Entry	R	ILLUSTRATION REVISED PART EFFECTIVITY ADDED/REVISED/ DELETED
FIGURE Minimum Line-Up Distance Corrections - 180° Turn on Runway Turn Pad	R	ILLUSTRATION REVISED PART EFFECTIVITY ADDED/REVISED/ DELETED
FIGURE Minimum Line-Up Distance Corrections - 180° Turn on Runway Width	R	ILLUSTRATION REVISED PART EFFECTIVITY ADDED/REVISED/ DELETED
Section 4-8 Subject 4-8-0 Aircraft Mooring	R	PART EFFECTIVITY ADDED/REVISED/ DELETED
FIGURE Aircraft Mooring	R	ILLUSTRATION REVISED PART EFFECTIVITY ADDED/REVISED/ DELETED
CHAPTER 5		

LOCATIONS	CHG CODE	DESCRIPTIONS OF CHANGE
Section 5-1		
Subject 5-1-1		
Aircraft Servicing Arrangements	R	PART EFFECTIVITY ADDED/REVISED/ DELETED
Subject 5-1-2		
Typical Ramp Layout - Open Apron	R	PART EFFECTIVITY ADDED/REVISED/ DELETED
FIGURE Typical Ramp Layout - Open Apron - Bulk Loading	R	ILLUSTRATION REVISED PART EFFECTIVITY ADDED/REVISED/ DELETED
FIGURE Typical Ramp Layout - Open Apron - ULD Loading	R	ILLUSTRATION REVISED PART EFFECTIVITY ADDED/REVISED/ DELETED
Subject 5-1-3		
Typical Ramp Layout - Gate	R	PART EFFECTIVITY ADDED/REVISED/ DELETED
FIGURE Typical Ramp Layout - Gate	R	ILLUSTRATION REVISED PART EFFECTIVITY ADDED/REVISED/ DELETED
Section 5-2		
Subject 5-2-0		
Terminal Operations - Full Servicing Turn Round Time	R	PART EFFECTIVITY ADDED/REVISED/ DELETED
Section 5-3		
Subject 5-3-0		
Terminal Operations -Transit Turn Round Time	R	PART EFFECTIVITY ADDED/REVISED/ DELETED
Section 5-4		
Subject 5-4-1		
Ground Service Connections Layout	R	PART EFFECTIVITY ADDED/REVISED/ DELETED
FIGURE Ground Service Connections Layout	R	ILLUSTRATION REVISED PART EFFECTIVITY ADDED/REVISED/ DELETED
Subject 5-4-2		

LOCATIONS	CHG CODE	DESCRIPTIONS OF CHANGE
Grounding (Earthing) Points	R	PART EFFECTIVITY ADDED/REVISED/ DELETED
FIGURE Ground Service Connections - Grounding (Earthing) Points - Landing Gear	R	ILLUSTRATION REVISED PART EFFECTIVITY ADDED/REVISED/ DELETED
FIGURE Ground Service Connections - Grounding (Earthing) Points - Wing	R	ILLUSTRATION REVISED PART EFFECTIVITY ADDED/REVISED/ DELETED
FIGURE Ground Service Connections - Grounding (Earthing) Point - Avionics Compartment Door-Frame	R	ILLUSTRATION REVISED PART EFFECTIVITY ADDED/REVISED/ DELETED
FIGURE Ground Service Connections - Grounding (Earthing) Point - Engine Air Intake (If Installed)	R	ILLUSTRATION REVISED PART EFFECTIVITY ADDED/REVISED/ DELETED
Subject 5-4-3		
Hydraulic Servicing	R	PART EFFECTIVITY ADDED/REVISED/ DELETED
FIGURE Ground Service Connections - Green System Ground Service Panel	R	ILLUSTRATION REVISED PART EFFECTIVITY ADDED/REVISED/ DELETED
FIGURE Ground Service Connections - Blue System Ground Service Panel	R	ILLUSTRATION REVISED PART EFFECTIVITY ADDED/REVISED/ DELETED
FIGURE Ground Service Connections - Yellow System Ground Service Panel	R	ILLUSTRATION REVISED PART EFFECTIVITY ADDED/REVISED/ DELETED
FIGURE Ground Service Connections - RAT	R	ILLUSTRATION REVISED PART EFFECTIVITY ADDED/REVISED/ DELETED
Subject 5-4-4		
Electrical System	R	PART EFFECTIVITY ADDED/REVISED/ DELETED

LOCATIONS	CHG CODE	DESCRIPTIONS OF CHANGE
FIGURE Ground Service Connections - External Power Receptacles	R	ILLUSTRATION REVISED PART EFFECTIVITY ADDED/REVISED/ DELETED
Subject 5-4-5 Oxygen System	R	PART EFFECTIVITY ADDED/REVISED/ DELETED
FIGURE Ground Service Connections - Oxygen System	R	ILLUSTRATION REVISED PART EFFECTIVITY ADDED/REVISED/ DELETED
Subject 5-4-6 Fuel System	R	PART EFFECTIVITY ADDED/REVISED/ DELETED
FIGURE Ground Service Connections - Refuel/Defuel Control Panel	R	ILLUSTRATION REVISED PART EFFECTIVITY ADDED/REVISED/ DELETED
FIGURE Ground Service Connections - Refuel/Defuel Couplings	R	ILLUSTRATION REVISED PART EFFECTIVITY ADDED/REVISED/ DELETED
FIGURE Ground Service Connections - Overwing Gravity-Refuel Cap (If Installed)	R	ILLUSTRATION REVISED PART EFFECTIVITY ADDED/REVISED/ DELETED
FIGURE Ground Service Connections - Overpressure Protectors and NACA Vent Intake	R	ILLUSTRATION REVISED PART EFFECTIVITY ADDED/REVISED/ DELETED
Subject 5-4-7 Pneumatic System	R	PART EFFECTIVITY ADDED/REVISED/ DELETED
FIGURE Ground Service Connections - LP and HP Ground Connectors	R	ILLUSTRATION REVISED PART EFFECTIVITY ADDED/REVISED/ DELETED
Subject 5-4-8 Oil System	R	PART EFFECTIVITY ADDED/REVISED/ DELETED

LOCATIONS	CHG CODE	DESCRIPTIONS OF CHANGE
FIGURE Ground Service Connections - APU Oil Tank	R	ILLUSTRATION REVISED PART EFFECTIVITY ADDED/REVISED/ DELETED
FIGURE Ground Service Connections - Engine Oil Tank – CFM LEAP-1A Series Engine	R	ILLUSTRATION REVISED PART EFFECTIVITY ADDED/REVISED/ DELETED
FIGURE Ground Service Connections - IDG Oil Tank – CFM LEAP-1A Series Engine	R	ILLUSTRATION REVISED PART EFFECTIVITY ADDED/REVISED/ DELETED
FIGURE Ground Service Connections - Starter Oil Tank – CFM LEAP-1A Series Engine	R	ILLUSTRATION REVISED PART EFFECTIVITY ADDED/REVISED/ DELETED
FIGURE Ground Service Connections - Engine Oil Tank – PW 1100G Series Engine	R	ILLUSTRATION REVISED PART EFFECTIVITY ADDED/REVISED/ DELETED
FIGURE Ground Service Connections - IDG Oil Tank – PW 1100G Series Engine	R	ILLUSTRATION REVISED PART EFFECTIVITY ADDED/REVISED/ DELETED
FIGURE Ground Service Connections - Starter Oil Tank – PW 1100G Series Engine	R	ILLUSTRATION REVISED PART EFFECTIVITY ADDED/REVISED/ DELETED
Subject 5-4-9 Potable Water System	R	PART EFFECTIVITY ADDED/REVISED/ DELETED
FIGURE Ground Service Connections - Potable Water Ground Service Panels	R	UPDATED THE ILLUSTRATION "PORTABLE WATER GROUND SERVICE PANELS". ILLUSTRATION REVISED PART EFFECTIVITY ADDED/REVISED/ DELETED
FIGURE Ground Service Connections - Potable Water Tank Location	R	ILLUSTRATION REVISED PART EFFECTIVITY ADDED/REVISED/ DELETED

LOCATIONS	CHG CODE	DESCRIPTIONS OF CHANGE
FIGURE Ground Service Connections - Potable Water Tank Location	N	ADDED THE ILLUSTRATION "POTABLE WATER TANK LOCATION" FOR A321NEO-XLR. ILLUSTRATION ADDED
FIGURE Ground Service Connections - Potable Water Ground Service Panels	N	ADDED THE ILLUSTRATION "POTABLE WATER GROUND SERVICE PANELS" FOR A321NEO-XLR. ILLUSTRATION ADDED
Subject 5-4-10 Waste Water System	R	PART EFFECTIVITY ADDED/REVISED/ DELETED NOTE AMENDED
FIGURE Ground Service Connections - Waste Water Ground Service Panel	R	UPDATED THE ILLUSTRATION "WASTE WATER GROUND SERVICE PANEL". ILLUSTRATION REVISED PART EFFECTIVITY ADDED/REVISED/ DELETED
FIGURE Ground Service Connections - Waste Tank Location	R	UPDATED THE ILLUSTRATION "WASTE TANK LOCATION".
FIGURE Ground Service Connections - Waste Tank Location	N	ADDED THE ILLUSTRATION "WASTE TANK LOCATION" FOR A321NEO-XLR. ILLUSTRATION ADDED
Section 5-5 Subject 5-5-0 Engine Starting Pneumatic Requirements	R	PART EFFECTIVITY ADDED/REVISED/ DELETED
Section 5-6 Subject 5-6-0 Ground Pneumatic Power Requirements	R	PART EFFECTIVITY ADDED/REVISED/ DELETED
FIGURE Ground Pneumatic Power Requirements - Heating	R	ILLUSTRATION REVISED PART EFFECTIVITY ADDED/REVISED/ DELETED
FIGURE Ground Pneumatic Power Requirements - Cooling	R	ILLUSTRATION REVISED PART EFFECTIVITY ADDED/REVISED/ DELETED
Section 5-7		

LOCATIONS	CHG CODE	DESCRIPTIONS OF CHANGE
Subject 5-7-0		
Preconditioned Airflow Requirements	R	PART EFFECTIVITY ADDED/REVISED/ DELETED
FIGURE Preconditioned Airflow Requirements	R	ILLUSTRATION REVISED PART EFFECTIVITY ADDED/REVISED/ DELETED
Section 5-8 Subject 5-8-0		
Ground Towing Requirements	R	PART EFFECTIVITY ADDED/REVISED/ DELETED
FIGURE Ground Towing Requirements - PW 1100G Engine	R	ILLUSTRATION REVISED PART EFFECTIVITY ADDED/REVISED/ DELETED
Section 5-9 Subject 5-9-0		
De-Icing and External Cleaning	R	PART EFFECTIVITY ADDED/REVISED/ DELETED
CHAPTER 6 Section 6-1 Subject 6-1-0		
Engine Exhaust Velocities and Temperatures	R	PART EFFECTIVITY ADDED/REVISED/ DELETED
Subject 6-1-1		
Engine Exhaust Velocities Contours - Ground Idle Power	R	PART EFFECTIVITY ADDED/REVISED/ DELETED
FIGURE Engine Exhaust Velocities - Ground Idle Power – CFM56-5B Series Engine	R	UPDATED THE ILLUSTRATION FOR THE SCALE ADJUSTMENT.
FIGURE Engine Exhaust Velocities - Ground Idle Power – IAE V2500 Series Engine	R	UPDATED THE ILLUSTRATION FOR THE SCALE ADJUSTMENT.
FIGURE Engine Exhaust Velocities - Ground Idle Power – CFM LEAP-1A Engine	R	UPDATED THE ILLUSTRATION FOR THE SCALE ADJUSTMENT. ILLUSTRATION REVISED PART EFFECTIVITY ADDED/REVISED/ DELETED

LOCATIONS	CHG CODE	DESCRIPTIONS OF CHANGE
FIGURE Engine Exhaust Velocities - Ground Idle Power – PW 1100G Engine	R	UPDATED THE ILLUSTRATION FOR THE SCALE ADJUSTMENT. ILLUSTRATION REVISED PART EFFECTIVITY ADDED/REVISED/ DELETED
Subject 6-1-2		
Engine Exhaust Temperatures Contours - Ground Idle Power	R	PART EFFECTIVITY ADDED/REVISED/ DELETED
FIGURE Engine Exhaust Temperatures - Ground Idle Power – CFM56-5B Series Engine	R	UPDATED THE ILLUSTRATION FOR THE SCALE ADJUSTMENT.
FIGURE Engine Exhaust Temperatures - Ground Idle Power – IAE V2500 Series Engine	R	UPDATED THE ILLUSTRATION FOR THE SCALE ADJUSTMENT.
FIGURE Engine Exhaust Temperatures - Ground Idle Power – CFM LEAP-1A Engine	R	UPDATED THE ILLUSTRATION FOR THE SCALE ADJUSTMENT. ILLUSTRATION REVISED PART EFFECTIVITY ADDED/REVISED/ DELETED
FIGURE Engine Exhaust Temperatures - Ground Idle Power – PW 1100G Engine	R	UPDATED THE ILLUSTRATION FOR THE SCALE ADJUSTMENT. ILLUSTRATION REVISED PART EFFECTIVITY ADDED/REVISED/ DELETED
Subject 6-1-3		
Engine Exhaust Velocities Contours - Breakaway Power	R	PART EFFECTIVITY ADDED/REVISED/ DELETED
FIGURE Engine Exhaust Velocities - Breakaway Power 12% MTO – CFM LEAP-1A Engine	R	UPDATED THE ILLUSTRATION FOR THE SCALE ADJUSTMENT. ILLUSTRATION REVISED PART EFFECTIVITY ADDED/REVISED/ DELETED

LOCATIONS	CHG CODE	DESCRIPTIONS OF CHANGE
FIGURE Engine Exhaust Velocities - Breakaway Power 12% MTO – PW 1100G Engine	R	UPDATED THE ILLUSTRATION FOR THE SCALE ADJUSTMENT. ILLUSTRATION REVISED PART EFFECTIVITY ADDED/REVISED/ DELETED
FIGURE Engine Exhaust Velocities - Breakaway Power 24% MTO – CFM LEAP-1A Engine	R	UPDATED THE ILLUSTRATION FOR THE SCALE ADJUSTMENT. ILLUSTRATION REVISED PART EFFECTIVITY ADDED/REVISED/ DELETED
FIGURE Engine Exhaust Velocities - Breakaway Power 24% MTO – PW 1100G Engine	R	UPDATED THE ILLUSTRATION FOR THE SCALE ADJUSTMENT. ILLUSTRATION REVISED PART EFFECTIVITY ADDED/REVISED/ DELETED
FIGURE Engine Exhaust Velocities - Breakaway Power - CFM56 Series Engine	R	UPDATED THE ILLUSTRATION FOR THE SCALE ADJUSTMENT.
FIGURE Engine Exhaust Velocities - Breakaway Power 13% MTO - IAE V2500 Series Engine	R	ADDED "13% MTO" IN THE ILLUSTRATION TITLE. UPDATED THE ILLUSTRATION FOR THE SCALE ADJUSTMENT.
FIGURE Engine Exhaust Velocities - Breakaway Power 26% MTO - IAE V2500 Series Engine	N	ADDED ILLUSTRATION TO SHOW ENGINE EXHAUST VELOCITIES CONTOURS OF BREAKAWAY POWER 26 % MTO - IAE V2500 SERIES ENGINE. ILLUSTRATION ADDED
Subject 6-1-4 Engine Exhaust Temperatures Contours - Breakaway Power	R	PART EFFECTIVITY ADDED/REVISED/ DELETED
FIGURE Engine Exhaust Temperatures - Breakaway Power 12% MTO - CFM LEAP-1A Engine	R	UPDATED THE ILLUSTRATION FOR THE SCALE ADJUSTMENT. ILLUSTRATION REVISED PART EFFECTIVITY ADDED/REVISED/ DELETED

LOCATIONS	CHG CODE	DESCRIPTIONS OF CHANGE
FIGURE Engine Exhaust Temperatures - Breakaway Power 12% MTO - PW 1100G Engine	R	UPDATED THE ILLUSTRATION FOR THE SCALE ADJUSTMENT. ILLUSTRATION REVISED PART EFFECTIVITY ADDED/REVISED/ DELETED
FIGURE Engine Exhaust Temperatures - Breakaway Power 24% MTO - CFM LEAP-1A Engine	R	UPDATED THE ILLUSTRATION FOR THE SCALE ADJUSTMENT. ILLUSTRATION REVISED PART EFFECTIVITY ADDED/REVISED/ DELETED
FIGURE Engine Exhaust Temperatures - Breakaway Power 24% MTO - PW 1100G Engine	R	UPDATED THE ILLUSTRATION FOR THE SCALE ADJUSTMENT. ILLUSTRATION REVISED PART EFFECTIVITY ADDED/REVISED/ DELETED
FIGURE Engine Exhaust Temperatures - Breakaway Power - CFM56 Series Engine	R	UPDATED THE ILLUSTRATION FOR THE SCALE ADJUSTMENT.
FIGURE Engine Exhaust Temperatures - Breakaway Power 13% MTO - IAE V2500 Series Engine	R	ADDED "13% MTO" IN THE ILLUSTRATION TITLE. UPDATED THE ILLUSTRATION FOR THE SCALE ADJUSTMENT.
FIGURE Engine Exhaust Temperatures - Breakaway Power 26% MTO - IAE V2500 Series Engine	N	ADDED ILLUSTRATION TO SHOW ENGINE EXHAUST TEMPERATURE CONTOURS OF BREAKAWAY POWER 26 % MTO - V2500 ENGINE SERIES. ILLUSTRATION ADDED
Subject 6-1-5		
Engine Exhaust Velocities Contours - Takeoff Power	R	PART EFFECTIVITY ADDED/REVISED/ DELETED
FIGURE Engine Exhaust Velocities - Takeoff Power – CFM LEAP-1A Engine	R	ILLUSTRATION REVISED PART EFFECTIVITY ADDED/REVISED/ DELETED
FIGURE Engine Exhaust Velocities - Takeoff Power – PW 1100G Engine	R	ILLUSTRATION REVISED PART EFFECTIVITY ADDED/REVISED/ DELETED
Subject 6-1-6		

LOCATIONS	CHG CODE	DESCRIPTIONS OF CHANGE
Engine Exhaust Temperatures Contours - Takeoff Power	R	PART EFFECTIVITY ADDED/REVISED/ DELETED
FIGURE Engine Exhaust Temperatures - Takeoff Power - CFM LEAP-1A Engine	R	ILLUSTRATION REVISED PART EFFECTIVITY ADDED/REVISED/ DELETED
FIGURE Engine Exhaust Temperatures - Takeoff Power - PW 1100G Engine	R	ILLUSTRATION REVISED PART EFFECTIVITY ADDED/REVISED/ DELETED
Section 6-3 Subject 6-3-0 Danger Areas of Engines	R	PART EFFECTIVITY ADDED/REVISED/ DELETED
Subject 6-3-1 Ground Idle Power	R	PART EFFECTIVITY ADDED/REVISED/ DELETED
FIGURE Danger Areas of the Engines - CFM LEAP-1A Engine	R	ILLUSTRATION REVISED PART EFFECTIVITY ADDED/REVISED/ DELETED
FIGURE Danger Areas of the Engines - PW 1100G Engine	R	ILLUSTRATION REVISED PART EFFECTIVITY ADDED/REVISED/ DELETED
Subject 6-3-2 Breakaway Power	R	PART EFFECTIVITY ADDED/REVISED/ DELETED
FIGURE Danger Areas of the Engines - CFM LEAP-1A Engine	R	ILLUSTRATION REVISED PART EFFECTIVITY ADDED/REVISED/ DELETED
FIGURE Danger Areas of the Engines - PW 1100G Engine	R	ILLUSTRATION REVISED PART EFFECTIVITY ADDED/REVISED/ DELETED
Subject 6-3-3 Take Off Power	R	PART EFFECTIVITY ADDED/REVISED/ DELETED

LOCATIONS	CHG CODE	DESCRIPTIONS OF CHANGE
FIGURE Danger Areas of the Engine - CFM LEAP-1A Engine	R	ILLUSTRATION REVISED PART EFFECTIVITY ADDED/REVISED/ DELETED
FIGURE Danger Areas of the Engine - PW 1100G Engine	R	ILLUSTRATION REVISED PART EFFECTIVITY ADDED/REVISED/ DELETED
Section 6-4 Subject 6-4-1		
APU - APIC & GARRETT	R	PART EFFECTIVITY ADDED/REVISED/ DELETED
FIGURE Exhaust Velocities and Temperatures - APU – APIC & GARRETT	R	ILLUSTRATION REVISED PART EFFECTIVITY ADDED/REVISED/ DELETED
CHAPTER 7 Section 7-1 Subject 7-1-0		
General Information	R	PART EFFECTIVITY ADDED/REVISED/ DELETED
Section 7-2 Subject 7-2-0		
Landing Gear Footprint	R	PART EFFECTIVITY ADDED/REVISED/ DELETED
FIGURE Landing Gear Footprint	R	UPDATED THE ILLUSTRATION FOR LANDING GEAR FOOTPRINT. ILLUSTRATION REVISED PART EFFECTIVITY ADDED/REVISED/ DELETED
FIGURE Landing Gear Footprint	R	UPDATED THE ILLUSTRATION FOR LANDING GEAR FOOTPRINT.
Section 7-3 Subject 7-3-0		
Maximum Pavement Loads	R	PART EFFECTIVITY ADDED/REVISED/ DELETED
FIGURE Maximum Pavement Loads for A321NEO	R	UPDATED THE ILLUSTRATION FOR MAXIMUM PAVEMENT LOADS. ILLUSTRATION REVISED

LOCATIONS	CHG CODE	DESCRIPTIONS OF CHANGE
FIGURE Maximum Pavement Loads for A321NEO-XLR	R	PART EFFECTIVITY ADDED/REVISED/ DELETED ADDED A321NEO-XLR IN THE ILLUSTRATION TITLE. UPDATED THE ILLUSTRATION FOR MAXIMUM PAVEMENT LOADS. ILLUSTRATION REVISED
Section 7-4 Subject 7-4-0 Landing Gear Loading on Pavement	R	PART EFFECTIVITY ADDED/REVISED/ DELETED
Section 7-5 Subject 7-5-0 Flexible Pavement Requirements - US Army Corps of Engineers Design Method	R	PART EFFECTIVITY ADDED/REVISED/ DELETED
Section 7-6 Subject 7-6-0 Flexible Pavement Requirements - LCN Conversion	R	PART EFFECTIVITY ADDED/REVISED/ DELETED
Section 7-7 Subject 7-7-0 Rigid Pavement Requirements - Portland Cement Association Design Method	R	PART EFFECTIVITY ADDED/REVISED/ DELETED
Section 7-8 Subject 7-8-0 Rigid Pavement Requirements - LCN Conversion	R	PART EFFECTIVITY ADDED/REVISED/ DELETED
Section 7-9 Subject 7-9-0 Aircraft Classification Number - Flexible and Rigid Pavements	R	PART EFFECTIVITY ADDED/REVISED/ DELETED
FIGURE ACN Table for A321NEO	R	UPDATED THE ILLUSTRATION FOR ACN TABLE.

LOCATIONS	CHG CODE	DESCRIPTIONS OF CHANGE
		ILLUSTRATION REVISED PART EFFECTIVITY ADDED/REVISED/ DELETED
FIGURE ACN Table for A321NEO-XLR	R	.ADDED A321NEO-XLR IN THE ILLUSTRATION TITLE. UPDATED THE ILLUSTRATION FOR ACN TABLE. ILLUSTRATION REVISED
Section 7-10 Subject 7-10-0		
ACR/PCR Reporting System - Flexible and Rigid Pavements	R	PART EFFECTIVITY ADDED/REVISED/ DELETED
FIGURE ACR Table	R	UPDATED THE ILLUSTRATION FOR ACR TABLE. ILLUSTRATION REVISED PART EFFECTIVITY ADDED/REVISED/ DELETED
FIGURE ACR Table	R	UPDATED THE ILLUSTRATION FOR ACR TABLE.
CHAPTER 8 Section 8-0 Subject 8-0-0		
Scaled Drawings	R	PART EFFECTIVITY ADDED/REVISED/ DELETED
FIGURE Scaled Drawing	R	ILLUSTRATION REVISED PART EFFECTIVITY ADDED/REVISED/ DELETED
CHAPTER 10 Section 10-0 Subject 10-0-0		
Aircraft Rescue and Fire Fighting	R	PART EFFECTIVITY ADDED/REVISED/ DELETED
FIGURE Front Page	R	ILLUSTRATION REVISED PART EFFECTIVITY ADDED/REVISED/ DELETED
FIGURE Batteries Location and Access	R	ILLUSTRATION REVISED PART EFFECTIVITY ADDED/REVISED/ DELETED

LOCATIONS	CHG CODE	DESCRIPTIONS OF CHANGE
FIGURE Wheel/Brake Overheat - Wheel Safety Area	R	ILLUSTRATION REVISED PART EFFECTIVITY ADDED/REVISED/ DELETED
FIGURE Composite Materials	R	ILLUSTRATION REVISED PART EFFECTIVITY ADDED/REVISED/ DELETED
FIGURE L/G Ground Lock Safety Devices	R	ILLUSTRATION REVISED PART EFFECTIVITY ADDED/REVISED/ DELETED
FIGURE Emergency Evacuation Devices	R	ILLUSTRATION REVISED PART EFFECTIVITY ADDED/REVISED/ DELETED
FIGURE Pax/Crew Doors and Emergency Exits	R	ILLUSTRATION REVISED PART EFFECTIVITY ADDED/REVISED/ DELETED
FIGURE Overwing Emergency Doors	R	ILLUSTRATION REVISED PART EFFECTIVITY ADDED/REVISED/ DELETED
FIGURE FWD and AFT Lower Deck Cargo Doors	R	ILLUSTRATION REVISED PART EFFECTIVITY ADDED/REVISED/ DELETED
FIGURE Control Panels	R	ILLUSTRATION REVISED PART EFFECTIVITY ADDED/REVISED/ DELETED
FIGURE APU Access Door	R	ILLUSTRATION REVISED PART EFFECTIVITY ADDED/REVISED/ DELETED
FIGURE Structural Break-in Points	R	ILLUSTRATION REVISED PART EFFECTIVITY ADDED/REVISED/ DELETED

LIST OF EFFECTIVE CONTENT

Revision No. 34 - Jul 15/25

CONTENT	CHG CODE	LAST REVISION DATE
CHAPTER 1		
Subject 1-1-0 Purpose	R	Jul 15/25
Subject 1-2-0 Glossary	R	Jul 15/25
CHAPTER 2		
Subject 2-1-1 General Aircraft Characteristics Data	R	Jul 15/25
Subject 2-2-0 General Aircraft Dimensions	R	Jul 15/25
FIGURE General Aircraft Dimensions - Wing Tip Fence		Feb 01/18
FIGURE General Aircraft Dimensions		May 01/15
FIGURE General Aircraft Dimensions	R	Jul 15/25
Subject 2-3-0 Ground Clearances	R	Jul 15/25
FIGURE Ground Clearances - Wing Tip Fence	R	Jul 15/25
FIGURE Ground Clearances - Sharklet	R	Jul 15/25
FIGURE Ground Clearances	R	Jul 15/25
FIGURE Ground Clearances	R	Jul 15/25

CONTENT	CHG CODE	LAST REVISION DATE
FIGURE Ground Connections	R	Jul 15/25
FIGURE Ground Clearances - Trailing Edge Flaps - Extended	R	Jul 15/25
FIGURE Ground Clearances - Flap Tracks - Extended	R	Jul 15/25
FIGURE Ground Clearances - Flap Tracks - Retracted	R	Jul 15/25
FIGURE Ground Clearances - Flap Tracks - 1 + F	R	Jul 15/25
FIGURE Ground Clearances - Aileron Down	R	Jul 15/25
FIGURE Ground Clearances - Aileron Up	R	Jul 15/25
FIGURE Ground Clearances - Spoilers - Extended	R	Jul 15/25
FIGURE Ground Clearances - Leading Edge Slats - Extended	R	Jul 15/25
Subject 2-4-1 Interior Arrangements - Plan View	R	Jul 15/25
FIGURE Interior Arrangements - Plan View - Typical Configuration - Single-Class, High Density		May 01/16
FIGURE Interior Arrangements - Plan View - Typical Configuration - Two-Class		May 01/16
FIGURE Interior Arrangements - Plan View - Typical Configuration - Two-Class	R	Jul 15/25
Subject 2-5-0 Interior Arrangements - Cross Section	R	Jul 15/25

CONTENT	CHG CODE	LAST REVISION DATE
FIGURE Interior Arrangements - Cross Section - Economy Class, 6 Abreast - Wider Aisle	R	Jul 15/25
FIGURE Interior Arrangements - Cross Section - First-Class	R	Jul 15/25
Subject 2-6-0 Cargo Compartments	R	Jul 15/25
FIGURE Cargo Compartments - Locations and Dimensions		Dec 01/23
FIGURE Cargo Compartments - Locations		Jun 01/24
FIGURE Cargo Compartments - Dimensions		Jun 01/24
FIGURE Cargo Compartments - Loading Combinations	R	Jul 15/25
FIGURE Cargo Compartments - Loading Combinations		Dec 01/23
Subject 2-7-0 Door Clearances	R	Jul 15/25
FIGURE Door Identification and Location - Door Identification		Dec 01/18
FIGURE Door Identification and Location - Door Identification	R	Jul 15/25
FIGURE Doors Clearances - Forward Passenger/Crew Doors	R	Jul 15/25
FIGURE Doors Clearances - Emergency Exits		Dec 01/18
FIGURE Doors Clearances - Emergency Exits	R	Jul 15/25
FIGURE Doors Clearances - Aft Passenger/Crew Doors	R	Jul 15/25

CONTENT	CHG CODE	LAST REVISION DATE
FIGURE Door Clearances - Forward Cargo Compartment Door		May 01/15
FIGURE Door Clearances - Forward Cargo Compartment Door	R	Jul 15/25
FIGURE Doors Clearances - Aft Cargo Compartment Door	R	Jul 15/25
FIGURE Doors Clearances - Bulk Cargo Compartment Door	R	Jul 15/25
FIGURE Doors Clearances - Main Landing Gear Doors	R	Jul 15/25
FIGURE Doors Clearances - Radome	R	Jul 15/25
FIGURE Doors Clearances - APU and Nose Landing Gear Doors	R	Jul 15/25
Subject 2-8-0 Escape Slides	R	Jul 15/25
FIGURE Escape Slides - Location		Feb 01/18
FIGURE Escape Slides - Dimensions		Dec 01/18
FIGURE Escape Slides - Location	R	Jul 15/25
FIGURE Escape Slides - Dimensions	R	Jul 15/25
Subject 2-9-0 Landing Gear	R	Jul 15/25
FIGURE Landing Gear - Main Landing Gear - Twin-Wheel	R	Jul 15/25
FIGURE Landing Gear - Main Landing Gear Dimensions - Twin-Wheel	R	Jul 15/25
FIGURE Landing Gear - Nose Landing Gear	R	Jul 15/25

CONTENT	CHG CODE	LAST REVISION DATE
FIGURE Landing Gear - Nose Landing Gear Dimensions	R	Jul 15/25
Landing Gear Maintenance Pits	R	Jul 15/25
FIGURE Landing Gear Maintenance Pits - Maintenance Pit Envelopes	R	Jul 15/25
FIGURE Landing Gear Maintenance Pits - Maintenance Pit Envelopes	R	Jul 15/25
Subject 2-10-0 Exterior Lighting	R	Jul 15/25
FIGURE Exterior Lighting	R	Jul 15/25
FIGURE Exterior Lighting	R	Jul 15/25
FIGURE Exterior Lighting	R	Jul 15/25
FIGURE Exterior Lighting	R	Jul 15/25
FIGURE Exterior Lighting	R	Jul 15/25
FIGURE Exterior Lighting	R	Jul 15/25
Subject 2-11-0 Antennas and Probes Location	R	Jul 15/25
FIGURE Antennas and Probes - Location	R	Jul 15/25
Subject 2-12-0 Auxiliary Power Unit	R	Jul 15/25
FIGURE Auxiliary Power Unit - Access Doors	R	Jul 15/25

CONTENT	CHG CODE	LAST REVISION DATE
FIGURE Auxiliary Power Unit - General Layout	R	Jul 15/25
Engine and Nacelle	R	Jul 15/25
FIGURE Power Plant Handling - Major Dimensions - CFM56 Series Engine		May 01/14
FIGURE Power Plant Handling - Major Dimensions - CFM56 Series Engine		May 01/14
FIGURE Power Plant Handling - Fan Cowls - CFM56 Series Engine		May 01/17
FIGURE Power Plant Handling - Thrust Reverser Cowls - CFM56 Series Engine		May 01/17
FIGURE Power Plant Handling - Major Dimensions - IAE V2500 Series Engine		May 01/14
FIGURE Power Plant Handling - Major Dimensions - IAE V2500 Series Engine		May 01/14
FIGURE Power Plant Handling - Fan Cowls - IAE V2500 Series Engine		May 01/17
FIGURE Power Plant Handling - Thrust Reverser Halves - IAE V2500 Series Engine		May 01/17
FIGURE Power Plant Handling - Major Dimensions - PW 1100G Engine	R	Jul 15/25
FIGURE Power Plant Handling - Fan Cowls - PW 1100G Engine	R	Jul 15/25
FIGURE Power Plant Handling - Thrust Reverser Halves - PW 1100G Engine	R	Jul 15/25

CONTENT	CHG CODE	LAST REVISION DATE
FIGURE Power Plant Handling - Major Dimensions - CFM LEAP-1A Engine	R	Jul 15/25
FIGURE Power Plant Handling - Major Dimensions - CFM LEAP-1A Engine	R	Jul 15/25
FIGURE Power Plant Handling - Fan Cowls - CFM LEAP-1A Engine	R	Jul 15/25
FIGURE Power Plant Handling - Thrust Reverser Halves - CFM LEAP-1A Engine	R	Jul 15/25
Subject 2-13-0 Leveling, Symmetry and Alignment	R	Jul 15/25
FIGURE Location of the Leveling Points	R	Jul 15/25
Subject 2-14-0 Jacking for Maintenance	R	Jul 15/25
FIGURE Jacking for Maintenance - Jacking Point Locations	R	Jul 15/25
FIGURE Jacking for Maintenance - Forward Jacking Point	R	Jul 15/25
FIGURE Jacking for Maintenance - Wing Jacking Points	R	Jul 15/25
FIGURE Jacking for Maintenance - Safety Stay	R	Jul 15/25
FIGURE Jacking for Maintenance - Jacking Design		Mar 01/22
FIGURE Jacking for Maintenance - Jacking Design	R	Jul 15/25
FIGURE Jacking for Maintenance - Jacking Design		May 01/23
FIGURE Jacking for Maintenance - Location of Shoring Cradles	R	Jul 15/25

CONTENT	CHG CODE	LAST REVISION DATE
Jacking of the Landing Gear		May 01/17
FIGURE Jacking of the Landing Gear - MLG Jacking Point Location - Twin Wheels		May 01/14
FIGURE Jacking of the Landing Gear - MLG Jacking with Cantilever Jack - Twin Wheels		May 01/14
FIGURE Jacking of the Landing Gear - NLG Jacking - Point Location		May 01/14
FIGURE Jacking of the Landing Gear - Maximum Load Capacity to Lift Each Jacking Point		May 01/17
FIGURE Jacking of the Landing Gear - Maximum Load Capacity to Lift Each Jacking Point		May 01/17
CHAPTER 3		
Subject 3-1-0 General Information		Jun 01/24
Subject 3-2-1 Payload/Range - ISA Conditions	R	Jul 15/25
FIGURE Payload/Range - ISA Conditions		May 01/15
FIGURE Payload/Range - ISA Conditions - Sharklet		May 01/15
FIGURE Payload/Range - ISA Conditions		Dec 01/18
FIGURE Payload/Range - ISA Conditions	N	Jul 15/25
Subject 3-3-1 Take-Off Weight Limitation - ISA Conditions		Dec 01/21

CONTENT	CHG CODE	LAST REVISION DATE
FIGURE Take-Off Weight Limitation - ISA Conditions - CFM56 Series Engine		May 01/14
FIGURE Take-Off Weight Limitation - ISA Conditions - IAE V2500 Series Engine		May 01/14
FIGURE Take-Off Weight Limitation - ISA Conditions - LEA-1A Series Engine		Dec 01/21
FIGURE Take-Off Weight Limitation - ISA Conditions - PW Engines		Dec 01/21
Subject 3-3-2 Take-Off Weight Limitation - ISA +15°C (+27°F) Conditions		Dec 01/21
FIGURE Take-Off Weight Limitation - ISA +15°C (+27°F) Conditions - CFM56 Series Engine		Dec 01/18
FIGURE Take-Off Weight Limitation - ISA +15°C (+27°F) Conditions - IAE V2500 Series Engine		Dec 01/18
FIGURE Take-Off Weight Limitation - ISA +15°C (+27°F) Conditions - LEAP-1A Series Engine		Dec 01/18
FIGURE Take-Off Weight Limitation - ISA +15°C (+27°F) Conditions - PW Engines		Dec 01/21
Subject 3-3-3 Aerodrome Reference Code		Jun 01/24
Subject 3-4-1 Landing Field Length - ISA Conditions		Dec 01/21
FIGURE Landing Field Length - ISA Conditions - CFM56 Series Engine		May 01/14

CONTENT	CHG CODE	LAST REVISION DATE
FIGURE Landing Field Length - ISA Conditions - IAE V2500 Series Engine		May 01/14
FIGURE Landing Field Length - ISA Conditions - Leap Engines		Dec 01/21
FIGURE Landing Field Length - ISA Conditions - PW Engines		Dec 01/21
Subject 3-5-0 Final Approach Speed		Feb 01/18
CHAPTER 4		
Subject 4-1-0 General Information	R	Jul 15/25
Subject 4-2-0 Turning Radii	R	Jul 15/25
FIGURE Turning Radii, No Slip Angle - (Sheet 1)	R	Jul 15/25
FIGURE Turning Radii, No Slip Angle - (Sheet 2)	R	Jul 15/25
Subject 4-3-0 Minimum Turning Radii	R	Jul 15/25
FIGURE Minimum Turning Radii	R	Jul 15/25
Subject 4-4-0 Visibility from Cockpit in Static Position	R	Jul 15/25
FIGURE Visibility from Cockpit in Static Position	R	Jul 15/25
FIGURE Binocular Visibility Through Windows from Captain Eye Position	R	Jul 15/25
Subject 4-5-0		

CONTENT	CHG CODE	LAST REVISION DATE
Runway and Taxiway Turn Paths	R	Jul 15/25
Subject 4-5-1		
135° Turn - Runway to Taxiway	R	Jul 15/25
FIGURE 135° Turn - Runway to Taxiway - Cockpit Over Centerline Method	R	Jul 15/25
FIGURE 135° Turn - Runway to Taxiway - Judgemental Oversteering Method	R	Jul 15/25
Subject 4-5-2		
90° Turn - Runway to Taxiway	R	Jul 15/25
FIGURE 90° Turn - Runway to Taxiway - Cockpit Over Centerline Method	R	Jul 15/25
FIGURE 90° Turn - Runway to Taxiway - Judgemental Oversteering Method	R	Jul 15/25
Subject 4-5-3		
180° Turn on a Runway	R	Jul 15/25
FIGURE 180° Turn on a Runway - Edge of Runway Method	R	Jul 15/25
Subject 4-5-4		
135° Turn - Taxiway to Taxiway	R	Jul 15/25
FIGURE 135° Turn - Taxiway to Taxiway - Cockpit Over Centerline Method	R	Jul 15/25
Subject 4-5-5		
90° Turn - Taxiway to Taxiway	R	Jul 15/25

CONTENT	CHG CODE	LAST REVISION DATE
FIGURE 90° Turn - Taxiway to Taxiway - Cockpit Over Centerline Method	R	Jul 15/25
Subject 4-6-0 Runway Holding Bay (Apron)	R	Jul 15/25
FIGURE Runway Holding Bay (Apron)	R	Jul 15/25
Subject 4-7-0 Minimum Line-Up Distance Corrections	R	Jul 15/25
FIGURE Minimum Line-Up Distance Corrections - 90° Turn on Runway Entry	R	Jul 15/25
FIGURE Minimum Line-Up Distance Corrections - 180° Turn on Runway Turn Pad	R	Jul 15/25
FIGURE Minimum Line-Up Distance Corrections - 180° Turn on Runway Width	R	Jul 15/25
Subject 4-8-0 Aircraft Mooring	R	Jul 15/25
FIGURE Aircraft Mooring	R	Jul 15/25
CHAPTER 5 Subject 5-1-1 Aircraft Servicing Arrangements	R	Jul 15/25
Subject 5-1-2 Typical Ramp Layout - Open Apron	R	Jul 15/25
FIGURE Typical Ramp Layout - Open Apron - Bulk Loading	R	Jul 15/25
FIGURE Typical Ramp Layout - Open Apron - ULD Loading	R	Jul 15/25

CONTENT	CHG CODE	LAST REVISION DATE
Subject 5-1-3 Typical Ramp Layout - Gate	R	Jul 15/25
FIGURE Typical Ramp Layout - Gate	R	Jul 15/25
Subject 5-2-0 Terminal Operations - Full Servicing Turn Round Time	R	Jul 15/25
FIGURE Full Servicing Turn Round Time Chart		Dec 01/18
FIGURE Full Servicing Turn Round Time Chart with 206 Seats - Full Servicing Turn Round Time Chart for CLS		May 01/23
FIGURE Full Servicing Turn Round Time Chart with 206 Seats - Full Servicing Turn Round Time Chart for Bulk Loading System		May 01/23
FIGURE Full Servicing Turn Round Time Chart with 244 Seats - Full Servicing Turn Round Time Chart for CLS		May 01/23
FIGURE Full Servicing Turn Round Time Chart with 244 Seats - Full Servicing Turn Round Time Chart for Bulk Loading System		May 01/23
Subject 5-3-0 Terminal Operations -Transit Turn Round Time	R	Jul 15/25
FIGURE Outstation Turn Round Time Chart		Dec 01/18
Subject 5-4-1 Ground Service Connections Layout	R	Jul 15/25
FIGURE Ground Service Connections Layout	R	Jul 15/25
Subject 5-4-2 Grounding (Earthing) Points	R	Jul 15/25

CONTENT	CHG CODE	LAST REVISION DATE
FIGURE Ground Service Connections - Grounding (Earthing) Points - Landing Gear	R	Jul 15/25
FIGURE Ground Service Connections - Grounding (Earthing) Points - Wing	R	Jul 15/25
FIGURE Ground Service Connections - Grounding (Earthing) Point - Avionics Compartment Door-Frame	R	Jul 15/25
FIGURE Ground Service Connections - Grounding (Earthing) Point - Engine Air Intake (If Installed)	R	Jul 15/25
Subject 5-4-3 Hydraulic Servicing	R	Jul 15/25
FIGURE Ground Service Connections - Green System Ground Service Panel	R	Jul 15/25
FIGURE Ground Service Connections - Blue System Ground Service Panel	R	Jul 15/25
FIGURE Ground Service Connections - Yellow System Ground Service Panel	R	Jul 15/25
FIGURE Ground Service Connections - RAT	R	Jul 15/25
Subject 5-4-4 Electrical System	R	Jul 15/25
FIGURE Ground Service Connections - External Power Receptacles	R	Jul 15/25
Subject 5-4-5 Oxygen System	R	Jul 15/25
FIGURE Ground Service Connections - Oxygen System	R	Jul 15/25

CONTENT	CHG CODE	LAST REVISION DATE
Subject 5-4-6 Fuel System	R	Jul 15/25
FIGURE Ground Service Connections - Refuel/Defuel Control Panel	R	Jul 15/25
FIGURE Ground Service Connections - Refuel/Defuel Couplings	R	Jul 15/25
FIGURE Ground Service Connections - Overwing Gravity-Refuel Cap (If Installed)	R	Jul 15/25
FIGURE Ground Service Connections - Overpressure Protectors and NACA Vent Intake	R	Jul 15/25
FIGURE Primary Protection - Unpressurized-Compartment Ventilation Air-Intake		May 01/23
Subject 5-4-7 Pneumatic System	R	Jul 15/25
FIGURE Ground Service Connections - LP and HP Ground Connectors	R	Jul 15/25
Subject 5-4-8 Oil System	R	Jul 15/25
FIGURE Ground Service Connections - Engine Oil Tank – CFM56 Series Engine		May 01/14
FIGURE Ground Service Connections - IDG Oil Tank – CFM56 Series Engine		May 01/14
FIGURE Ground Service Connections - Starter Oil Tank – CFM56 Series Engine		May 01/14
FIGURE Ground Service Connections - Engine Oil Tank – IAE V2500 Series Engine		May 01/14

CONTENT	CHG CODE	LAST REVISION DATE
FIGURE Ground Service Connections - IDG Oil Tank – IAE V2500 Series Engine		May 01/14
FIGURE Ground Service Connections - Starter Oil Tank – IAE V2500 Series Engine		May 01/14
FIGURE Ground Service Connections - APU Oil Tank	R	Jul 15/25
FIGURE Ground Service Connections - Engine Oil Tank – CFM LEAP-1A Series Engine	R	Jul 15/25
FIGURE Ground Service Connections - IDG Oil Tank – CFM LEAP-1A Series Engine	R	Jul 15/25
FIGURE Ground Service Connections - Starter Oil Tank – CFM LEAP-1A Series Engine	R	Jul 15/25
FIGURE Ground Service Connections - Engine Oil Tank – PW 1100G Series Engine	R	Jul 15/25
FIGURE Ground Service Connections - IDG Oil Tank – PW 1100G Series Engine	R	Jul 15/25
FIGURE Ground Service Connections - Starter Oil Tank – PW 1100G Series Engine	R	Jul 15/25
Subject 5-4-9 Potable Water System	R	Jul 15/25
FIGURE Ground Service Connections - Potable Water Ground Service Panels	R	Jul 15/25
FIGURE Ground Service Connections - Potable Water Tank Location	R	Jul 15/25
FIGURE Ground Service Connections - Potable Water Tank Location	N	Jul 15/25

CONTENT	CHG CODE	LAST REVISION DATE
FIGURE Ground Service Connections - Potable Water Ground Service Panels	N	Jul 15/25
Subject 5-4-10 Waste Water System	R	Jul 15/25
FIGURE Ground Service Connections - Waste Water Ground Service Panel	R	Jul 15/25
FIGURE Ground Service Connections - Waste Tank Location	R	Jul 15/25
FIGURE Ground Service Connections - Waste Tank Location	N	Jul 15/25
Subject 5-5-0 Engine Starting Pneumatic Requirements	R	Jul 15/25
Subject 5-6-0 Ground Pneumatic Power Requirements	R	Jul 15/25
FIGURE Ground Pneumatic Power Requirements - Heating	R	Jul 15/25
FIGURE Ground Pneumatic Power Requirements - Cooling	R	Jul 15/25
Subject 5-7-0 Preconditioned Airflow Requirements	R	Jul 15/25
FIGURE Preconditioned Airflow Requirements	R	Jul 15/25
Subject 5-8-0 Ground Towing Requirements	R	Jul 15/25
FIGURE Ground Towing Requirements		Dec 01/23
FIGURE Ground Towing Requirements - PW 1100G Engine	R	Jul 15/25

CONTENT	CHG CODE	LAST REVISION DATE
Subject 5-9-0 De-Icing and External Cleaning	R	Jul 15/25
CHAPTER 6		
Subject 6-1-0 Engine Exhaust Velocities and Temperatures	R	Jul 15/25
Subject 6-1-1 Engine Exhaust Velocities Contours - Ground Idle Power	R	Jul 15/25
FIGURE Engine Exhaust Velocities - Ground Idle Power – CFM56-5B Series Engine	R	Jul 15/25
FIGURE Engine Exhaust Velocities - Ground Idle Power – IAE V2500 Series Engine	R	Jul 15/25
FIGURE Engine Exhaust Velocities - Ground Idle Power – CFM LEAP-1A Engine	R	Jul 15/25
FIGURE Engine Exhaust Velocities - Ground Idle Power – PW 1100G Engine	R	Jul 15/25
Subject 6-1-2 Engine Exhaust Temperatures Contours - Ground Idle Power	R	Jul 15/25
FIGURE Engine Exhaust Temperatures - Ground Idle Power – CFM56-5B Series Engine	R	Jul 15/25
FIGURE Engine Exhaust Temperatures - Ground Idle Power – IAE V2500 Series Engine	R	Jul 15/25
FIGURE Engine Exhaust Temperatures - Ground Idle Power – CFM LEAP-1A Engine	R	Jul 15/25

CONTENT	CHG CODE	LAST REVISION DATE
FIGURE Engine Exhaust Temperatures - Ground Idle Power – PW 1100G Engine	R	Jul 15/25
Subject 6-1-3 Engine Exhaust Velocities Contours - Breakaway Power	R	Jul 15/25
FIGURE Engine Exhaust Velocities - Breakaway Power 12% MTO – CFM LEAP-1A Engine	R	Jul 15/25
FIGURE Engine Exhaust Velocities - Breakaway Power 12% MTO – PW 1100G Engine	R	Jul 15/25
FIGURE Engine Exhaust Velocities - Breakaway Power 24% MTO – CFM LEAP-1A Engine	R	Jul 15/25
FIGURE Engine Exhaust Velocities - Breakaway Power 24% MTO – PW 1100G Engine	R	Jul 15/25
FIGURE Engine Exhaust Velocities - Breakaway Power - CFM56 Series Engine	R	Jul 15/25
FIGURE Engine Exhaust Velocities - Breakaway Power 13% MTO - IAE V2500 Series Engine	R	Jul 15/25
FIGURE Engine Exhaust Velocities - Breakaway Power 26% MTO - IAE V2500 Series Engine	N	Jul 15/25
Subject 6-1-4 Engine Exhaust Temperatures Contours - Breakaway Power	R	Jul 15/25
FIGURE Engine Exhaust Temperatures - Breakaway Power 12% MTO - CFM LEAP-1A Engine	R	Jul 15/25
FIGURE Engine Exhaust Temperatures - Breakaway Power 12% MTO - PW 1100G Engine	R	Jul 15/25

CONTENT	CHG CODE	LAST REVISION DATE
FIGURE Engine Exhaust Temperatures - Breakaway Power 24% MTO - CFM LEAP-1A Engine	R	Jul 15/25
FIGURE Engine Exhaust Temperatures - Breakaway Power 24% MTO - PW 1100G Engine	R	Jul 15/25
FIGURE Engine Exhaust Temperatures - Breakaway Power - CFM56 Series Engine	R	Jul 15/25
FIGURE Engine Exhaust Temperatures - Breakaway Power 13% MTO - IAE V2500 Series Engine	R	Jul 15/25
FIGURE Engine Exhaust Temperatures - Breakaway Power 26% MTO - IAE V2500 Series Engine	N	Jul 15/25
Subject 6-1-5 Engine Exhaust Velocities Contours - Takeoff Power	R	Jul 15/25
FIGURE Engine Exhaust Velocities - Takeoff Power – CFM56-5B Series Engine		Dec 01/15
FIGURE Engine Exhaust Velocities - Takeoff Power – IAE V2500 Series Engine		Dec 01/15
FIGURE Engine Exhaust Velocities - Takeoff Power – CFM LEAP-1A Engine	R	Jul 15/25
FIGURE Engine Exhaust Velocities - Takeoff Power – PW 1100G Engine	R	Jul 15/25
Subject 6-1-6 Engine Exhaust Temperatures Contours - Takeoff Power	R	Jul 15/25
FIGURE Engine Exhaust Temperatures - Takeoff Power – CFM56-5B Series Engine		Dec 01/15

CONTENT	CHG CODE	LAST REVISION DATE
FIGURE Engine Exhaust Temperatures - Takeoff Power – IAE V2500 Series Engine		Dec 01/15
FIGURE Engine Exhaust Temperatures - Takeoff Power - CFM LEAP-1A Engine	R	Jul 15/25
FIGURE Engine Exhaust Temperatures - Takeoff Power - PW 1100G Engine	R	Jul 15/25
Subject 6-3-0 Danger Areas of Engines	R	Jul 15/25
Subject 6-3-1 Ground Idle Power	R	Jul 15/25
FIGURE Danger Areas of the Engines - CFM56-5B Series Engine		Dec 01/18
FIGURE Danger Areas of the Engines - IAE V2500 Series Engine		Dec 01/18
FIGURE Danger Areas of the Engines - CFM LEAP-1A Engine	R	Jul 15/25
FIGURE Danger Areas of the Engines - PW 1100G Engine	R	Jul 15/25
Subject 6-3-2 Breakaway Power	R	Jul 15/25
FIGURE Danger Areas of the Engines - CFM56-5B Series Engine		Nov 01/19
FIGURE Danger Areas of the Engines - IAE V2500 Series Engine		Nov 01/19
FIGURE Danger Areas of the Engines - CFM LEAP-1A Engine	R	Jul 15/25
FIGURE Danger Areas of the Engines - PW 1100G Engine	R	Jul 15/25
Subject 6-3-3		

CONTENT	CHG CODE	LAST REVISION DATE
Take Off Power	R	Jul 15/25
FIGURE Danger Areas of the Engine - CFM56-5B Series Engine		Dec 01/18
FIGURE Danger Areas of the Engine - IAE V2500 Series Engine		Dec 01/18
FIGURE Danger Areas of the Engine - CFM LEAP-1A Engine	R	Jul 15/25
FIGURE Danger Areas of the Engine - PW 1100G Engine	R	Jul 15/25
Subject 6-4-1 APU - APIC & GARRETT	R	Jul 15/25
FIGURE Exhaust Velocities and Temperatures - APU – APIC & GARRETT	R	Jul 15/25
CHAPTER 7		
Subject 7-1-0 General Information	R	Jul 15/25
Subject 7-2-0 Landing Gear Footprint	R	Jul 15/25
FIGURE Landing Gear Footprint		May 01/14
FIGURE Landing Gear Footprint		Dec 01/18
FIGURE Landing Gear Footprint	R	Jul 15/25
FIGURE Landing Gear Footprint	R	Jul 15/25
Subject 7-3-0 Maximum Pavement Loads	R	Jul 15/25

CONTENT	CHG CODE	LAST REVISION DATE
FIGURE Maximum Pavement Loads for A321-100		Mar 01/22
FIGURE Maximum Pavement Loads for A321-200		Mar 01/22
FIGURE Maximum Pavement Loads for A321NEO	R	Jul 15/25
FIGURE Maximum Pavement Loads for A321NEO-XLR	R	Jul 15/25
Subject 7-4-0 Landing Gear Loading on Pavement	R	Jul 15/25
Subject 7-5-0 Flexible Pavement Requirements - US Army Corps of Engineers Design Method	R	Jul 15/25
Subject 7-6-0 Flexible Pavement Requirements - LCN Conversion	R	Jul 15/25
Subject 7-7-0 Rigid Pavement Requirements - Portland Cement Association Design Method	R	Jul 15/25
Subject 7-8-0 Rigid Pavement Requirements - LCN Conversion	R	Jul 15/25
Subject 7-9-0 Aircraft Classification Number - Flexible and Rigid Pavements	R	Jul 15/25
FIGURE ACN Table for A321-100		Mar 01/22
FIGURE ACN Table for A321-200		Mar 01/22
FIGURE ACN Table for A321NEO	R	Jul 15/25

CONTENT	CHG CODE	LAST REVISION DATE
FIGURE ACN Table for A321NEO-XLR	R	Jul 15/25
Subject 7-10-0 ACR/PCR Reporting System - Flexible and Rigid Pavements	R	Jul 15/25
FIGURE ACR Table		Mar 01/22
FIGURE ACR Table		Mar 01/22
FIGURE ACR Table	R	Jul 15/25
FIGURE ACR Table	R	Jul 15/25
CHAPTER 8		
Subject 8-0-0 Scaled Drawings	R	Jul 15/25
FIGURE Scaled Drawing		Dec 01/15
FIGURE Scaled Drawing		Dec 01/15
FIGURE Scaled Drawing	R	Jul 15/25
CHAPTER 10		
Subject 10-0-0 Aircraft Rescue and Fire Fighting	R	Jul 15/25
FIGURE Front Page	R	Jul 15/25
FIGURE Highly Flammable and Hazardous Materials and Components		Nov 01/19
FIGURE Highly Flammable and Hazardous Materials and Components		Jun 01/24
FIGURE Batteries Location and Access	R	Jul 15/25

CONTENT	CHG CODE	LAST REVISION DATE
FIGURE Wheel/Brake Overheat - Wheel Safety Area	R	Jul 15/25
FIGURE Composite Materials		Jun 01/24
FIGURE Composite Materials	R	Jul 15/25
FIGURE L/G Ground Lock Safety Devices	R	Jul 15/25
FIGURE Emergency Evacuation Devices		Jun 01/24
FIGURE Emergency Evacuation Devices	R	Jul 15/25
FIGURE Pax/Crew Doors and Emergency Exits	R	Jul 15/25
FIGURE Overwing Emergency Doors	R	Jul 15/25
FIGURE FWD and AFT Lower Deck Cargo Doors	R	Jul 15/25
FIGURE Control Panels	R	Jul 15/25
FIGURE APU Access Door	R	Jul 15/25
FIGURE Aircraft Ground Clearances		Jun 01/24
FIGURE Aircraft Ground Clearances		Jun 01/24
FIGURE Structural Break-in Points	R	Jul 15/25

TABLE OF CONTENTS

1 SCOPE
1-1-0 Introduction
1-2-0 Glossary
2 AIRCRAFT DESCRIPTION
2-1-1 General Aircraft Characteristics Data
2-2-0 General Aircraft Dimensions
2-3-0 Ground Clearances
2-4-1 Interior Arrangements - Plan View
2-5-0 Interior Arrangements - Cross Section
2-6-0 Cargo Compartments
2-7-0 Door Clearances and Location
2-8-0 Escape Slides
2-9-0 Landing Gear
2-10-0 Exterior Lighting
2-11-0 Antennas and Probes Location
2-12-0 Power Plant
2-13-0 Leveling, Symmetry and Alignment
2-14-0 Jacking
3 AIRCRAFT PERFORMANCE
3-1-0 General Information
3-2-1 Payload / Range - ISA Conditions
3-3-1 Take-off Weight Limitation - ISA Conditions
3-3-2 Take-off Weight Limitation - ISA +15°C (+59°F) Conditions
3-3-3 Aerodrome Reference Code
3-4-1 Landing Field Length - ISA Conditions
3-5-0 Final Approach Speed
4 GROUND MANEUVERING
4-1-0 General Information
4-2-0 Turning Radii
4-3-0 Minimum Turning Radii
4-4-0 Visibility from Cockpit in Static Position
4-5-0 Runway and Taxiway Turn Paths
4-5-1 135° Turn - Runway to Taxiway

4-5-2 90° Turn - Runway to Taxiway
4-5-3 180° Turn on a Runway
4-5-4 135° Turn - Taxiway to Taxiway
4-5-5 90° Turn - Taxiway to Taxiway
4-6-0 Runway Holding Bay (Apron)
4-7-0 Minimum Line-Up Distance Corrections
4-8-0 Aircraft Mooring
5 TERMINAL SERVICING
5-1-1 Aircraft Servicing Arrangements
5-1-2 Typical Ramp Layout - Open Apron
5-1-3 Typical Ramp Layout - Gate
5-2-0 Terminal Operations - Full Servicing Turn Round Time Chart
5-3-0 Terminal Operation - Outstation Turn Round Time Chart
5-4-1 Ground Service Connections
5-4-2 Grounding Points
5-4-3 Hydraulic System
5-4-4 Electrical System
5-4-5 Oxygen System
5-4-6 Fuel System
5-4-7 Pneumatic System
5-4-8 Oil System
5-4-9 Potable Water System
5-4-10 Waste Water System
5-5-0 Engine Starting Pneumatic Requirements
5-6-0 Ground Pneumatic Power Requirements
5-7-0 Preconditioned Airflow Requirements
5-8-0 Ground Towing Requirements
5-9-0 De-Icing and External Cleaning
6 OPERATING CONDITIONS
6-1-0 Engine Exhaust Velocities and Temperatures
6-1-1 Engine Exhaust Velocities Contours - Ground Idle Power
6-1-2 Engine Exhaust Temperatures Contours - Ground Idle Power
6-1-3 Engine Exhaust Velocities Contours - Breakaway Power
6-1-4 Engine Exhaust Temperatures Contours - Breakaway Power
6-1-5 Engine Exhaust Velocities Contours - Takeoff Power
6-1-6 Engine Exhaust Temperatures Contours - Takeoff Power
6-3-0 Danger Areas of Engines

6-3-1 Ground Idle Power
6-3-2 Breakaway Power
6-3-3 Max Take Off Power
6-4-1 APU
7 PAVEMENT DATA
7-1-0 General Information
7-2-0 Landing Gear Footprint
7-3-0 Maximum Pavement Loads
7-4-0 Landing Gear Loading on Pavement
7-5-0 Flexible Pavement Requirements - U.S. Army Corps of Engineers Design Method
7-6-0 Flexible Pavement Requirements - LCN Conversion
7-7-0 Rigid Pavement Requirements - Portland Cement Association Design Method
7-8-0 Rigid Pavement Requirements - LCN Conversion
7-9-0 ACN/PCN Reporting System - Flexible and Rigid Pavements
7-10-0 ACR/PCR Reporting System - Flexible And Rigid Pavements
8 SCALED DRAWINGS
8-0-0 SCALED DRAWINGS
10 AIRCRAFT RESCUE AND FIRE FIGHTING
10-0-0 AIRCRAFT RESCUE AND FIRE FIGHTING

SCOPE

1-1-0 Introduction

****ON A/C A321-100 A321-200 A321neo A321neo-XLR**

Purpose

1. General

The A321 AIRCRAFT CHARACTERISTICS – AIRPORT AND MAINTENANCE PLANNING (AC) manual is issued for A321-100 and A321-200 series aircraft equipped with wing-tip fences or sharklets, to provide necessary data to airport operators, airlines and Maintenance/Repair Organizations (MRO) for airport and maintenance facilities planning.

The A320 family is the world's best-selling single-aisle aircraft. An A320 takes off or lands somewhere in the world every 1.5 seconds of every day, the family has recorded more than 117 million cycles since entry-into-service and records a best-in-class dispatch reliability of 99.7%.

The new engine option together with the large wingtip devices (sharklets) and a very innovative cabin, A321neo is the most cost-efficient aircraft ever. In its maximum seating capacity, A321neo can accommodates up to 244 passengers and shows the lowest seat mile cost on the single-aisle aircraft market.

A321neo has three versions:
- A321neo
- A321LR
- A321XLR.

A321neo is perfectly suited to fit into very competitive markets with a maximum passenger range of 3 400 nm (6 297 km) in a high-density layout.

A321LR flies up to 4 000 nm (7 408 km) with 206 passengers because of the installation of Additional Centre Tanks (ACTs). Ideally suited to fly transatlantic routes, A321LR allows the airlines to go into new long-haul markets that were not accessed before with the available single-aisle aircraft. Operators can make the cabin in a single-class layout or in a state of the art two class configuration which includes full-flat seats for a true long-haul comfort.

A321XLR extends the range up to 4 700 nm (8 705 km) with an increased maximum takeoff weight of 101 tons. A321XLR has a permanent Rear Centre Tank (RCT) (carrying 12900 l (3408 US gal) of fuel) and an optional forward ACT.

Unbeatable in fuel efficiency, A321neo offers outstanding environmental performance with 20% lower fuel burn per seat and reduced carbon dioxide emissions.Correspondence concerning this publication must be directed to:

Correspondence concerning this publication must be directed to:

AIRBUS S.A.S.
Technical Data Support and Services
2 Rond-point DEWOITINE
BP90112
31703 BLAGNAC CEDEX
FRANCE

1-2-0 Glossary

****ON A/C A321-100 A321-200 A321neo A321neo-XLR**

Glossary

1. List of Abbreviations

A/C	Aircraft
ACF	Aircraft Cabin Flex
ACN	Aircraft Classification Number
ACR	Aircraft Classification Rating
AMM	Aircraft Maintenance Manual
APU	Auxiliary Power Unit
B/C	Business Class
CBR	California Bearing Ratio
CC	Cargo Compartment
CG	Center of Gravity
CKPT	Cockpit
E	Young’s Modulus
ELEC	Electric, Electrical, Electricity
ESWL	Equivalent Single Wheel Load
FAA	Federal Aviation Administration
F/C	First Class
FDL	Fuselage Datum Line
FR	Frame
FSTE	Full Size Trolley Equivalent
FWD	Forward
GPU	Ground Power Unit
GSE	Ground Support Equipment
HYD	Hydraulic
ICAO	International Civil Aviation Organisation
IDG	Integrated Drive Generator
ISA	International Standard Atmosphere
L	Left
L	Radius of relative stiffness
LCN	Load Classification Number
LD	Lower Deck
L/G	Landing Gear
LH	Left Hand
LPS	Last Pax Seating

MAC	Mean Aerodynamic Chord
MAX	Maximum
MIN	Minimum
MLG	Main Landing Gear
NLG	Nose Landing Gear
OAT	Outside Air Temperature
OHSC	Overhead Stowage Compartment
PAX	Passenger
PBB	Passenger Boarding Bridge
PCA	Portland Cement Association
PCN	Pavement Classification Number
PCR	Pavement Classification Rating
PRM	Passenger with Reduced Mobility
R	Right
RH	Right Hand
ULD	Unit Load Device
US	United States
WV	Weight Variant
Y/C	Tourist Class

2. Design Weight Terminology

- Maximum Design Ramp Weight (MRW):
  Maximum weight for ground maneuver (including weight of taxi and run-up fuel) as limited by aircraft strength and airworthiness requirements. It is also called Maximum Design Taxi Weight (MTW).
- Maximum Design Landing Weight (MLW):
  Maximum weight for landing as limited by aircraft strength and airworthiness requirements.
- Maximum Design Takeoff Weight (MTOW):
  Maximum weight for takeoff as limited by aircraft strength and airworthiness requirements. (This is the maximum weight at start of the take-off run).
- Maximum Design Zero Fuel Weight (MZFW):
  Maximum permissible weight of the aircraft without usable fuel.
- Maximum Seating Capacity:
  Maximum number of passengers specifically certified or anticipated for certification.
- Usable Volume:
  Usable volume available for cargo, pressurized fuselage, passenger compartment and cockpit.
- Water Volume:
  Maximum volume of cargo compartment.
- Usable Fuel:
  Fuel available for aircraft propulsion.

AIRCRAFT DESCRIPTION

2-1-1 General Aircraft Characteristics Data

****ON A/C A321-100 A321-200 A321neo A321neo-XLR**

General Aircraft Characteristics Data

****ON A/C A321-100**

1. The following table gives characteristics of A321-100 models, these data are specific to each weight variant:

Aircraft Characteristics				
	WV000	WV002	WV003	WV004
Maximum Ramp Weight (MRW) Maximum Taxi Weight (MTW)	83 400 kg (183 865 lb)	83 400 kg (183 865 lb)	85 400 kg (188 275 lb)	78 400 kg (172 842 lb)
Maximum Take-Off Weight (MTOW)	83 000 kg (182 984 lb)	83 000 kg (182 984 lb)	85 000 kg (187 393 lb)	78 000 kg (171 961 lb)
Maximum Landing Weight (MLW)	73 500 kg (162 040 lb)	74 500 kg (164 244 lb)	74 500 kg (164 244 lb)	73 500 kg (162 040 lb)
Maximum Zero Fuel Weight (MZFW)	69 500 kg (153 221 lb)	70 500 kg (155 426 lb)	70 500 kg (155 426 lb)	69 500 kg (153 221 lb)

Aircraft Characteristics				
	WV005	WV006	WV007	WV008
Maximum Ramp Weight (MRW) Maximum Taxi Weight (MTW)	83 400 kg (183 865 lb)	78 400 kg (172 842 lb)	80 400 kg (177 252 lb)	89 400 kg (197 093 lb)
Maximum Take-Off Weight (MTOW)	83 000 kg (182 984 lb)	78 000 kg (171 961 lb)	80 000 kg (176 370 lb)	89 000 kg (196 211 lb)
Maximum Landing Weight (MLW)	75 000 kg (165 347 lb)	74 500 kg (164 244 lb)	73 500 kg (162 040 lb)	75 500 kg (166 449 lb)
Maximum Zero Fuel Weight (MZFW)	71 000 kg (156 528 lb)	70 500 kg (155 426 lb)	69 500 kg (153 221 lb)	71 500 kg (157 630 lb)

****ON A/C A321-200**

2. The following table gives characteristics of A321-200 models, these data are specific to each weight variant:

Aircraft Characteristics				
	WV000	WV001	WV002	WV003
Maximum Ramp Weight (MRW) Maximum Taxi Weight (MTW)	89 400 kg (197 093 lb)	93 400 kg (205 912 lb)	89 400 kg (197 093 lb)	91 400 kg (201 502 lb)
Maximum Take-Off Weight (MTOW)	89 000 kg (196 211 lb)	93 000 kg (205 030 lb)	89 000 kg (196 211 lb)	91 000 kg (200 621 lb)
Maximum Landing Weight (MLW)	75 500 kg (166 449 lb)	77 800 kg (171 520 lb)	77 800 kg (171 520 lb)	77 800 kg (171 520 lb)
Maximum Zero Fuel Weight (MZFW)	71 500 kg (157 630 lb)	73 800 kg (162 701 lb)	73 800 kg (162 701 lb)	73 800 kg (162 701 lb)

Aircraft Characteristics				
	WV004	WV005	WV006	WV007
Maximum Ramp Weight (MRW) Maximum Taxi Weight (MTW)	87 400 kg (192 684 lb)	85 400 kg (188 275 lb)	83 400 kg (183 865 lb)	83 400 kg (183 865 lb)
Maximum Take-Off Weight (MTOW)	87 000 kg (191 802 lb)	85 000 kg (187 393 lb)	83 000 kg (182 984 lb)	83 000 kg (182 984 lb)
Maximum Landing Weight (MLW)	75 500 kg (166 449 lb)	75 500 kg (166 449 lb)	75 500 kg (166 449 lb)	73 500 kg (162 040 lb)
Maximum Zero Fuel Weight (MZFW)	71 500 kg (157 630 lb)	71 500 kg (157 630 lb)	71 500 kg (157 630 lb)	69 500 kg (153 221 lb)

Aircraft Characteristics				
	WV008	WV009	WV010	WV011
Maximum Ramp Weight (MRW) Maximum Taxi Weight (MTW)	80 400 kg (177 252 lb)	78 400 kg (172 842 lb)	85 400 kg (188 275 lb)	93 900 kg (207 014 lb)
Maximum Take-Off Weight (MTOW)	80 000 kg (176 370 lb)	78 000 kg (171 961 lb)	85 000 kg (187 393 lb)	93 500 kg (206 132 lb)
Maximum Landing Weight (MLW)	73 500 kg (162 040 lb)	73 500 kg (162 040 lb)	77 800 kg (171 520 lb)	77 800 kg (171 520 lb)
Maximum Zero Fuel Weight (MZFW)	69 500 kg (153 221 lb)	69 500 kg (153 221 lb)	73 800 kg (162 701 lb)	73 800 kg (162 701 lb)

****ON A/C A321neo**

3. The following table gives characteristics of A321NEO models, these data are specific to each weight variant:

Aircraft Characteristics									
	WV050	WV051	WV052	WV053	WV056	WV057	WV059	WV063	WV065
Maximum Ramp Weight (MRW) Maximum Taxi Weight (MTW)	89 400 kg (197 093 lb)	89 400 kg (197 093 lb)	93 900 kg (207 014 lb)	93 900 kg (207 014 lb)	92 900 kg (204 809 lb)	92 900 kg (204 809 lb)	92 400 kg (203 707 lb)	91 400 kg (201 502 lb)	90 900 kg (200 400 lb)
Maximum Take-Off Weight (MTOW)	89 000 kg (196 211 lb)	89 000 kg (196 211 lb)	93 500 kg (206 132 lb)	93 500 kg (206 132 lb)	92 500 kg (203 928 lb)	92 500 kg (203 928 lb)	92 000 kg (202 825 lb)	91 000 kg (200 621 lb)	90 500 kg (199 518 lb)
Maximum Landing Weight (MLW)	77 300 kg (170 417 lb)	79 200 kg (174 606 lb)	77 300 kg (170 417 lb)	79 200 kg (174 606 lb)	77 300 kg (170 417 lb)	79 200 kg (174 606 lb)	79 200 kg (174 606 lb)	79 200 kg (174 606 lb)	79 200 kg (174 606 lb)
Maximum Zero Fuel Weight (MZFW)	73 300 kg (161 599 lb)	75 600 kg (166 669 lb)	73 300 kg (161 599 lb)	75 600 kg (166 669 lb)	73 300 kg (161 599 lb)	75 600 kg (166 669 lb)	75 600 kg (166 669 lb)	75 600 kg (166 669 lb)	75 600 kg (166 669 lb)

Aircraft Characteristics		
	WV067	WV070
Maximum Ramp Weight (MRW) Maximum Taxi Weight (MTW)	90 400 kg (199 298 lb)	80 400 kg (177 252 lb)
Maximum Take-Off Weight (MTOW)	90 000 kg (198 416 lb)	80 000 kg (176 370 lb)
Maximum Landing Weight (MLW)	79 200 kg (174 606 lb)	71 500 kg (157 630 lb)
Maximum Zero Fuel Weight (MZFW)	75 600 kg (166 669 lb)	67 000 kg (147 710 lb)

****ON A/C A321neo-XLR**

4. The following table gives characteristics of A321NEO-XLR models, these data are specific to each weight variant:

	Aircraft Characteristics	
	WV072	WV100
Maximum Ramp Weight (MRW) Maximum Taxi Weight (MTW)	97 400 kg (214 730 lb)	101 400 kg (223 549 lb)
Maximum Take-Off Weight (MTOW)	97 000 kg (213 848 lb)	101 000 kg (222 667 lb)
Maximum Landing Weight (MLW)	79 200 kg (174 606 lb)	79 200 kg (174 606 lb)
Maximum Zero Fuel Weight (MZFW)	75 600 kg (166 669 lb)	75 600 kg (166 669 lb)

****ON A/C A321-100 A321-200 A321neo A321neo-XLR**

5. The following table gives characteristics of A321-100, A321-200, A321NEO, A321NEO-ACF and A321NEO-XLR models, these data are common to each weight variant:

Aircraft Characteristics						
Standard Seating Capacity	185 (Single-Class) 202 (Single-Class) for A321NEO-ACF					
Usable Fuel Capacity (density = 0.785 kg/l)		A321CEO CFM Engine	A321CEO IAE Engine	A321NEO	A321NEO-ACF	A321NEO-XLR
	Total Wing Fuel	15 850 l (4 187 US gal)	15 500 l (4 095 US gal)	15 290 l (4 039 US gal)	15 380 l (4 063 US gal)	15 328 l (4 049 US gal)
	Center Tank Fuel	8 200 l (2 166 US gal)	8 200 l (2 166 US gal)	8 200 l (2 166 US gal)	8 200 l (2 166 US gal)	8 200 l (2 166 US gal)
	ACT1	X	X	X	3 121 l (824 US gal)	X
	ACT2	X	X	X	3 121 l (824 US gal)	X
	ACT4 / 4.1 / FWD	X	X	X	3 121 l (824 US gal)	3 120 l (824 US gal)
	RCT	X	X	X	X	13 100 l (3 461 US gal)

Aircraft Characteristics						
	Maximum Total Aircraft-Fuel	24 050 l (6 353 US gal)	23 700 l (6 261 US gal)	23 490 l (6 205 US gal)	32 943 l (8 703 US gal)	39 748 l (10 500 US gal)
Pressurized Fuselage Volume (A/C non equipped)	418 m^3 (14 762 ft^3)					
Passenger Compartment Volume	155 m^3 (5 474 ft^3)					
Cockpit Volume	9 m^3 (318 ft^3)					
Usable Volume, FWD CC	Basic Aircraft					22.81 m^3 (806 ft^3)
	With ACT 4.1					16.19 m^3 (572 ft^3)
Usable Volume, AFT CC	Basic Aircraft					23.03 m^3 (813 ft^3)
	With ACT 1					17.96 m^3 (634 ft^3)
	With ACTs 1 and 2					13.25 m^3 (468 ft^3)
Usable Volume, Bulk CC	5.88 m^3 (208 ft^3)					
Water Volume, FWD CC	25.42 m^3 (898 ft^3)					
Water Volume, AFT CC	25.69 m^3 (907 ft^3)					
Water Volume, Bulk CC	7.76 m^3 (274 ft^3)					

2-2-0 General Aircraft Dimensions

****ON A/C A321-100 A321-200 A321neo A321neo-XLR**

General Aircraft Dimensions

1. This section provides general aircraft dimensions.

****ON A/C A321-100 A321-200**

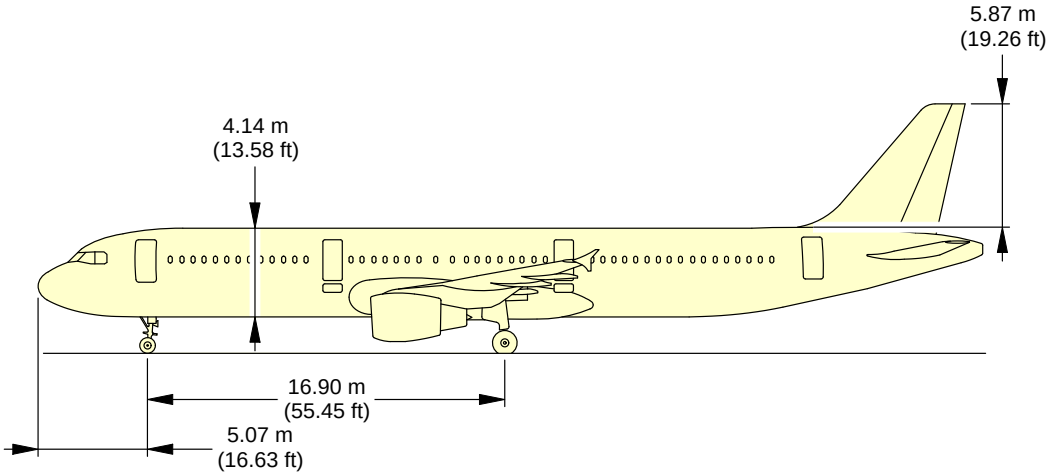

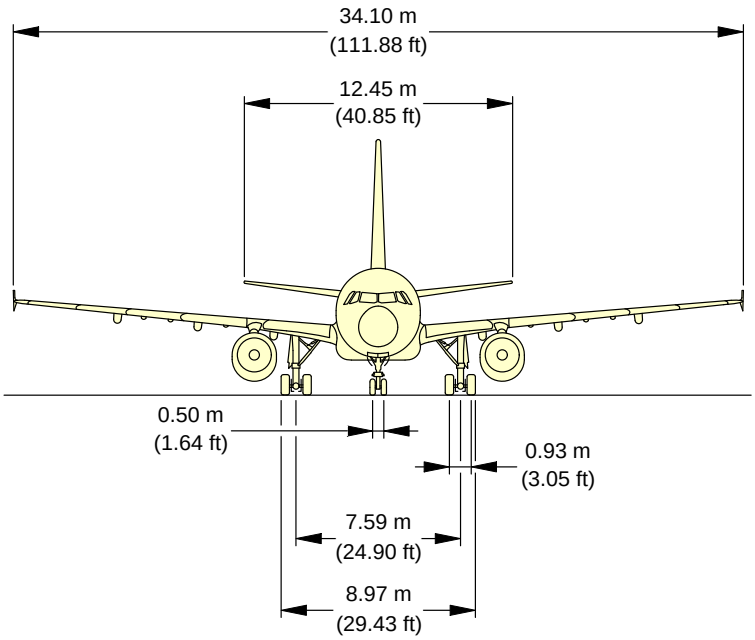

NOTE:
RELATED TO AIRCRAFT ATTITUDE AND WEIGHT.

N_AC_020200_1_0050101_01_04

General Aircraft Dimensions
Wing Tip Fence (Sheet 1 of 4)
FIGURE-2-2-0-991-005-A01

****ON A/C A321-100 A321-200**

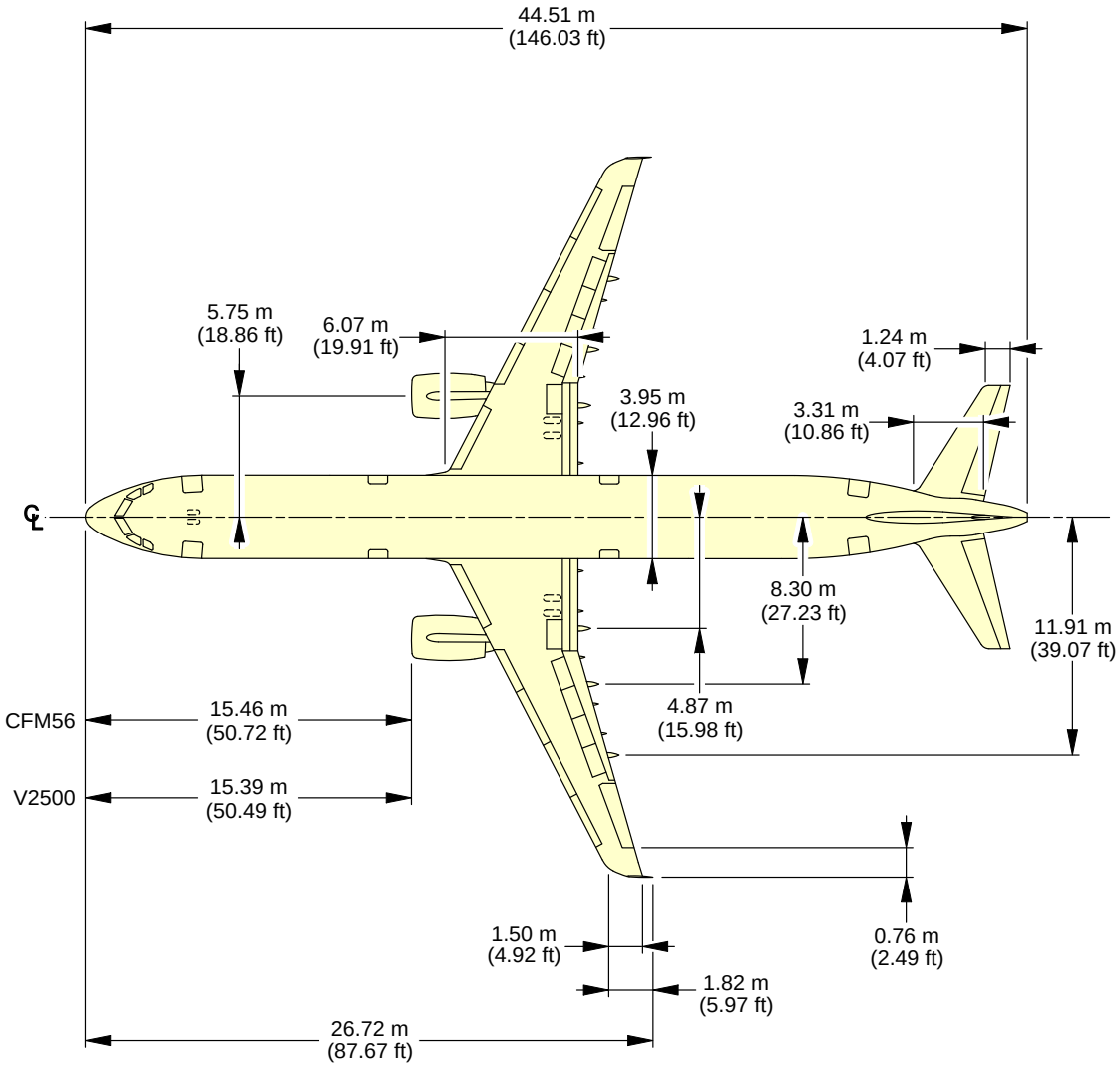

NOTE:
RELATED TO AIRCRAFT ATTITUDE AND WEIGHT.

N_AC_020200_1_0050104_01_02

General Aircraft Dimensions
Wing Tip Fence (Sheet 2 of 4)
FIGURE-2-2-0-991-005-A01

****ON A/C A321-100 A321-200**

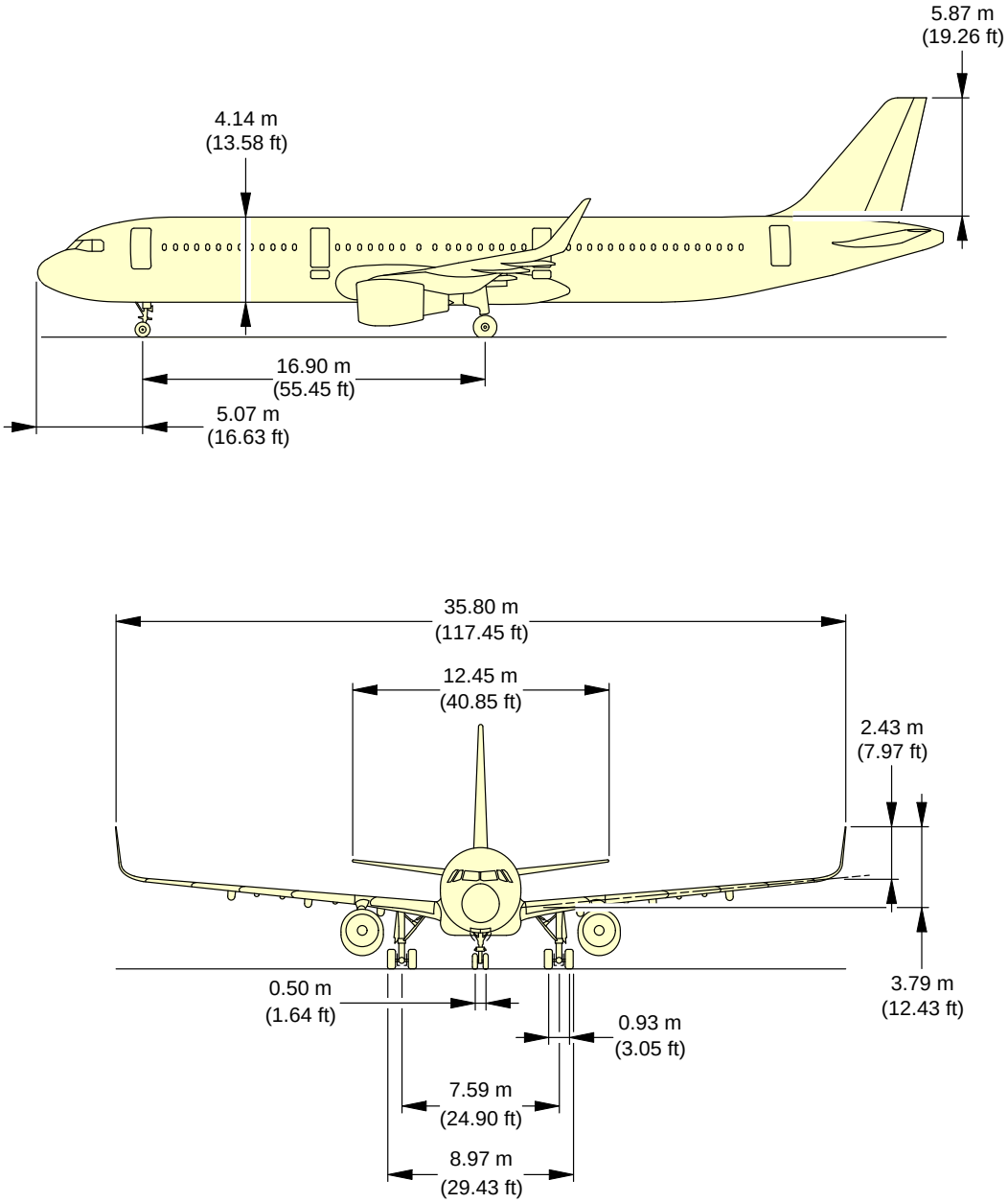

NOTE:
RELATED TO AIRCRAFT ATTITUDE AND WEIGHT.

N_AC_020200_1_0050103_01_02

General Aircraft Dimensions
Sharklet (Sheet 3 of 4)
FIGURE-2-2-0-991-005-A01

****ON A/C A321-100 A321-200**

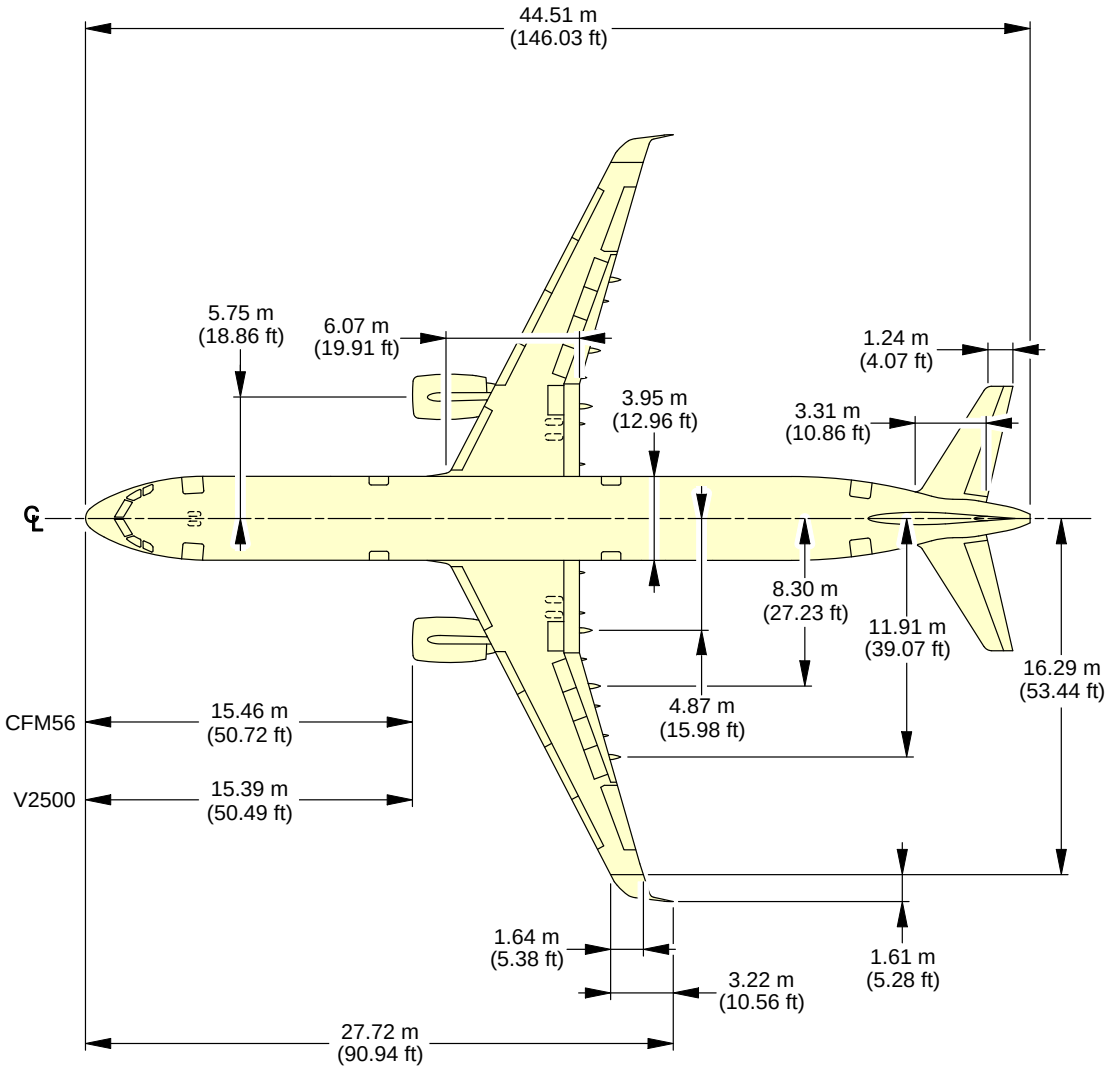

NOTE:
RELATED TO AIRCRAFT ATTITUDE AND WEIGHT.

N_AC_020200_1_0050105_01_02

General Aircraft Dimensions
Sharklet (Sheet 4 of 4)
FIGURE-2-2-0-991-005-A01

****ON A/C A321neo**

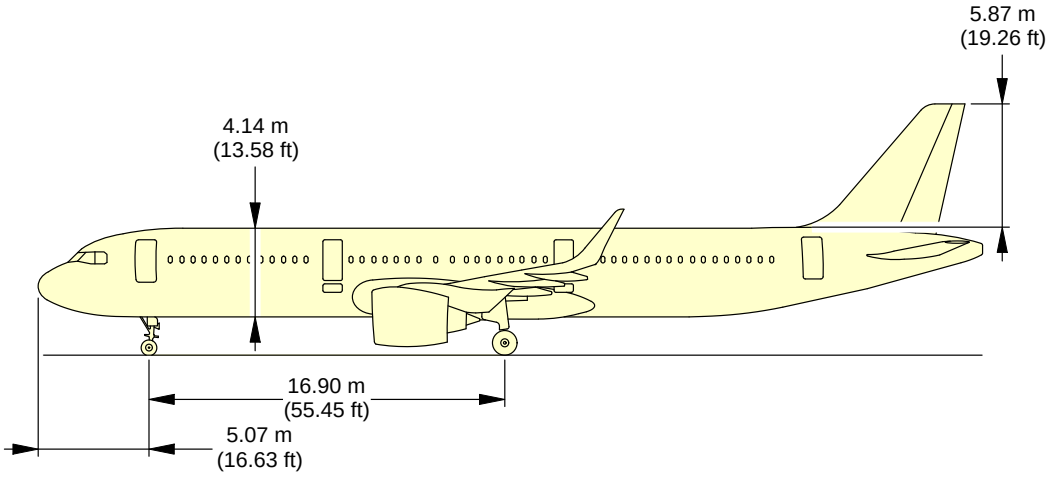

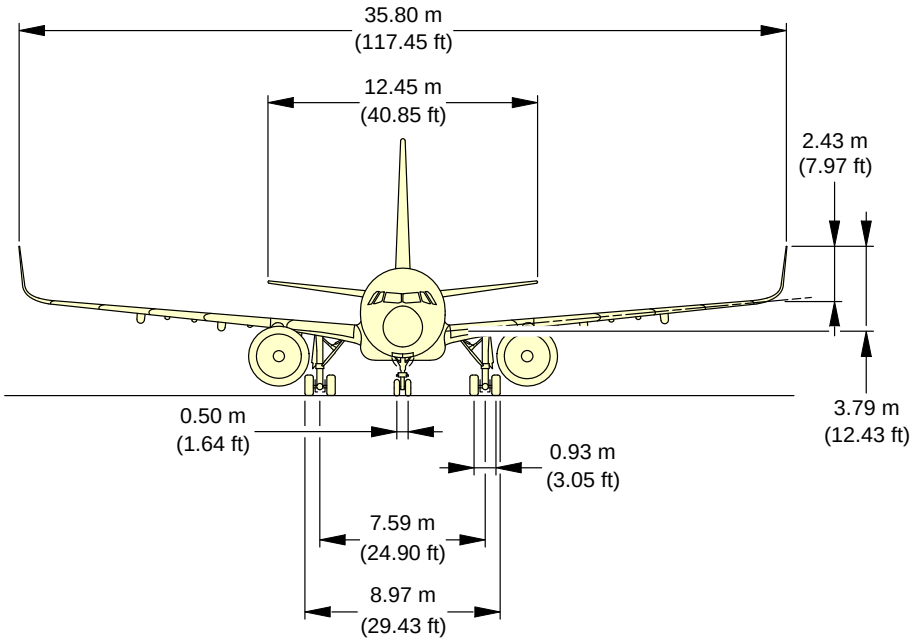

NOTE:
RELATED TO AIRCRAFT ATTITUDE AND WEIGHT.

N_AC_020200_1_0100101_01_01

General Aircraft Dimensions
(Sheet 1 of 2)
FIGURE-2-2-0-991-010-A01

****ON A/C A321neo**

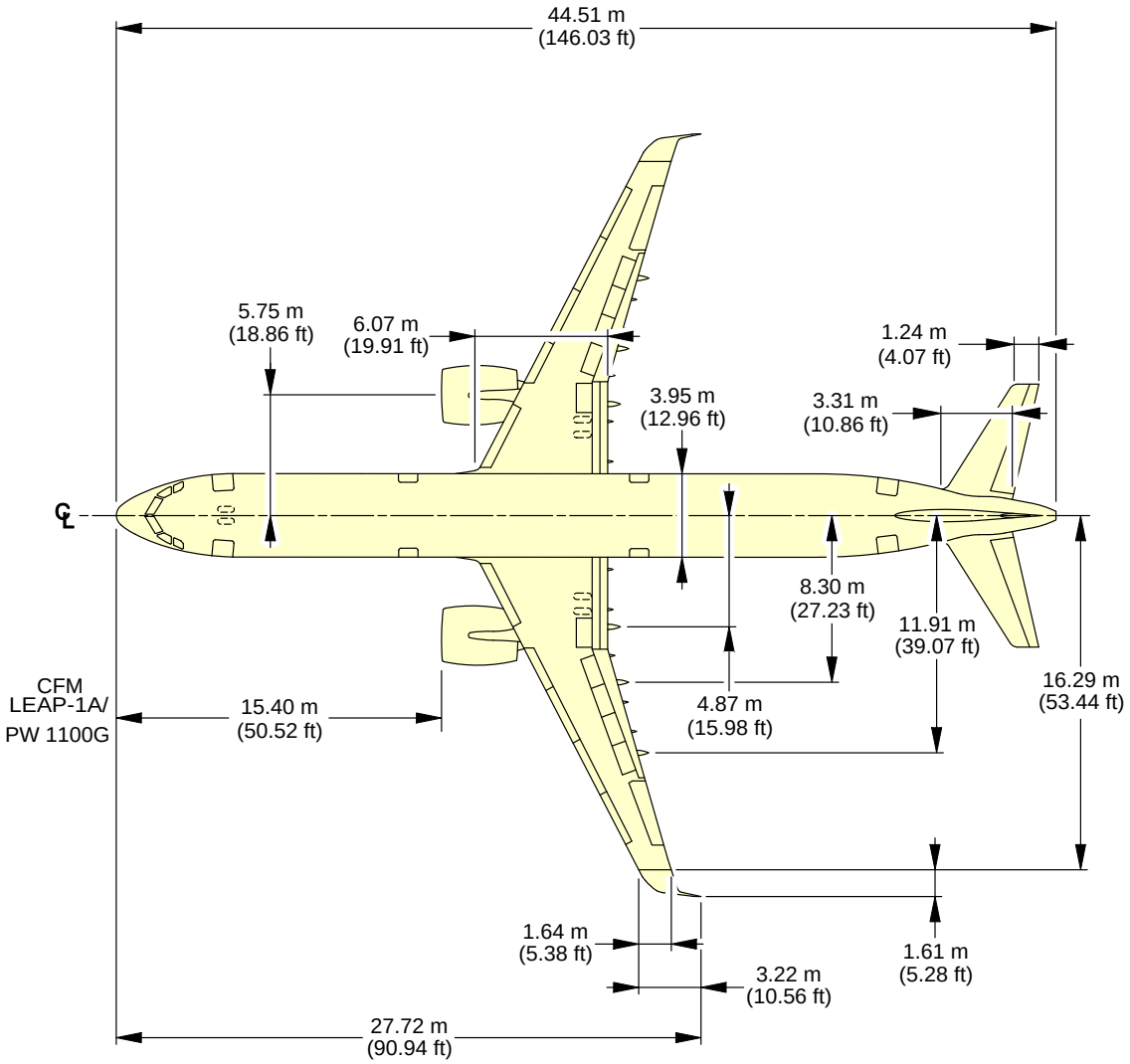

NOTE:
RELATED TO AIRCRAFT ATTITUDE AND WEIGHT.

N_AC_020200_1_0100102_01_01

General Aircraft Dimensions
(Sheet 2 of 2)
FIGURE-2-2-0-991-010-A01

**ON A/C A321neo-XLR

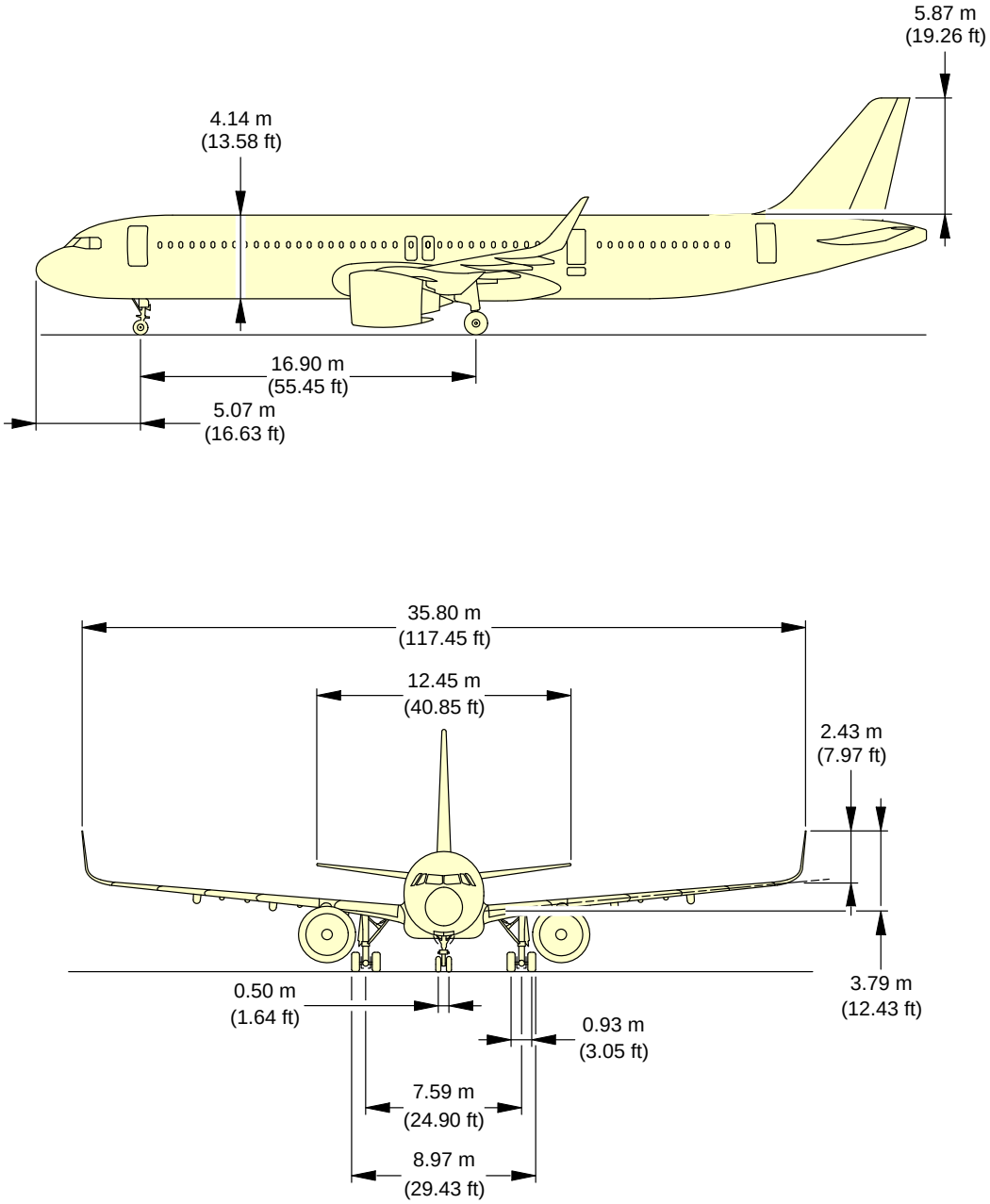

NOTE:
RELATED TO AIRCRAFT ATTITUDE AND WEIGHT.

N_AC_020200_1_0120101_01_00

General Aircraft Dimensions
(Sheet 1 of 2)
FIGURE-2-2-0-991-012-A01

**ON A/C A321neo-XLR

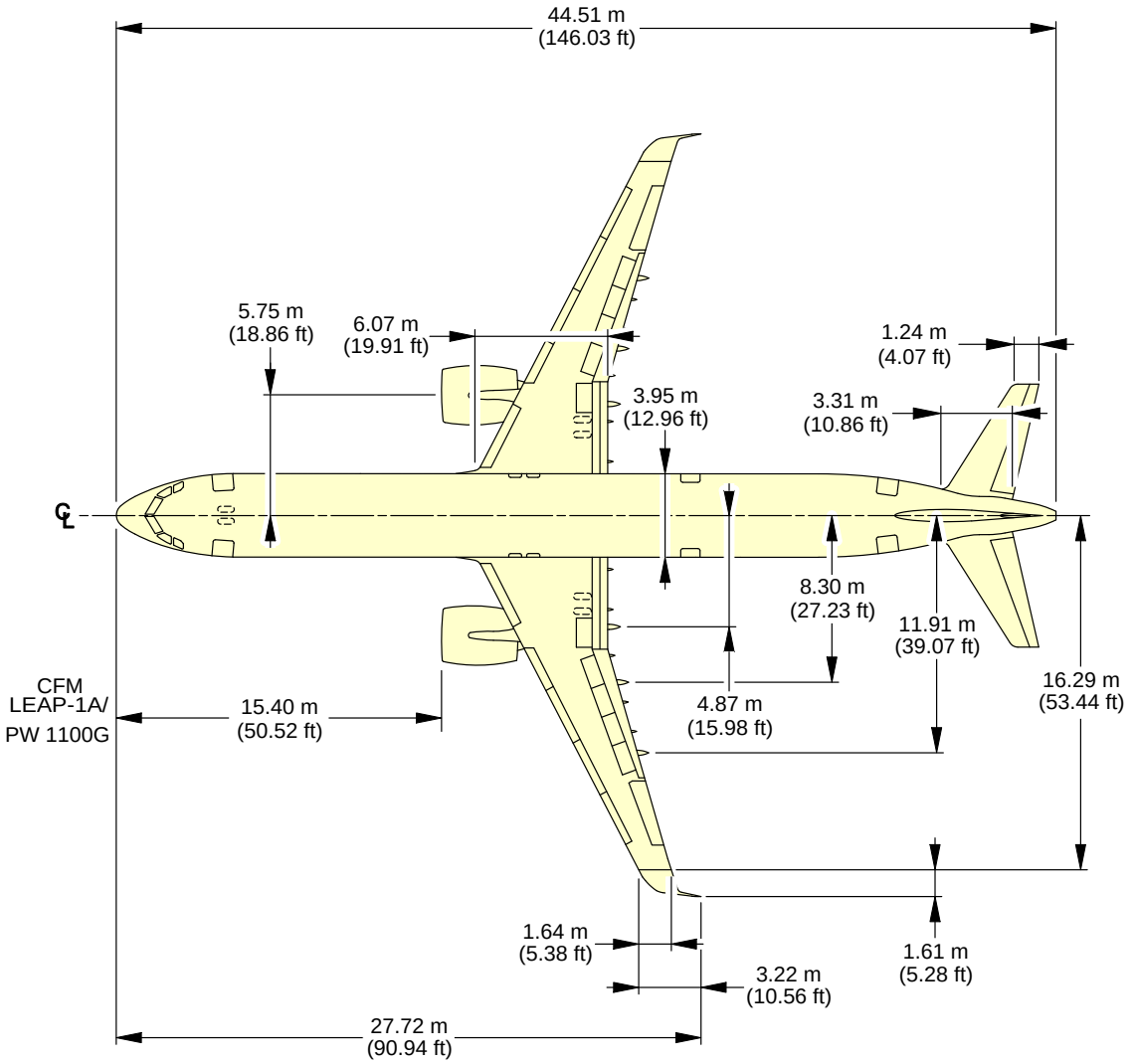

NOTE:
RELATED TO AIRCRAFT ATTITUDE AND WEIGHT.

N_AC_020200_1_0120102_01_00

General Aircraft Dimensions
(Sheet 2 of 2)
FIGURE-2-2-0-991-012-A01

2-3-0 Ground Clearances

****ON A/C A321-100 A321-200 A321neo A321neo-XLR**

Ground Clearances

1. This section provides the height of various points of the aircraft, above the ground, for different aircraft configurations.

   Dimensions in the tables are approximate and will vary with tire type, weight and balance and other special conditions.

   The dimensions are given for:
   - A light weight, for an A/C in maintenance configuration with a mid CG,
   - An aircraft at Maximum Ramp Weight with a FWD CG and an AFT CG,
   - Aircraft on jacks, FDL at 4.60 m (15.09 ft).

   NOTE : Passenger and cargo door ground clearances are measured from the center of the door sill and from floor level.

****ON A/C A321-100 A321-200**

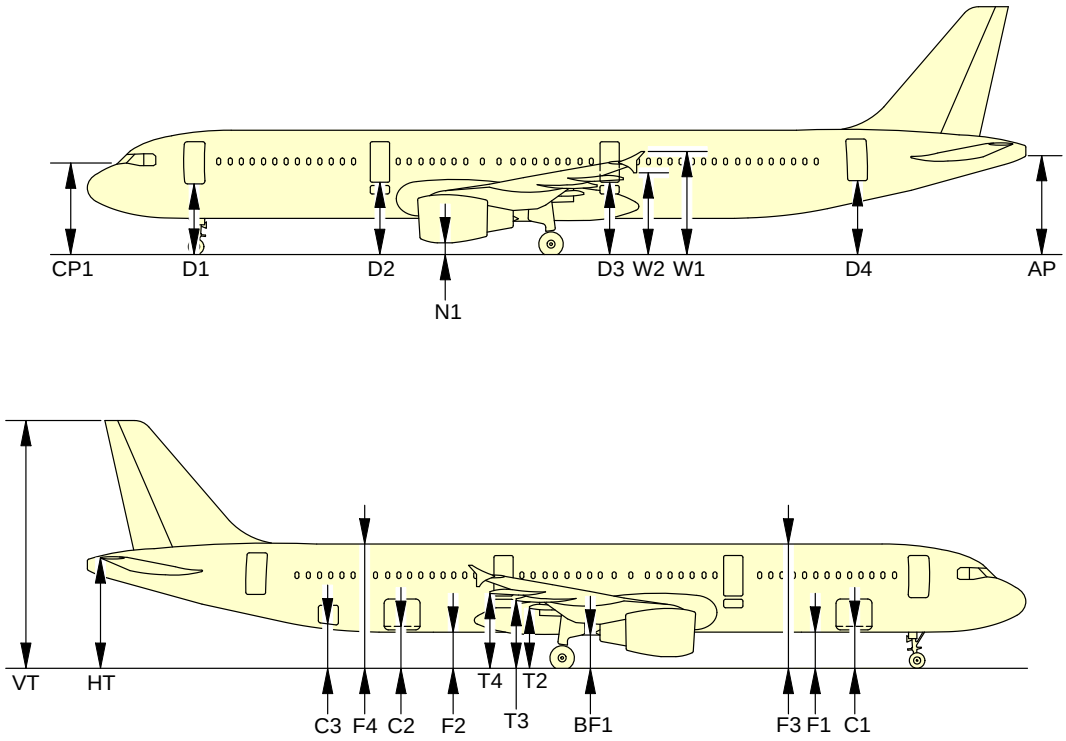

N_AC_020300_1_0050101_01_07

Ground Clearances
Wing Tip Fence (Sheet 1 of 3)
FIGURE-2-3-0-991-005-A01

****ON A/C A321-100 A321-200**

A/C CONFIGURATION			MRW (WV0) 89 400 kg (197 093 lb)				MRW (WV11) 93 900 kg (207 014 lb)				EMPTY WEIGHT FOR MAINTENANCE 51 000 kg (112 436 lb)		A/C JACKED FDL = 4.60 m (15.09 ft)	
			FORWARD CG (17.5%)		AFT CG (38%)		FORWARD CG (19%)		AFT CG (36.88%)		CG (25%)			
			m	ft	m	ft	m	ft	m	ft	m	ft	m	ft
PASSENGER DOORS	DOOR 1	D1	3.39	11.12	3.48	11.42	3.39	11.12	3.47	11.38	3.50	11.48	4.13	13.55
	EMERGENCY HATCH 1	D2	3.90	12.80	3.91	12.83	3.89	12.76	3.90	12.80	4.01	13.16	4.54	14.90
	EMERGENCY HATCH 2	D3	3.90	12.80	3.91	12.83	3.90	12.80	3.90	12.80	4.01	13.16	4.54	14.90
	DOOR 2	D4	3.63	11.91	3.53	11.58	3.61	11.84	3.53	11.58	3.74	12.27	4.13	13.55
CARGO DOORS	FORWARD CARGO DOOR	C1	1.82	5.97	1.89	6.20	1.81	5.94	1.87	6.14	1.93	6.33	2.53	8.30
	AFT CARGO DOOR	C2	1.98	6.50	1.92	6.30	1.96	6.43	1.91	6.27	2.08	6.82	2.53	8.30
	BULK CARGO DOOR	C3	2.22	7.28	2.14	7.02	2.20	7.22	2.14	7.02	2.33	7.64	2.75	9.02
REFERENCE POINT	PILOT VIEW	CP1	4.19	13.75	4.30	14.11	4.19	13.75	4.29	14.07	4.30	14.11	4.96	16.27
FUSELAGE	BOTTOM FORWARD	F1	1.73	5.68	1.79	5.87	1.73	5.68	1.78	5.84	1.84	6.04	2.43	7.97
	BOTTOM AFT	F2	1.88	6.17	1.82	5.97	1.87	6.14	1.82	5.97	1.99	6.53	2.43	7.97
	TOP FORWARD	F3	5.87	19.26	5.93	19.46	5.87	19.26	5.92	19.42	5.98	19.62	6.58	21.59
	TOP AFT	F4	6.03	19.78	5.97	19.59	6.01	19.72	5.96	19.55	6.13	20.11	6.58	21.59
	BELLY FAIRING	BF1	1.65	5.41	1.63	5.35	1.64	5.38	1.62	5.31	1.76	5.77	2.26	7.41
WING	FLAP TRACK 2	T2	2.64	8.66	2.63	8.63	2.63	8.63	2.62	8.60	2.75	9.02	3.25	10.66
	FLAP TRACK 3	T3	3.08	10.10	3.06	10.04	3.06	10.04	3.05	10.01	3.18	10.43	3.68	12.07
	FLAP TRACK 4	T4	3.41	11.19	3.39	11.12	3.40	11.15	3.38	11.09	3.52	11.55	4.01	13.16
	WING TIP FENCE TOP	W1	4.78	15.68	4.74	15.55	4.76	15.62	4.73	15.52	4.88	16.01	5.35	17.55
	WING TIP FENCE BOTTOM	W2	3.80	12.47	3.77	12.37	3.79	12.43	3.76	12.34	3.91	12.83	4.38	14.37

NOTE:
1 PASSENGER AND CARGO DOOR GROUND CLEARANCES ARE MEASURED FROM THE CENTER OF THE DOOR SILL AND FROM FLOOR LEVEL.

N_AC_020300_1_0050103_01_02

Ground Clearances
Wing Tip Fence (Sheet 2 of 3)
FIGURE-2-3-0-991-005-A01

****ON A/C A321-100 A321-200**

A/C CONFIGURATION			MRW (WV0) 89 400 kg (197 093 lb)				MRW (WV15) 93 900 kg (207 014 lb)				EMPTY WEIGHT FOR MAINTENANCE 51 000 kg (112 436 lb)		A/C JACKED FDL = 4.60 m (15.09 ft)	
			FORWARD CG (17.5%)		AFT CG (38%)		FORWARD CG (19%)		AFT CG (36.88%)		CG (25%)			
			m	ft	m	ft	m	ft	m	ft	m	ft	m	ft
TAILPLANE	HORIZONTAL TAIL PLANE	HT	5.47	17.95	5.34	17.52	5.45	17.88	5.34	17.52	5.58	18.31	5.93	19.46
	APU EXHAUST	AP	4.76	15.62	4.62	15.16	4.73	15.52	4.61	15.12	4.86	15.94	5.20	17.06
	VERTICAL TAIL PLANE	VT	11.99	39.34	11.86	38.91	11.97	39.27	11.85	38.88	12.10	39.70	12.45	40.85
ENGINE/ NACELLE	CFM 5A NACELLE LOW POINT	N1	0.60	1.97	0.61	2.00	0.59	1.94	0.60	1.97	0.71	2.33	1.24	4.07
	CFM 5B NACELLE LOW POINT	N1	0.60	1.97	0.61	2.00	0.59	1.94	0.60	1.97	0.71	2.33	1.24	4.07
	V2500 NACELLE LOW POINT	N1	0.78	2.56	0.79	2.59	0.77	2.53	0.78	2.56	0.89	2.92	1.42	4.66

N_AC_020300_1_0050104_01_00

Ground Clearances
Wing Tip Fence3 of 3)
2-3-0-991-005-A01

****ON A/C A321-100 A321-200**

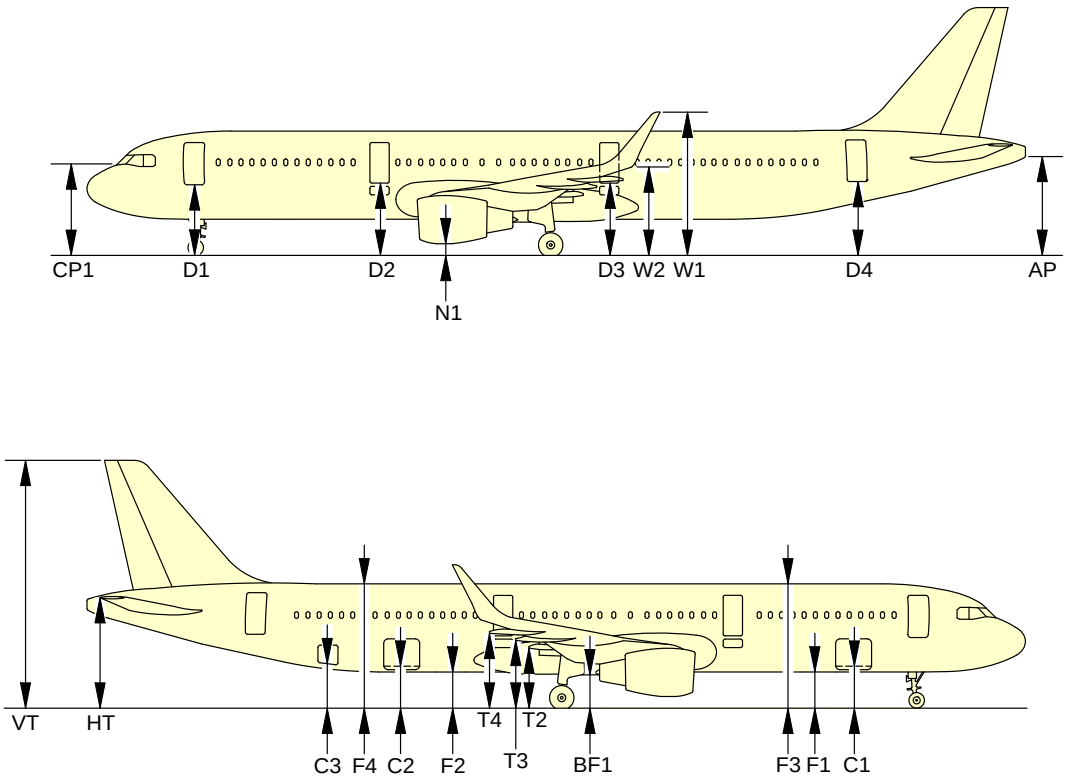

N_AC_020300_1_0300101_01_03

Ground Clearances
Sharklet (Sheet 1 of 2)
FIGURE-2-3-0-991-030-A01

****ON A/C A321-100 A321-200**

A/C CONFIGURATION			MRW (WV0) 89 400 kg (197 093 lb)				MRW (WV8) 93 900 kg (207 014 lb)				EMPTY WEIGHT FOR MAINTENANCE 51 000 kg (112 436 lb)		A/C JACKED FDL = 4.60 m (15.09 ft)	
			FORWARD CG (17.5%)		AFT CG (38%)		FORWARD CG (19%)		AFT CG (36.88%)		CG (25%)			
			m	ft	m	ft	m	ft	m	ft	m	ft	m	ft
PASSENGER DOORS	DOOR 1	D1	3.39	11.12	3.48	11.42	3.39	11.12	3.47	11.38	3.50	11.48	4.13	13.55
	EMERGENCY HATCH 1	D2	3.90	12.80	3.91	12.83	3.89	12.76	3.90	12.80	4.01	13.16	4.54	14.90
	EMERGENCY HATCH 2	D3	3.90	12.80	3.91	12.83	3.90	12.80	3.90	12.80	4.01	13.16	4.54	14.90
	DOOR 2	D4	3.63	11.91	3.53	11.58	3.61	11.84	3.53	11.58	3.74	12.27	4.13	13.55
CARGO DOORS	FORWARD CARGO DOOR	C1	1.82	5.97	1.89	6.20	1.81	5.94	1.87	6.14	1.93	6.33	2.53	8.30
	AFT CARGO DOOR	C2	1.98	6.50	1.92	6.30	1.96	6.43	1.91	6.27	2.08	6.82	2.53	8.30
	BULK CARGO DOOR	C3	2.22	7.28	2.14	7.02	2.20	7.22	2.14	7.02	2.33	7.64	2.75	9.02
REFERENCE POINT	PILOT VIEW	CP1	4.19	13.75	4.30	14.11	4.19	13.75	4.29	14.07	4.30	14.11	4.96	16.27
FUSELAGE	BOTTOM FORWARD	F1	1.73	5.68	1.79	5.87	1.73	5.68	1.78	5.84	1.84	6.04	2.43	7.97
	BOTTOM AFT	F2	1.88	6.17	1.82	5.97	1.87	6.14	1.82	5.97	1.99	6.53	2.43	7.97
	TOP FORWARD	F3	5.87	19.26	5.93	19.46	5.87	19.26	5.92	19.42	5.98	19.62	6.58	21.59
	TOP AFT	F4	6.03	19.78	5.97	19.59	6.01	19.72	5.96	19.55	6.13	20.11	6.58	21.59
	BELLY FAIRING	BF1	1.65	5.41	1.63	5.35	1.64	5.38	1.62	5.31	1.76	5.77	2.26	7.41
WING	FLAP TRACK 2	T2	2.64	8.66	2.63	8.63	2.63	8.63	2.62	8.60	2.75	9.02	3.25	10.66
	FLAP TRACK 3	T3	3.08	10.10	3.06	10.04	3.06	10.04	3.05	10.01	3.18	10.43	3.68	12.07
	FLAP TRACK 4	T4	3.41	11.19	3.39	11.12	3.40	11.15	3.38	11.09	3.52	11.55	4.01	13.16
	SHARKLET TOP	W1	6.72	22.05	6.68	21.92	6.70	21.98	6.67	21.88	6.82	22.38	7.29	23.92
	SHARKLET BOTTOM	W2	4.08	13.39	4.04	13.25	4.06	13.32	4.03	13.22	4.18	13.71	4.65	15.26
TAILPLANE	HORIZONTAL TAIL PLANE	HT	5.47	17.95	5.34	17.52	5.45	17.88	5.34	17.52	5.58	18.31	5.93	19.46
	APU EXHAUST	AP	4.76	15.62	4.62	15.16	4.73	15.52	4.61	15.12	4.87	15.98	5.20	17.06
	VERTICAL TAIL PLANE	VT	11.99	39.34	11.86	38.91	11.97	39.27	11.85	38.88	12.10	39.70	12.45	40.85
ENGINE/ NACELLE	CFM 5A NACELLE LOW POINT	N1	0.60	1.97	0.61	2.00	0.59	1.94	0.60	1.97	0.71	2.33	1.24	4.07
	CFM 5B NACELLE LOW POINT	N1	0.60	1.97	0.61	2.00	0.59	1.94	0.60	1.97	0.71	2.33	1.24	4.07
	V2500 NACELLE LOW POINT	N1	0.78	2.56	0.79	2.59	0.77	2.53	0.78	2.56	0.89	2.92	1.42	4.66

NOTE:
PASSENGER AND CARGO DOOR GROUND CLEARANCES ARE MEASURED FROM THE CENTER OF THE DOOR SILL AND FROM FLOOR LEVEL.

N_AC_020300_1_0300103_01_02

Ground Clearances
Sharklet (Sheet 2 of 2)
FIGURE-2-3-0-991-030-A01

****ON A/C A321neo**

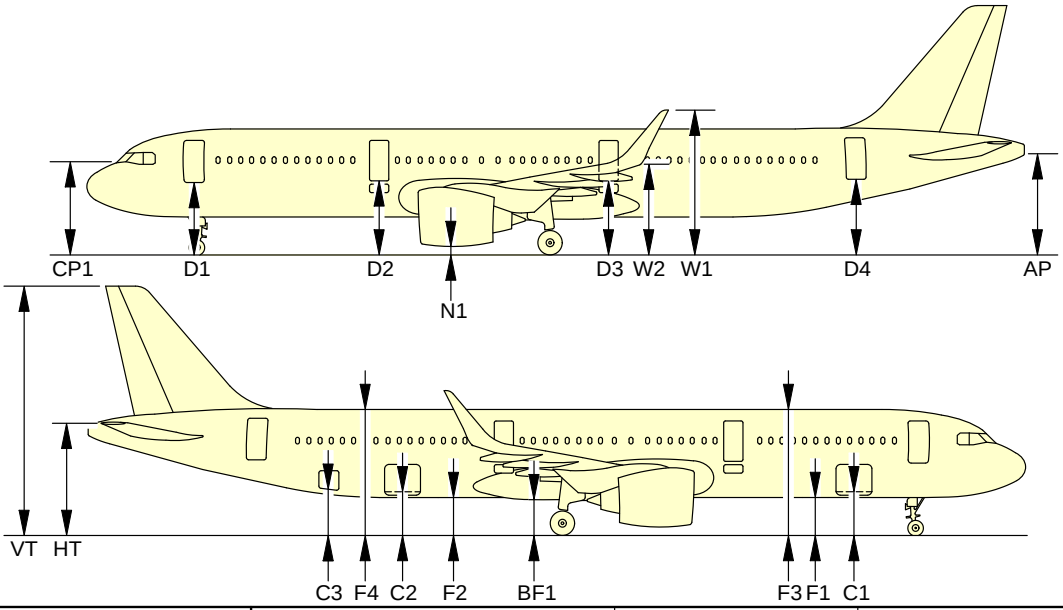

A/C CONFIGURATION		MRW				EMPTY WEIGHT FOR MAINTENANCE 52 500 kg (115 743 lb)		A/C JACKED FDL = 4.60 m (15.09 ft)	
		FORWARD CG (19%)		AFT CG (36.9%)		CG (25%)			
		m	ft	m	ft	m	ft	m	ft
DOORS	D1	3.39	11.12	3.47	11.38	3.50	11.48	4.13	13.55
	D2	3.45	11.32	3.48	11.42	3.57	11.71	4.13	13.55
	D3	3.89	12.76	3.90	12.80	4.01	13.16	4.54	14.89
	D4	3.61	11.84	3.53	11.58	3.73	12.24	4.13	13.55
	C1	1.99	6.53	2.05	6.73	2.10	6.89	2.71	8.89
	C2	2.14	7.02	2.09	6.86	2.26	7.41	2.71	8.89
	C3	2.20	7.22	2.14	7.02	2.33	7.64	2.75	9.02
FUSELAGE	F1	1.73	5.68	1.78	5.84	1.84	6.04	2.43	7.97
	F2	1.87	6.14	1.82	5.97	1.99	6.53	2.43	7.97
	F3	5.87	19.26	5.92	19.42	5.98	19.62	6.58	21.59
	F4	6.01	19.72	5.96	19.55	6.13	20.11	6.58	21.59
	BF1	1.64	5.38	1.62	5.31	1.76	5.77	2.26	7.41
	CP1	4.19	13.75	4.29	14.07	4.30	14.11	4.96	16.27
WINGS	W1	6.70	21.98	6.67	21.88	6.82	22.38	7.29	23.92
	W2	4.06	13.32	4.03	13.22	4.18	13.71	4.65	15.26
TAILPLANE	HT	5.45	17.88	5.34	17.52	5.58	18.31	5.93	19.46
	AP	4.73	15.52	4.61	15.12	4.86	15.94	5.20	17.06
	VT	11.97	39.27	11.85	38.88	12.10	39.70	12.45	40.85
ENGINE/ NACELLE	N1 (CFM LEAP-1A)	0.46	1.51	0.47	1.54	0.58	1.90	1.13	3.71
	N1 (PW 1100G)	0.46	1.51	0.47	1.54	0.58	1.90	1.13	3.71

NOTE:
PASSENGER AND CARGO DOOR GROUND CLEARANCES ARE MEASURED FROM THE CENTER OF THE DOOR SILL AND FROM FLOOR LEVEL.

N_AC_020300_1_0340101_01_02

Ground Clearances
FIGURE-2-3-0-991-034-A01

****ON A/C A321neo-XLR**

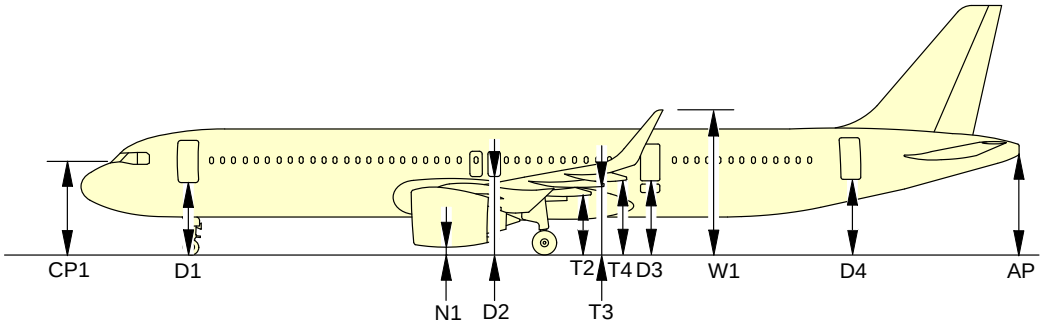

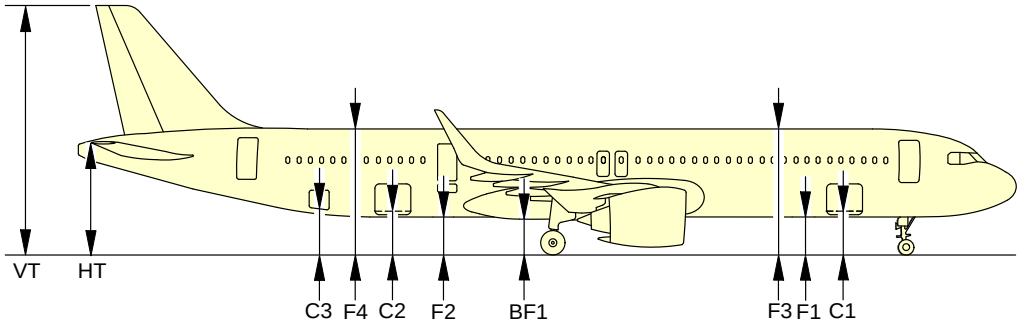

N_AC_020300_1_0490101_01_01

Ground Clearances
(Sheet 1 of 2)
FIGURE-2-3-0-991-049-A01

****ON A/C A321neo-XLR**

A/C CONFIGURATION			MRW (WV0) 101 400 kg (223 549 lb)				EMPTY WEIGHT FOR MAINTENANCE 54 500 kg (120 152 lb)				A/C JACKED FDL = 4.60 m (15.09 ft)	
			FORWARD CG (17.5%)		AFT CG (38%)		CG (25%)					
			m	ft	m	ft	m	ft	m	ft	m	ft
PASSENGER DOORS	DOOR 1	D1	3.38	11.09	3.46	11.35	3.49	11.45	4.13	13.55		
	EMERGENCY HATCH 2	D2	3.88	12.73	3.88	12.73	3.95	12.96	4.54	14.90		
	DOOR 2	D3	3.51	11.52	3.49	11.45	3.58	11.75	4.13	13.55		
	DOOR 3	D4	3.59	11.78	3.50	11.48	3.62	11.88	4.13	13.55		
CARGO DOORS	FORWARD CARGO DOOR	C1	1.80	5.91	1.87	6.14	1.90	6.23	2.53	8.30		
	AFT CARGO DOOR	C2	1.94	6.36	1.89	6.20	1.99	6.53	2.53	8.30		
	BULK CARGO DOOR	C3	2.18	7.15	2.11	6.92	2.23	7.32	2.75	9.02		
REFERENCE POINT	PILOT VIEW	CP1	4.18	13.71	4.29	14.07	4.30	14.11	4.96	16.27		
FUSELAGE	BOTTOM FORWARD	F1	1.71	5.61	1.77	5.81	1.81	5.94	2.43	7.97		
	BOTTOM AFT	F2	1.84	6.04	1.79	5.87	1.90	6.23	2.43	7.97		
	TOP FORWARD	F3	5.85	19.19	5.91	19.39	5.95	19.52	6.58	21.59		
	TOP AFT	F4	5.99	19.65	5.93	19.46	6.04	19.82	6.58	21.59		
	BELLY FAIRING	BF1	1.62	5.31	1.61	5.28	1.69	5.54	2.26	7.41		
WING	FLAP TRACK 2	T2	2.61	8.56	2.60	8.53	2.68	8.79	3.25	10.66		
	FLAP TRACK 3	T3	3.04	9.97	3.03	9.94	3.11	10.20	3.68	12.07		
	FLAP TRACK 4	T4	3.38	11.09	3.36	11.02	3.45	11.32	4.01	13.16		
	SHARKLET TOP	W1	6.72	22.05	6.68	21.92	6.78	22.24	7.32	24.02		
TAILPLANE	HORIZONTAL TAIL PLANE	HT	5.43	17.81	5.30	17.39	5.45	17.88	5.93	19.46		
	APU EXHAUST	AP	4.71	15.45	4.58	15.03	4.73	15.52	5.20	17.06		
	VERTICAL TAIL PLANE	VT	11.95	39.21	11.82	38.78	11.97	39.27	12.45	40.85		
ENGINE/ NACELLE	PW NACELLE FRONT LOW POINT	N1	0.65	2.13	0.68	2.23	0.74	2.43	1.34	4.40		
	PW 1100 NACELLE LOW POINT	N1	0.45	1.48	0.47	1.54	0.53	1.74	1.12	3.67		
	CFM NACELLE FRONT LOW POINT	N1	0.62	2.03	0.65	2.13	0.71	2.33	1.31	4.30		
	CFM LEAP NACELLE LOW POINT	N1	0.45	1.48	0.47	1.54	0.53	1.74	1.12	3.67		

NOTE:
PASSENGER AND CARGO DOOR GROUND CLEARANCES ARE MEASURED FROM THE CENTER OF THE DOOR SILL AND FROM FLOOR LEVEL.

N_AC_020300_1_0490102_01_02

Ground Clearances
(Sheet 2 of 2)
FIGURE-2-3-0-991-049-A01

****ON A/C A321neo-XLR**

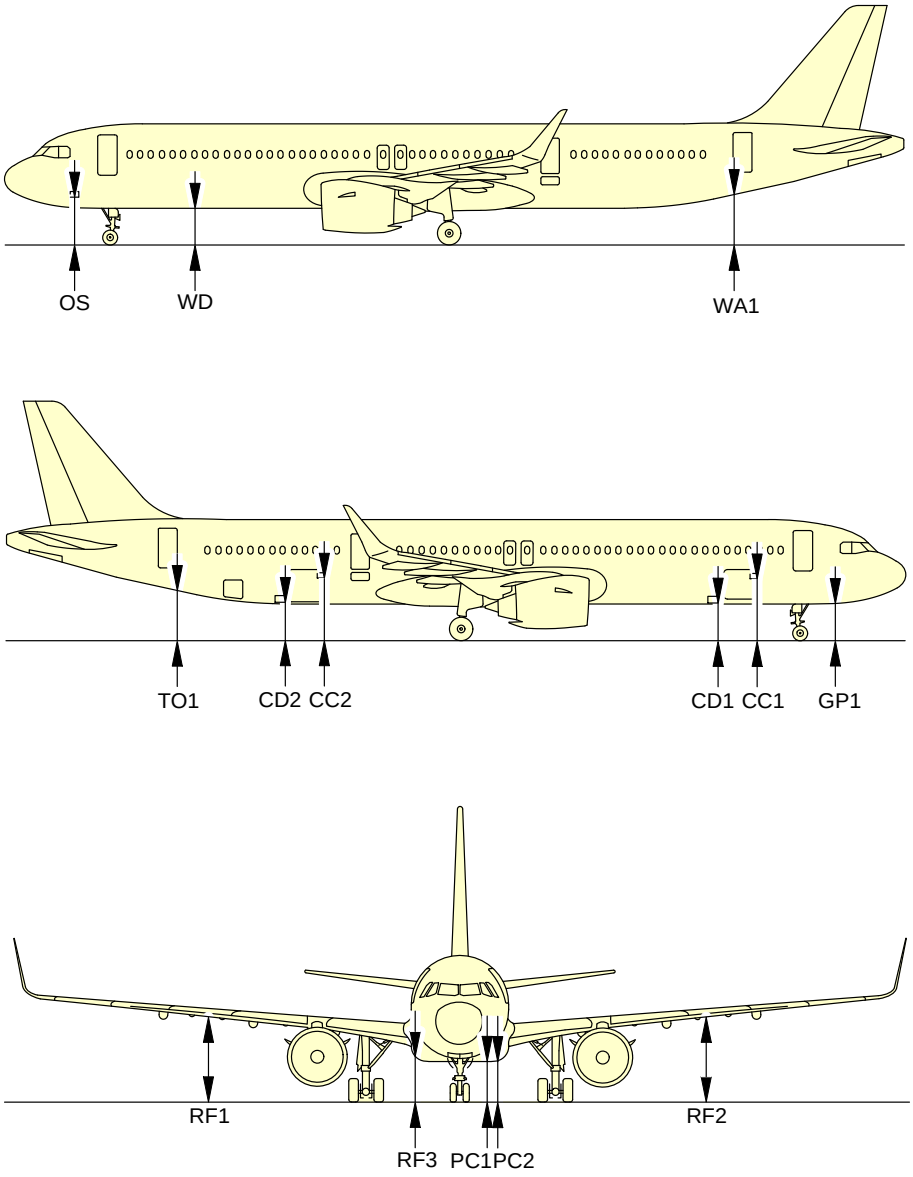

N_AC_020300_1_0500101_01_00

Ground Connections
(Sheet 1 of 2)
FIGURE-2-3-0-991-050-A01

****ON A/C A321neo-XLR**

CONNECTION HEIGHTS		MRW (WV0) 101 400 kg (223 549 lb)				EMPTY WEIGHT FOR MAINTENANCE 54 500 kg (120 152 lb)		A/C JACKED FDL = 4.60 m (15.09 ft)	
		FORWARD CG (17.5%)		AFT CG (38%)		CG (25%)			
		m	ft	m	ft	m	ft	m	ft
OXYGEN SYSTEMS	OS	2.19	7.19	2.28	7.48	2.30	7.55	2.95	9.68
PRE CONDITIONED AIR	PC1	1.67	5.48	1.68	5.51	1.75	5.74	2.34	7.68
	PC2	1.73	5.68	1.75	5.74	1.82	5.97	2.41	7.91
REFUEL COUPLING RH	RF1	3.51	11.52	3.50	11.48	3.58	11.75	4.15	13.62
REFUEL COUPLING LH - OPTIONAL	RF2	3.51	11.52	3.50	11.48	3.58	11.75	4.15	13.62
REFUEL PANEL	RF3	1.93	6.33	1.95	6.40	2.01	6.59	2.60	8.53
GROUND ELECTRICAL POWER RECEPTACLE	GP1	1.88	6.17	1.98	6.50	1.99	6.53	2.65	8.69
TOILET SERVICING	TO1	2.53	8.30	2.44	8.01	2.57	8.43	3.08	10.10
WATER FILLING	WA1	2.62	8.60	2.53	8.30	2.66	8.73	3.17	10.40
WATER DRAINAGE	WD	1.91	6.27	1.81	5.94	1.94	6.36	2.44	8.01
FORWARD CARGO DOOR CONTROL	CD1	1.81	5.94	1.88	6.17	1.92	6.30	2.55	8.37
FORWARD CLS CONTROL	CC1	1.72	5.64	1.78	5.84	1.82	5.97	2.44	8.01
AFT CARGO DOOR CONTROL	CD2	1.94	6.36	1.89	6.20	1.99	6.53	2.53	8.30
AFT CLS CONTROL	CC2	1.86	6.10	1.80	5.91	1.91	6.27	2.44	8.01

N_AC_020300_1_0500102_01_01

Ground Connections
(Sheet 2 of 2)
FIGURE-2-3-0-991-050-A01

**ON A/C A321-100 A321-200 A321neo A321neo-XLR

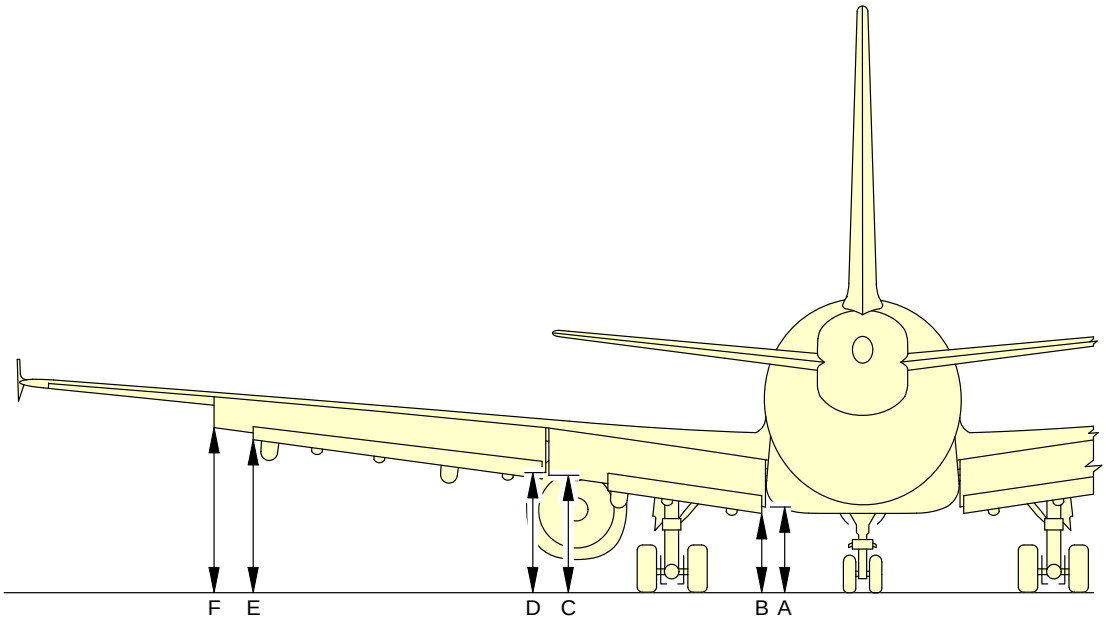

FLAPS EXTENDED							
DESCRIPTION		A/C IN MAINTENANCE CONFIGURATION MID CG		MAXIMUM RAMP WEIGHT FWD CG		MAXIMUM RAMP WEIGHT AFT CG	
		m	ft	m	ft	m	ft
FLAP 1 INBD	A	2.49	8.17	2.37	7.78	2.34	7.68
FLAP 1 TAB INBD	B	1.95	6.40	1.83	6.00	1.80	5.91
FLAP 1 OUTBD	C	2.71	8.89	2.60	8.53	2.57	8.43
FLAP 2 INBD	D	2.84	9.32	2.73	8.96	2.70	8.86
FLAP 2 TAB OUTBD	E	3.53	11.58	3.41	11.19	3.37	11.06
FLAP 2 OUTBD	F	3.74	12.27	3.62	11.88	3.58	11.75

N_AC_020300_1_0220101_01_01

Ground Clearances
Trailing Edge Flaps - Extended
FIGURE-2-3-0-991-022-A01

**ON A/C A321-100 A321-200 A321neo A321neo-XLR

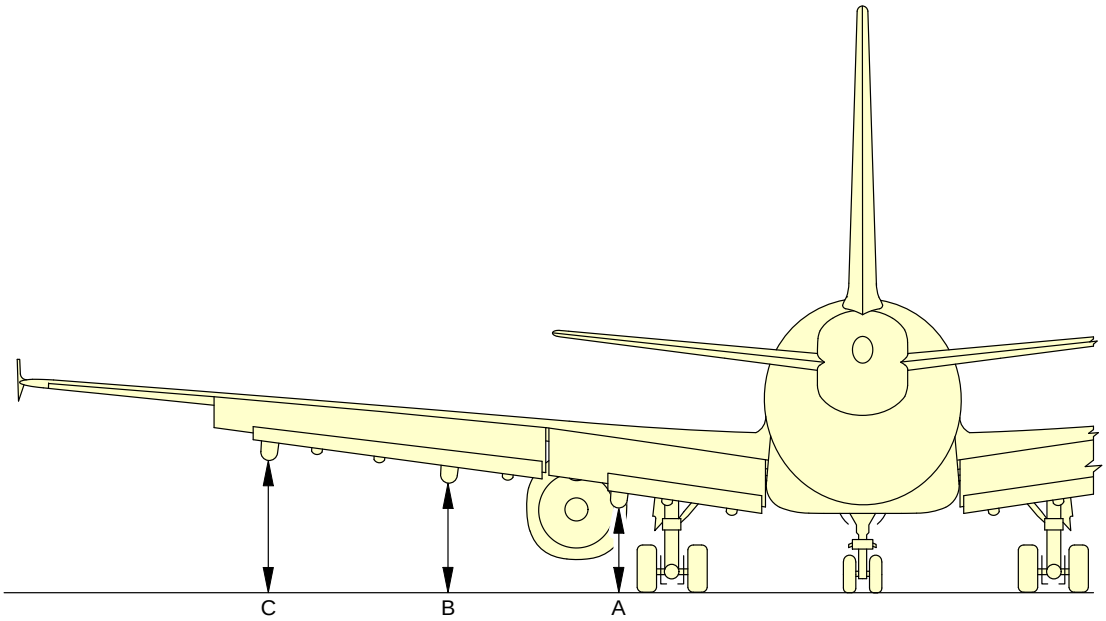

FLAP TRACKS EXTENDED							
DESCRIPTION		A/C IN MAINTENANCE CONFIGURATION MID CG		MAXIMUM RAMP WEIGHT FWD CG		MAXIMUM RAMP WEIGHT AFT CG	
		m	ft	m	ft	m	ft
FLAP TRACK 2	A	1.91	6.27	1.79	5.87	1.76	5.77
FLAP TRACK 3	B	2.31	7.58	2.19	7.19	2.15	7.05
FLAP TRACK 4	C	2.96	9.71	2.84	9.32	2.79	9.15

N_AC_020300_1_0450101_01_00

Ground Clearances
Flap Tracks - Extended
FIGURE-2-3-0-991-045-A01

**ON A/C A321-100 A321-200 A321neo A321neo-XLR

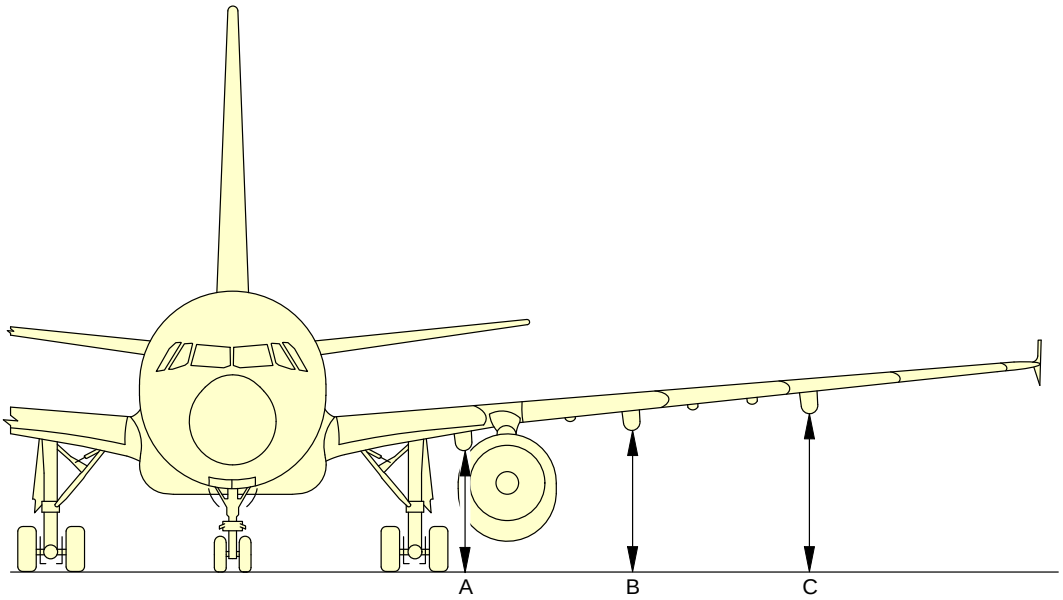

FLAP TRACKS RETRACTED							
DESCRIPTION		A/C IN MAINTENANCE CONFIGURATION MID CG		MAXIMUM RAMP WEIGHT FWD CG		MAXIMUM RAMP WEIGHT AFT CG	
		m	ft	m	ft	m	ft
FLAP TRACK 2	A	2.70	8.86	2.60	8.53	2.58	8.46
FLAP TRACK 3	B	3.10	10.17	3.00	9.84	2.97	9.74
FLAP TRACK 4	C	3.50	11.48	3.39	11.12	3.36	11.02

N_AC_020300_1_0230101_01_01

Ground Clearances
Flap Tracks - Retracted
FIGURE-2-3-0-991-023-A01

**ON A/C A321-100 A321-200 A321neo A321neo-XLR

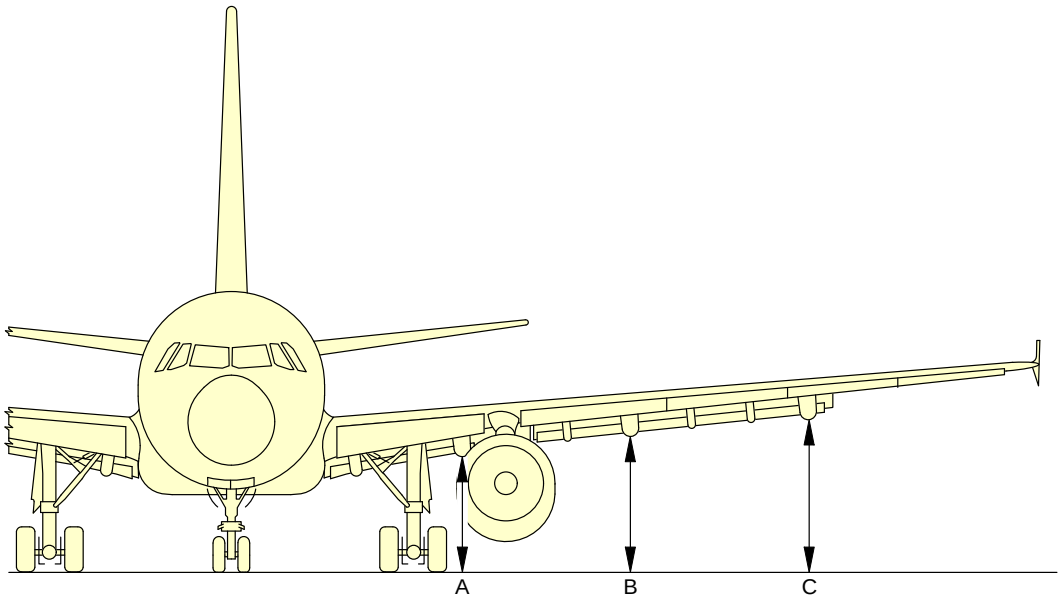

FLAP TRACKS 1+F							
DESCRIPTION		A/C IN MAINTENANCE CONFIGURATION MID CG		MAXIMUM RAMP WEIGHT FWD CG		MAXIMUM RAMP WEIGHT AFT CG	
		m	ft	m	ft	m	ft
FLAP TRACK 2	A	1.95	6.40	1.85	6.07	1.83	6.00
FLAP TRACK 3	B	2.31	7.58	2.21	7.25	2.18	7.15
FLAP TRACK 4	C	2.89	9.48	2.78	9.12	2.75	9.02

N_AC_020300_1_0460101_01_00

Ground Clearances
Flap Tracks - 1 + F
FIGURE-2-3-0-991-046-A01

**ON A/C A321-100 A321-200 A321neo A321neo-XLR

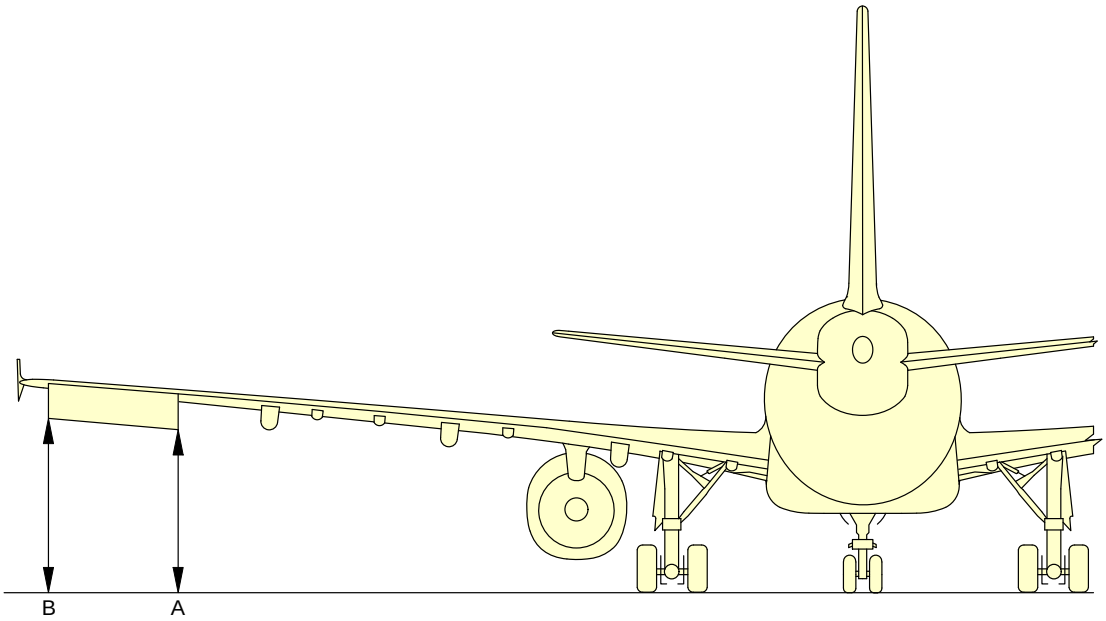

AILERON DOWN							
DESCRIPTION		A/C IN MAINTENANCE CONFIGURATION MID CG		MAXIMUM RAMP WEIGHT FWD CG		MAXIMUM RAMP WEIGHT AFT CG	
		m	ft	m	ft	m	ft
AILERON INBD	A	3.81	12.50	3.70	12.14	3.67	12.04
AILERON OUTBD	B	4.15	13.62	4.03	13.22	4.00	13.12

N_AC_020300_1_0240101_01_01

Ground Clearances
Aileron Down
FIGURE-2-3-0-991-024-A01

**ON A/C A321-100 A321-200 A321neo A321neo-XLR

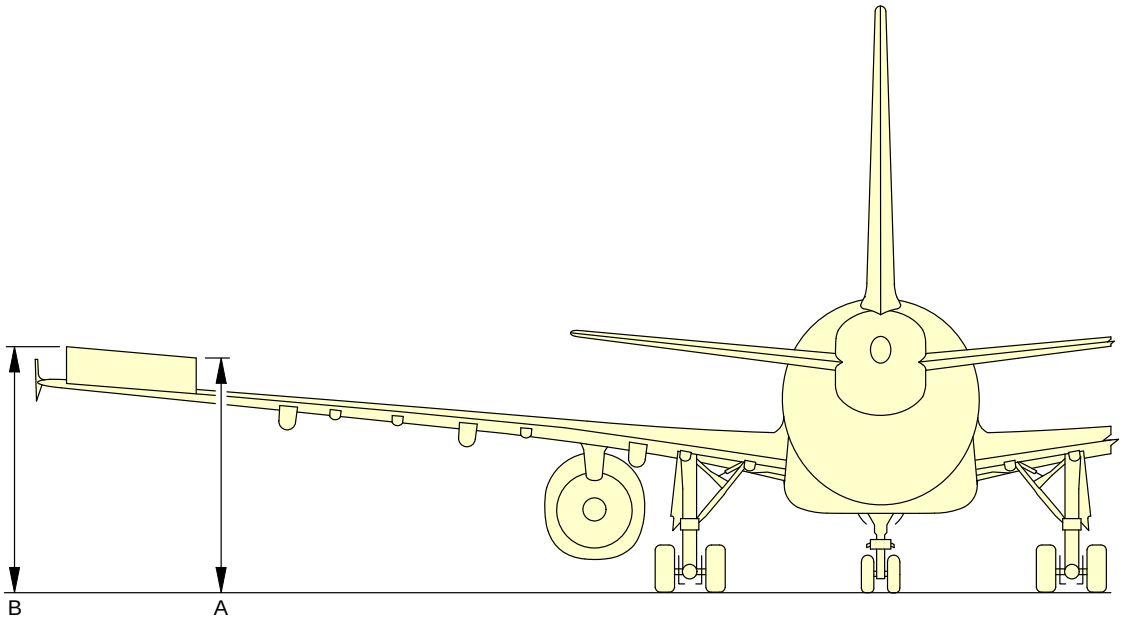

AILERON UP							
DESCRIPTION		A/C IN MAINTENANCE CONFIGURATION MID CG		MAXIMUM RAMP WEIGHT FWD CG		MAXIMUM RAMP WEIGHT AFT CG	
		m	ft	m	ft	m	ft
AILERON INBD	A	4.33	14.21	4.22	13.85	4.19	13.75
AILERON OUTBD	B	4.53	14.86	4.42	14.50	4.37	14.34

N_AC_020300_1_0470101_01_00

Ground Clearances
Aileron Up
FIGURE-2-3-0-991-047-A01

**ON A/C A321-100 A321-200 A321neo A321neo-XLR

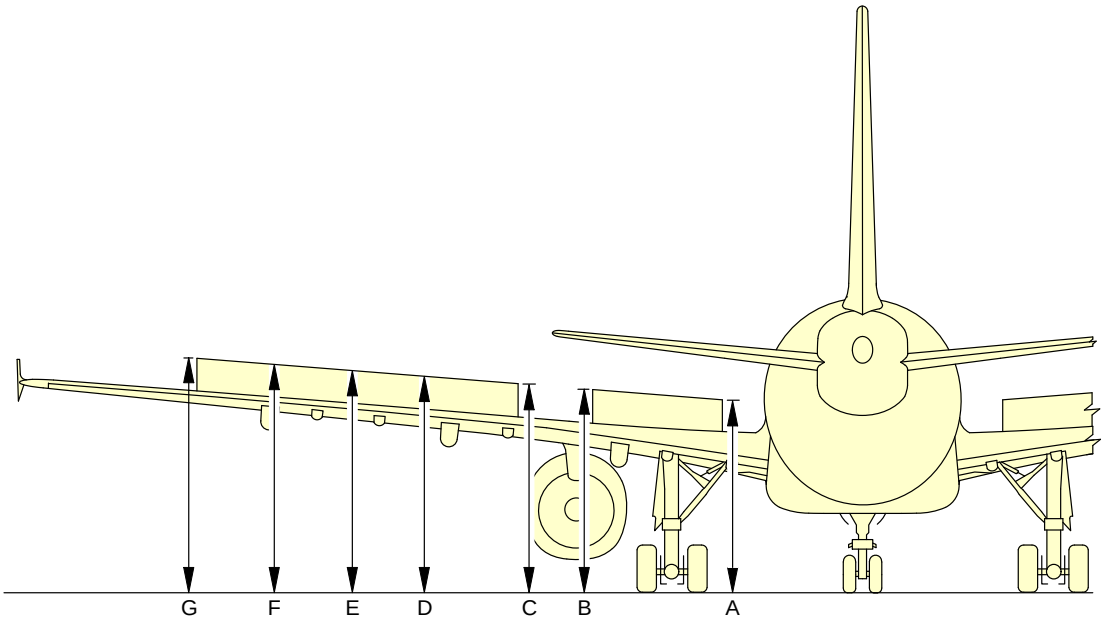

SPOILERS EXTENDED							
DESCRIPTION		A/C IN MAINTENANCE CONFIGURATION MID CG		MAXIMUM RAMP WEIGHT FWD CG		MAXIMUM RAMP WEIGHT AFT CG	
		m	ft	m	ft	m	ft
SPOILER 1 INBD	A	3.74	12.27	3.63	11.91	3.61	11.84
SPOILER 1 OUTBD	B	4.04	13.25	3.94	12.93	3.92	12.86
SPOILER 2 INBD	C	4.08	13.39	3.97	13.02	3.95	12.96
SPOILER 2/3	D	4.20	13.78	4.10	13.45	4.07	13.35
SPOILER 3/4	E	4.34	14.24	4.23	13.88	4.20	13.78
SPOILER 4/5	F	4.46	14.63	4.35	14.27	4.32	14.17
SPOILER 5 OUTBD	G	4.59	15.06	4.48	14.70	4.45	14.60

N_AC_020300_1_0250101_01_01

Ground Clearances
Spoilers - Extended
FIGURE-2-3-0-991-025-A01

**ON A/C A321-100 A321-200 A321neo A321neo-XLR

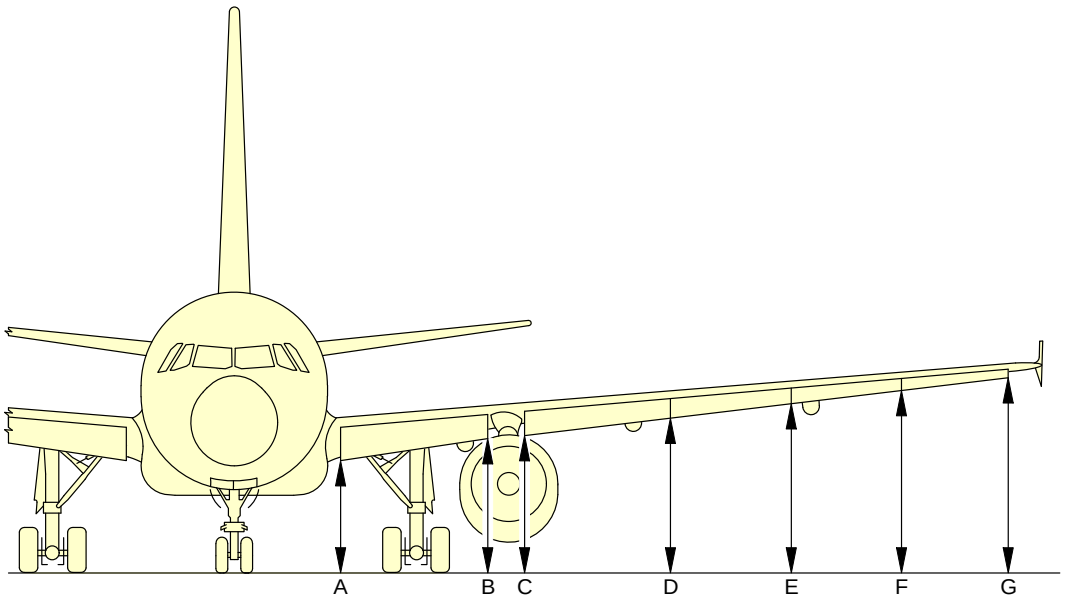

LEADING EDGE SLATS EXTENDED							
DESCRIPTION		A/C IN MAINTENANCE CONFIGURATION MID CG		MAXIMUM RAMP WEIGHT FWD CG		MAXIMUM RAMP WEIGHT AFT CG	
		m	ft	m	ft	m	ft
SLAT 1 INBD	A	2.58	8.46	2.47	8.10	2.50	8.20
SLAT 1 OUTBD	B	2.98	9.78	2.88	9.45	2.89	9.48
SLAT 2 INBD	C	3.07	10.07	2.96	9.71	2.97	9.74
SLAT 2/3	D	3.36	11.02	3.25	10.66	3.25	10.66
SLAT 3/4	E	3.61	11.84	3.50	11.48	3.49	11.45
SLAT 4/5	F	3.85	12.63	3.74	12.27	3.72	12.20
SLAT 5 OUTBD	G	4.08	13.39	3.96	12.99	3.94	12.93

N_AC_020300_1_0260101_01_01

Ground Clearances
Leading Edge Slats - Extended
FIGURE-2-3-0-991-026-A01

2-4-1 Interior Arrangements - Plan View

****ON A/C A321-100 A321-200 A321neo A321neo-XLR**

Interior Arrangements - Plan View

1. This section gives the typical interior configuration.

**ON A/C A321-100 A321-200 A321neo

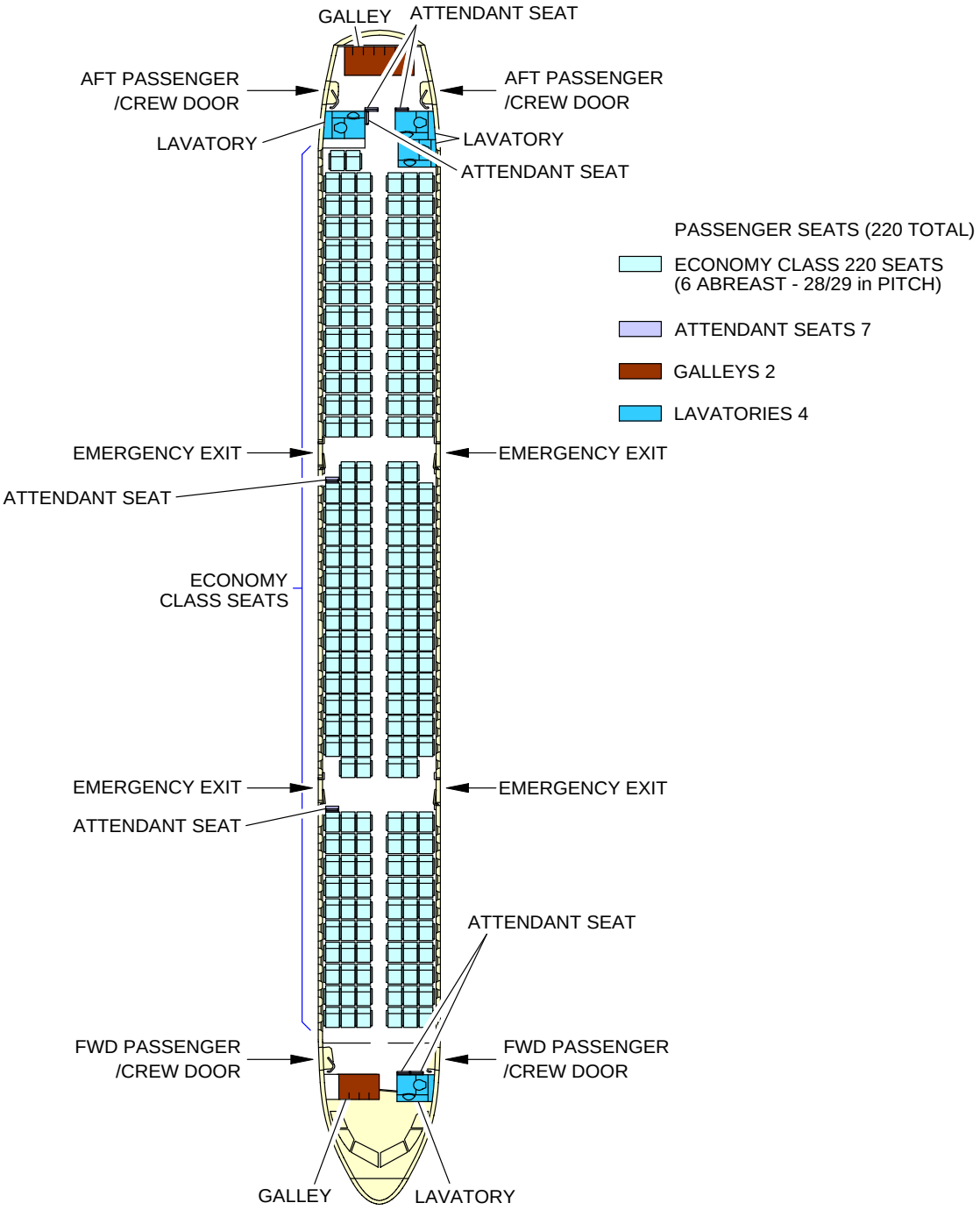

Interior Arrangements - Plan View
Typical Configuration - Single-Class, High Density
FIGURE-2-4-1-991-004-A01

****ON A/C A321-100 A321-200 A321neo**

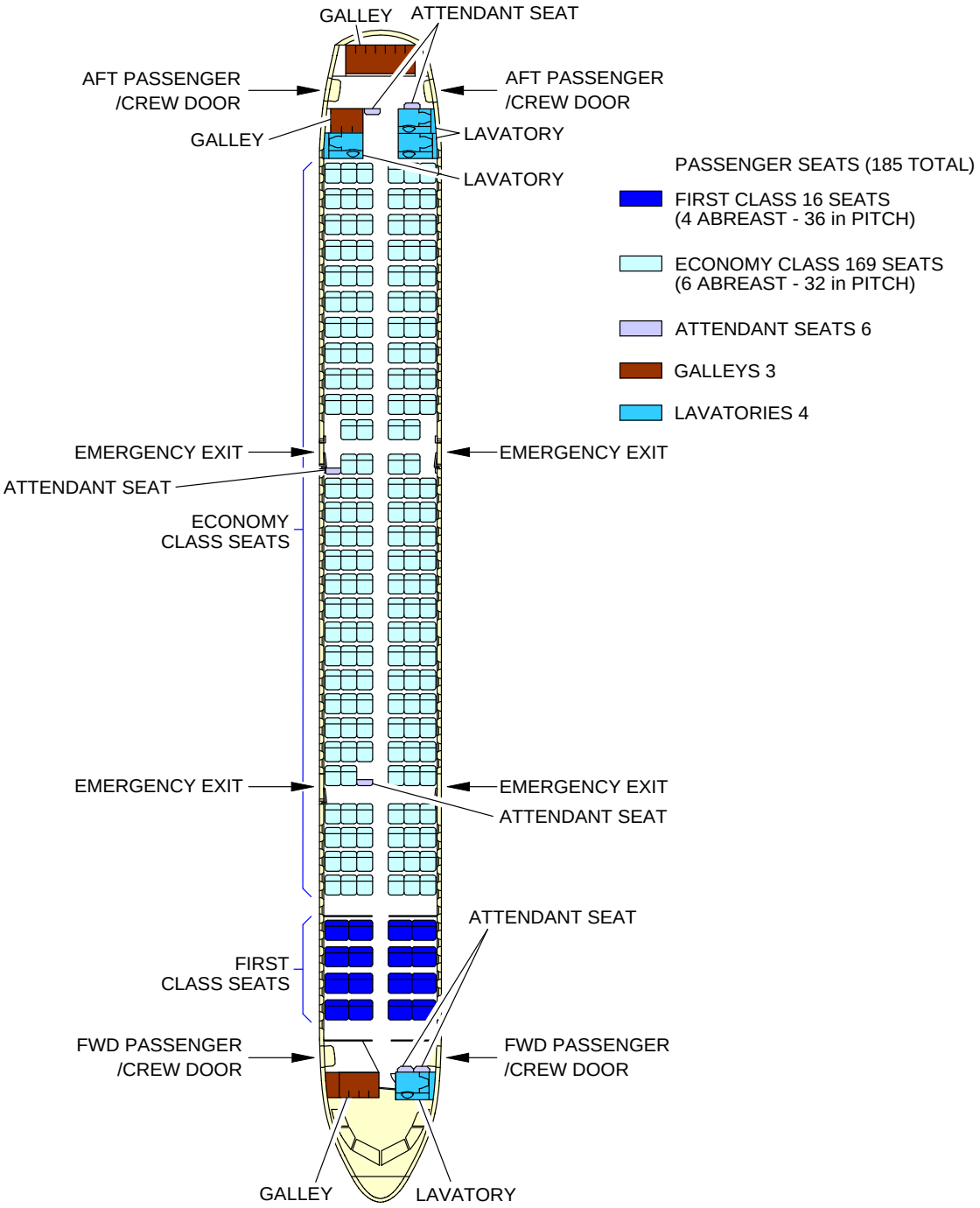

Interior Arrangements - Plan View
Typical Configuration - Two-Class
FIGURE-2-4-1-991-006-A01

**ON A/C A321neo-XLR

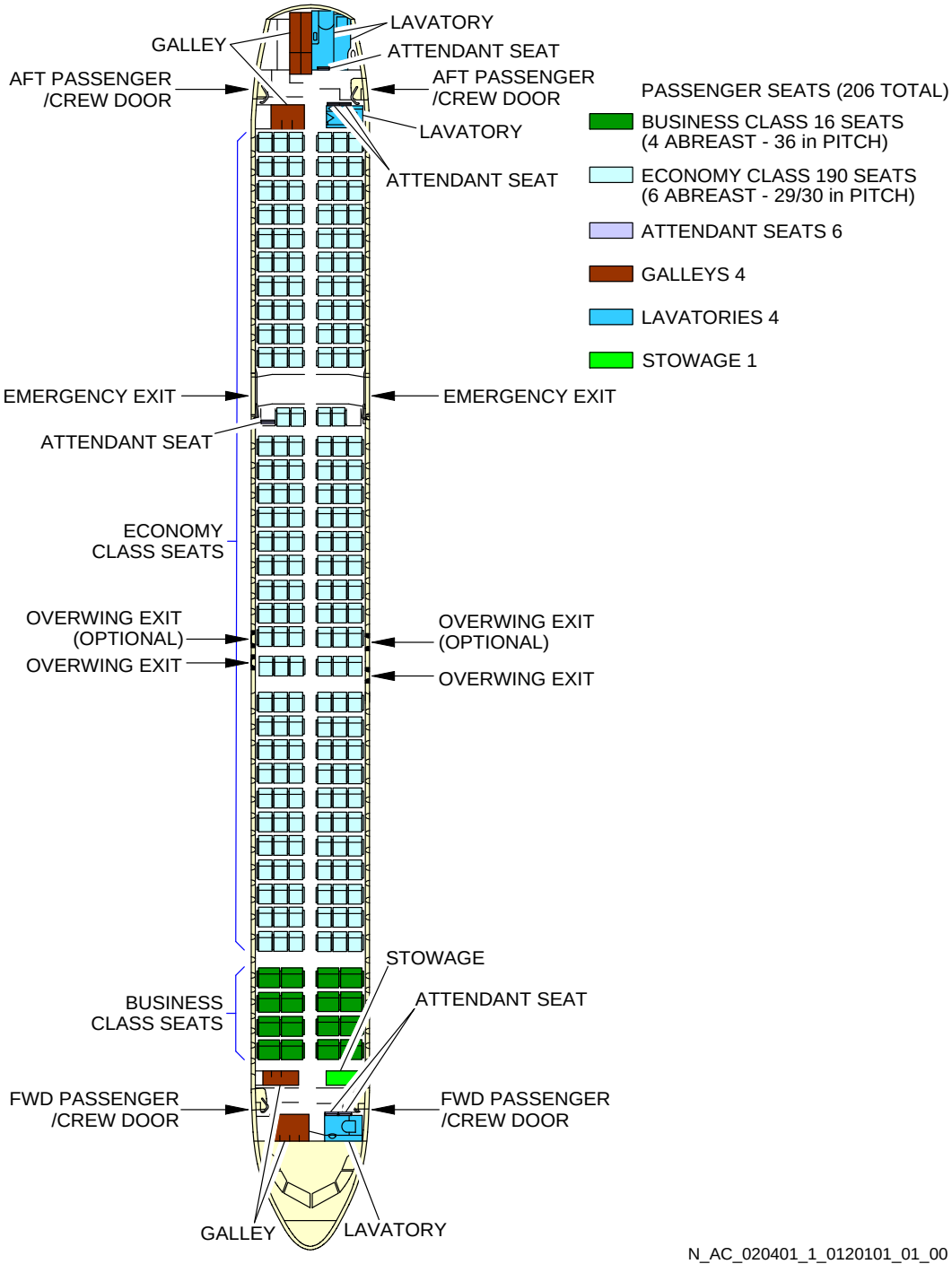

Interior Arrangements - Plan View
Typical Configuration - Two-Class
FIGURE-2-4-1-991-012-A01

2-5-0 Interior Arrangements - Cross Section

****ON A/C A321-100 A321-200 A321neo A321neo-XLR**

Interior Arrangements - Cross Section

1. This section provides the typical configuration.

**ON A/C A321-100 A321-200 A321neo A321neo-XLR

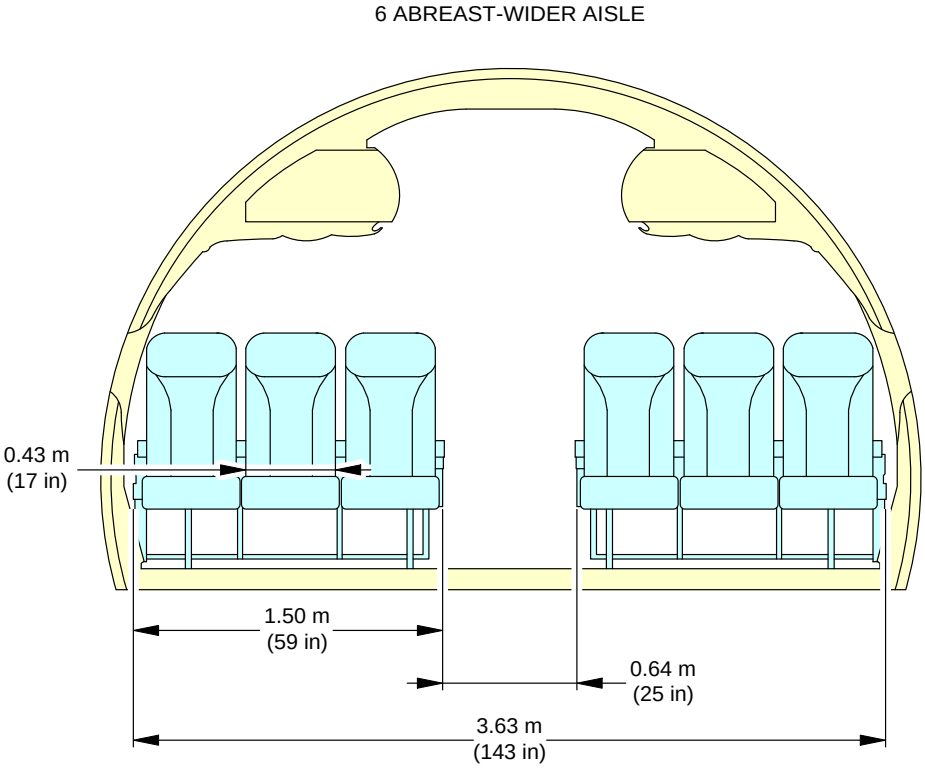

N_AC_020500_1_0050101_01_01

Interior Arrangements - Cross Section
Economy Class, 6 Abreast - Wider Aisle (Sheet 1 of 2)
FIGURE-2-5-0-991-005-A01

**ON A/C A321-100 A321-200 A321neo A321neo-XLR

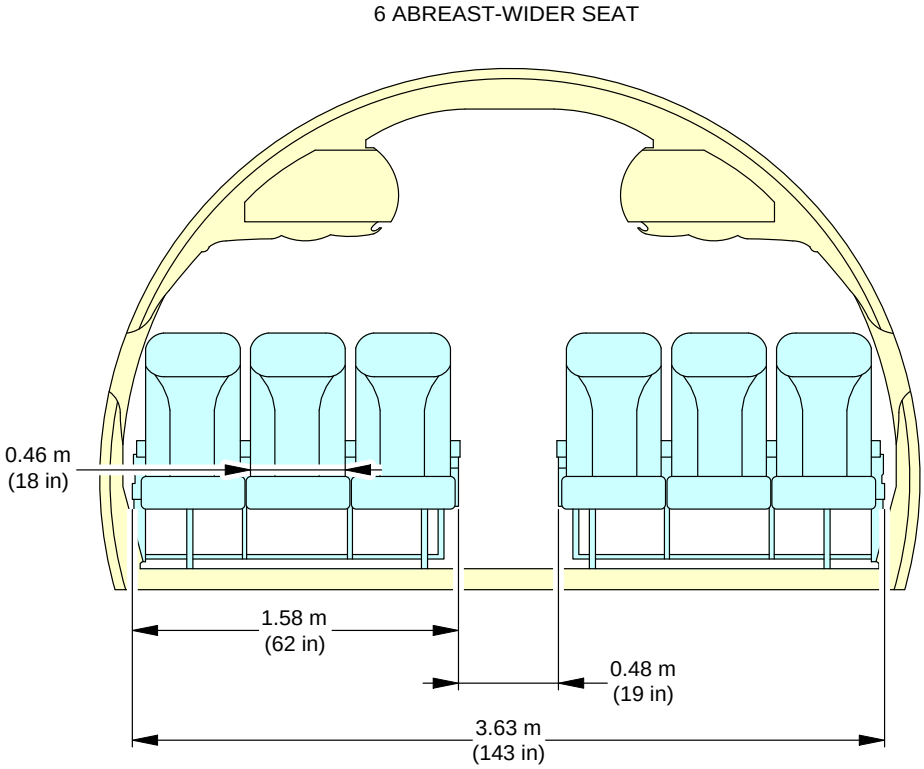

N_AC_020500_1_0050102_01_03

Interior Arrangements - Cross Section
Economy Class, 6 Abreast - Wider Seat (Sheet 2 of 2)
FIGURE-2-5-0-991-005-A01

**ON A/C A321-100 A321-200 A321neo A321neo-XLR

4 ABREAST-FIRST CLASS

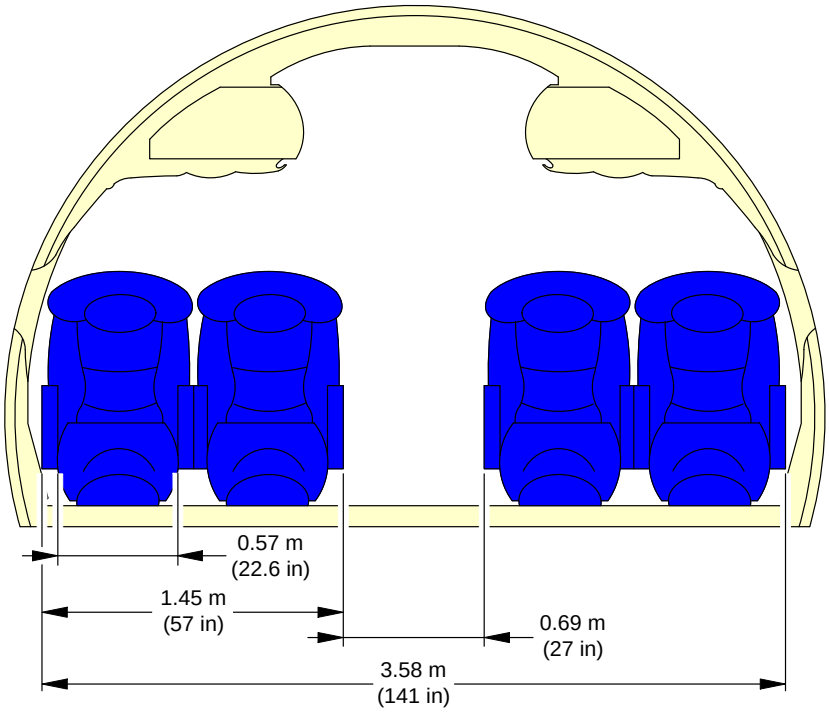

N_AC_020500_1_0060101_01_01

Interior Arrangements - Cross Section
First-Class
FIGURE-2-5-0-991-006-A01

2-6-0 Cargo Compartments

****ON A/C A321-100 A321-200 A321neo A321neo-XLR**

Cargo Compartments

1. This section gives the cargo compartments locations, dimensions and loading combinations.

****ON A/C A321-100 A321-200 A321neo**

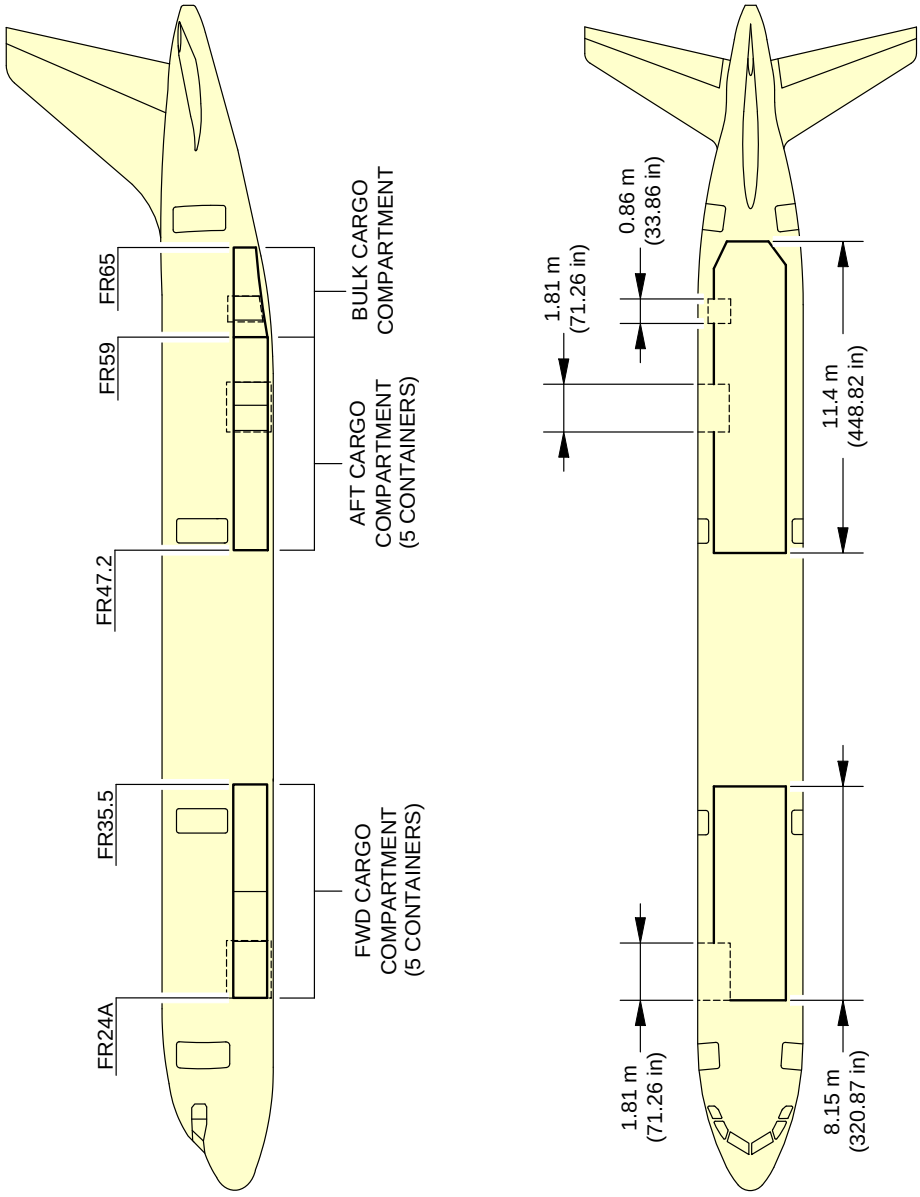

N_AC_020600_1_0040101_01_02

Cargo Compartments
Locations and Dimensions
FIGURE-2-6-0-991-004-A01

****ON A/C A321neo-XLR**

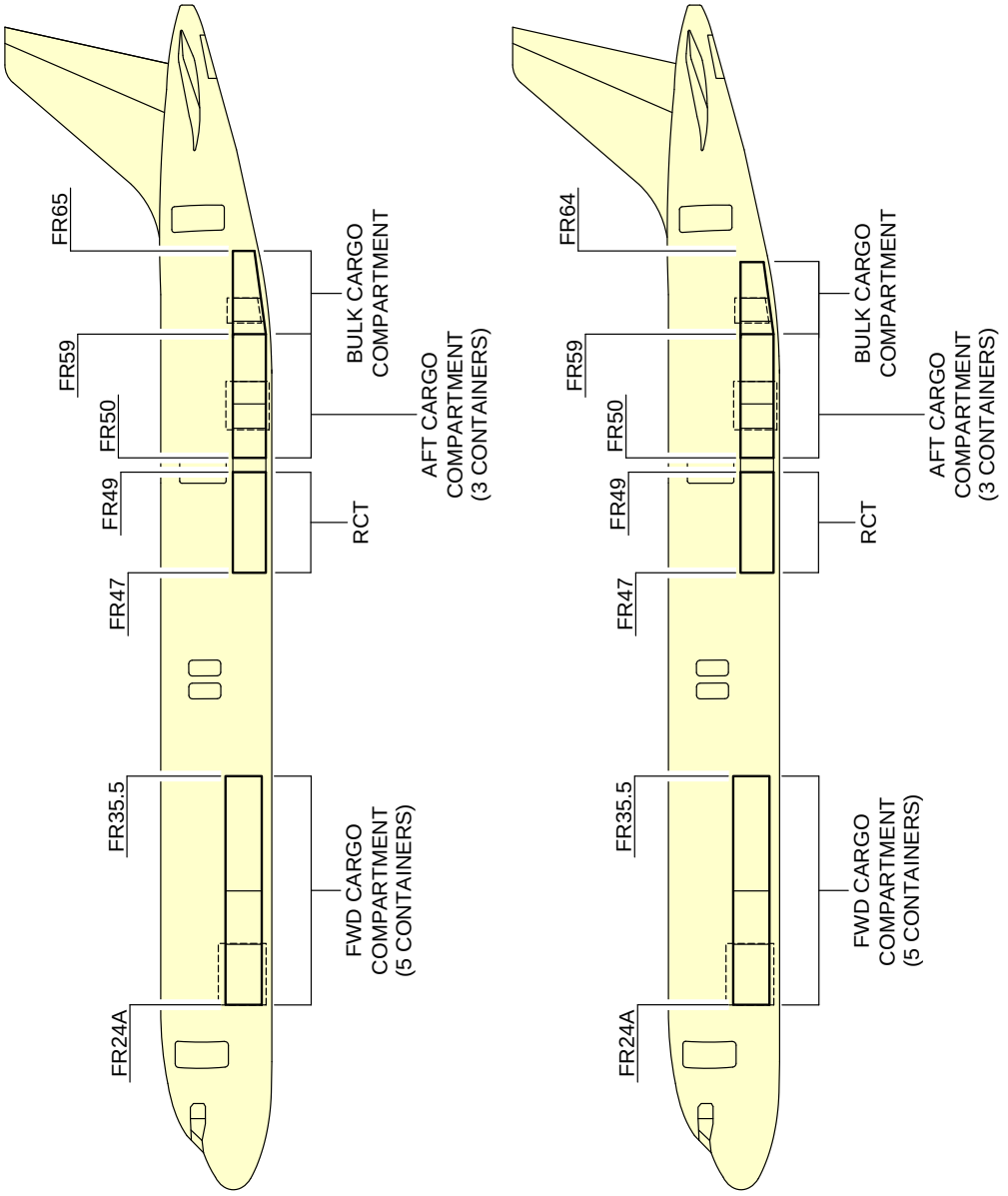

WITH REGULAR WASTE TANK

WITH OPTION INCREASED WASTE TANK

N_AC_020600_1_0140101_01_02

Cargo Compartments
Locations
FIGURE-2-6-0-991-014-A01

****ON A/C A321neo-XLR**

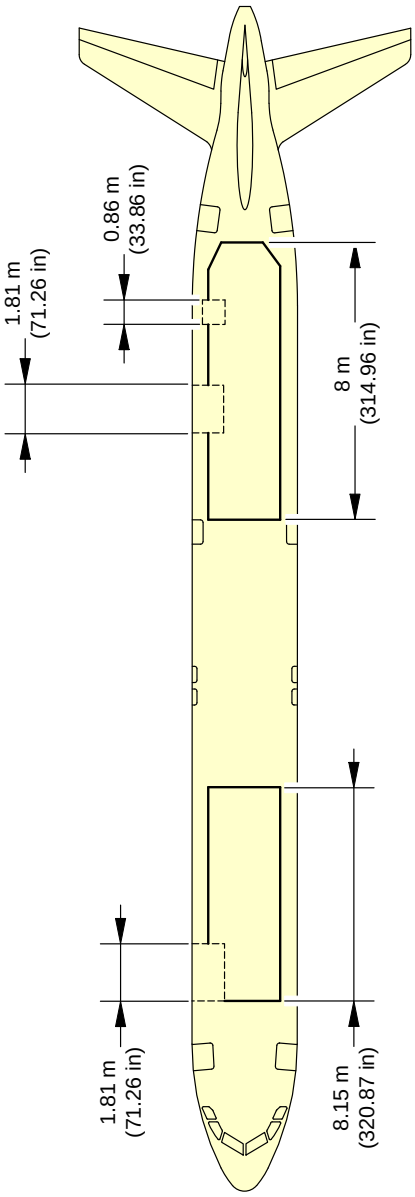

WITH REGULAR WASTE TANK

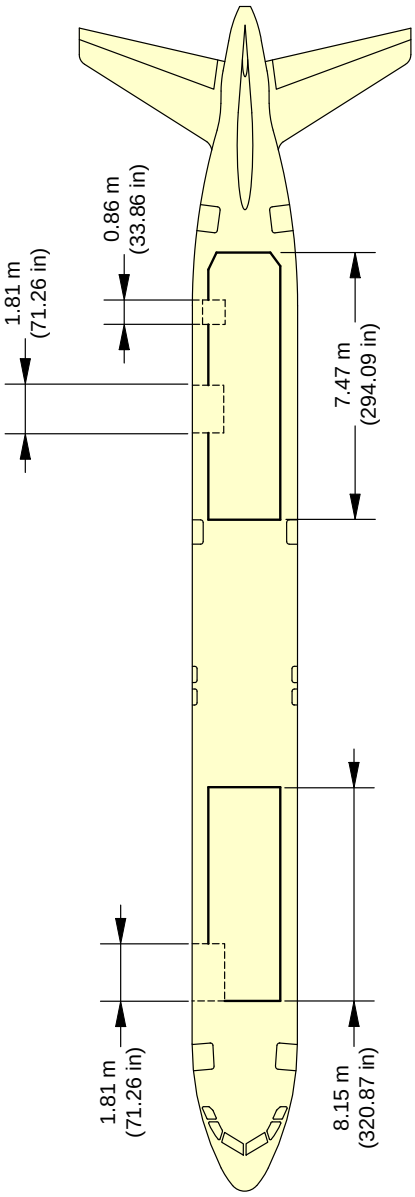

WITH OPTION INCREASED WASTE TANK

N_AC_020600_1_0150101_01_02

Cargo Compartments
Dimensions
FIGURE-2-6-0-991-015-A01

**ON A/C A321-100 A321-200 A321neo

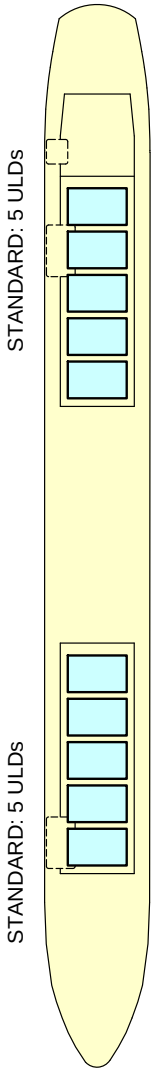

N_AC_020600_1_0120101_01_02

Cargo Compartments
Loading Combinations
FIGURE-2-6-0-991-012-A01

****ON A/C A321neo-XLR**

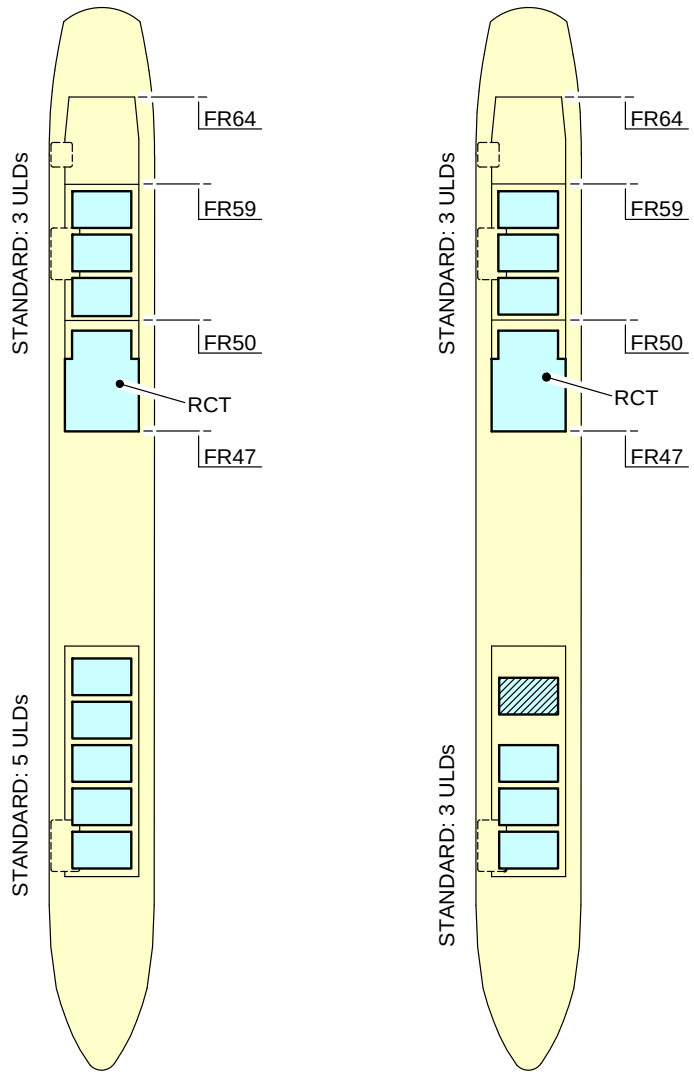

NOTE:

ACT (OPTIONAL)

N_AC_020600_1_0160101_01_01

Cargo Compartments
Loading Combinations
FIGURE-2-6-0-991-016-A01

2-7-0 Door Clearances and Location

****ON A/C A321-100 A321-200 A321neo A321neo-XLR**

Door Clearances

1. This section provides door identification and location.

NOTE : Dimensions of the ground clearances are approximate and will vary with tire type, weight and balance and other special conditions.

****ON A/C A321-100 A321-200 A321neo**

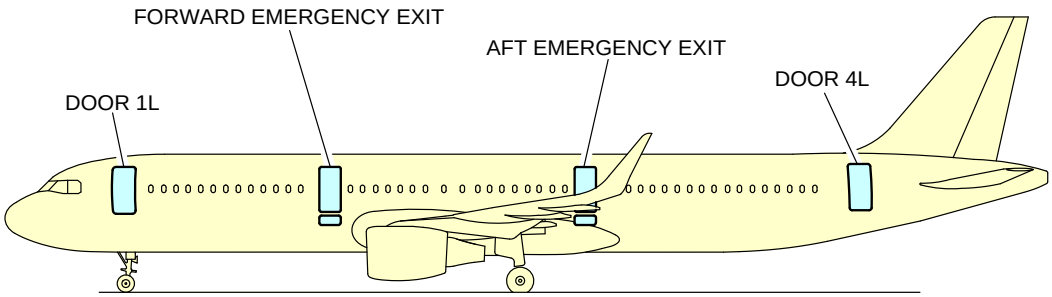

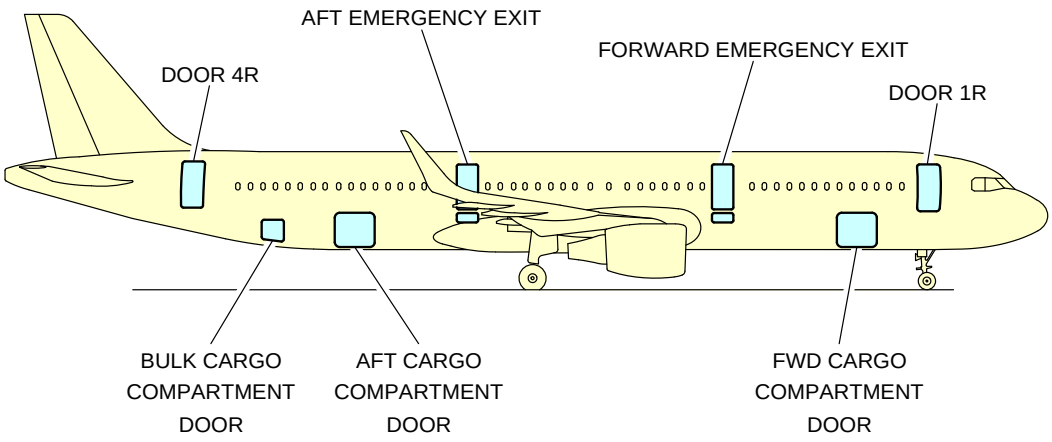

N_AC_020700_1_0040101_01_01

Door Identification and Location
Door Identification (Sheet 1 of 2)
FIGURE-2-7-0-991-004-A01

****ON A/C A321-100 A321-200 A321neo**

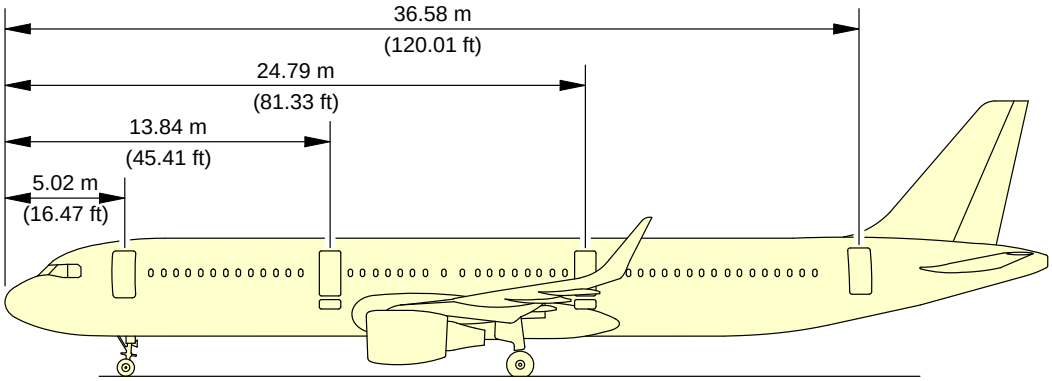

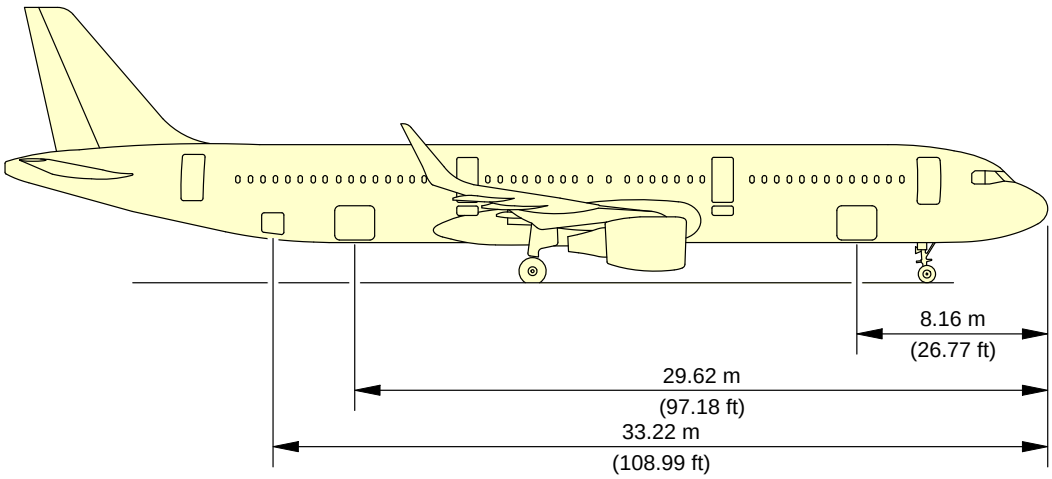

N_AC_020700_1_0040102_01_01

Door Identification and Location
Door Location (Sheet 2 of 2)
FIGURE-2-7-0-991-004-A01

**ON A/C A321neo-XLR

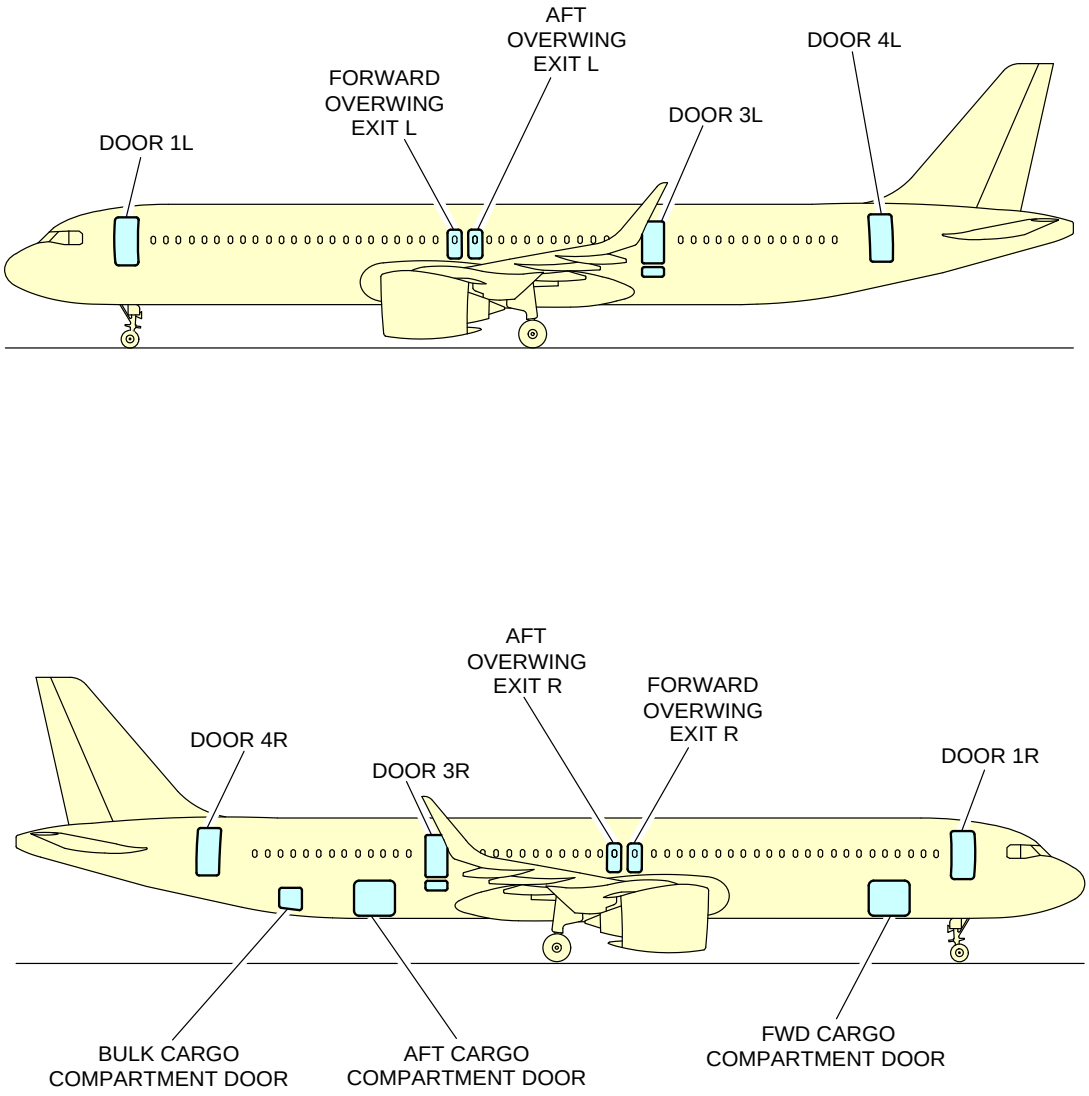

N_AC_020700_1_0470101_01_00

Door Identification and Location
Door Identification (Sheet 1 of 2)
FIGURE-2-7-0-991-047-A01

**ON A/C A321neo-XLR

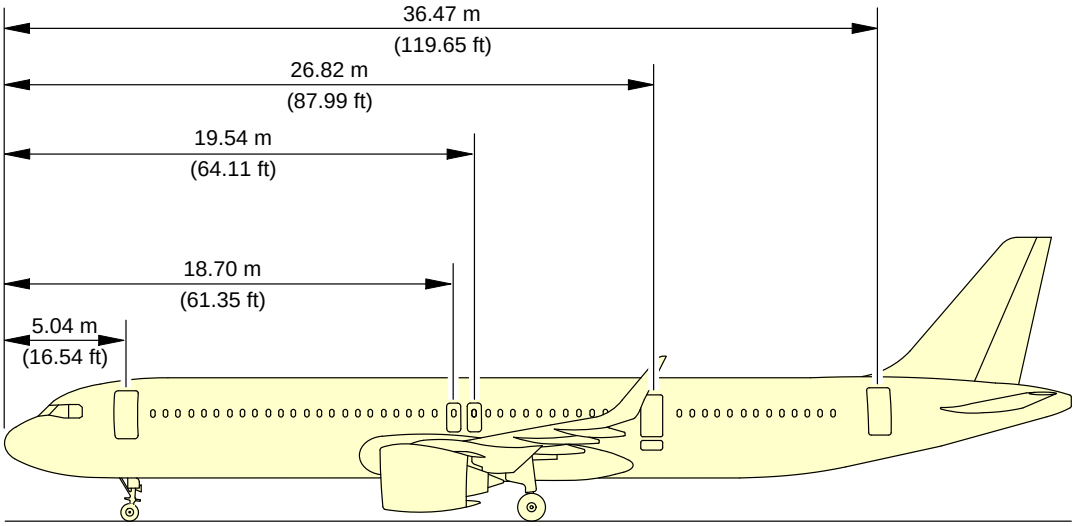

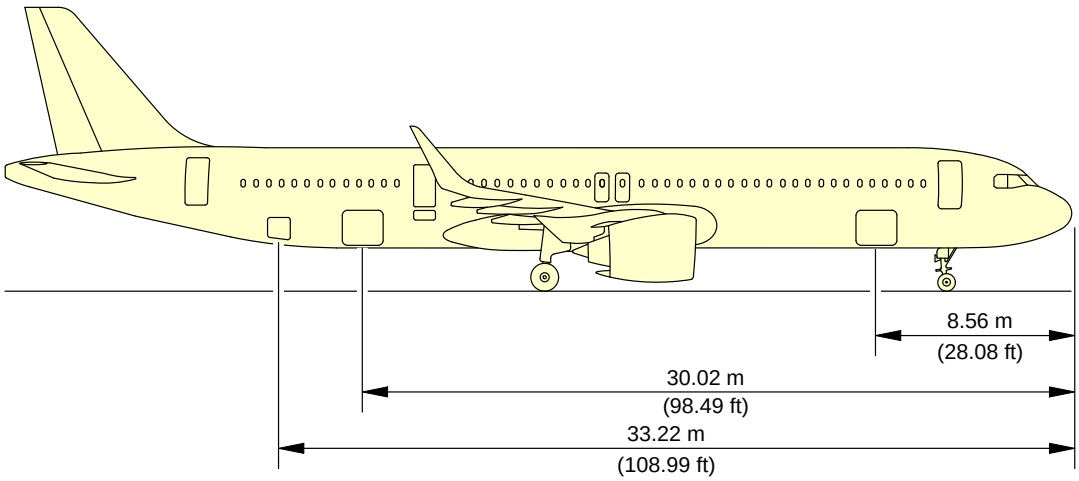

N_AC_020700_1_0470102_01_01

Door Identification and Location
Door Location (Sheet 2 of 2)
FIGURE-2-7-0-991-047-A01

**ON A/C A321-100 A321-200 A321neo A321neo-XLR

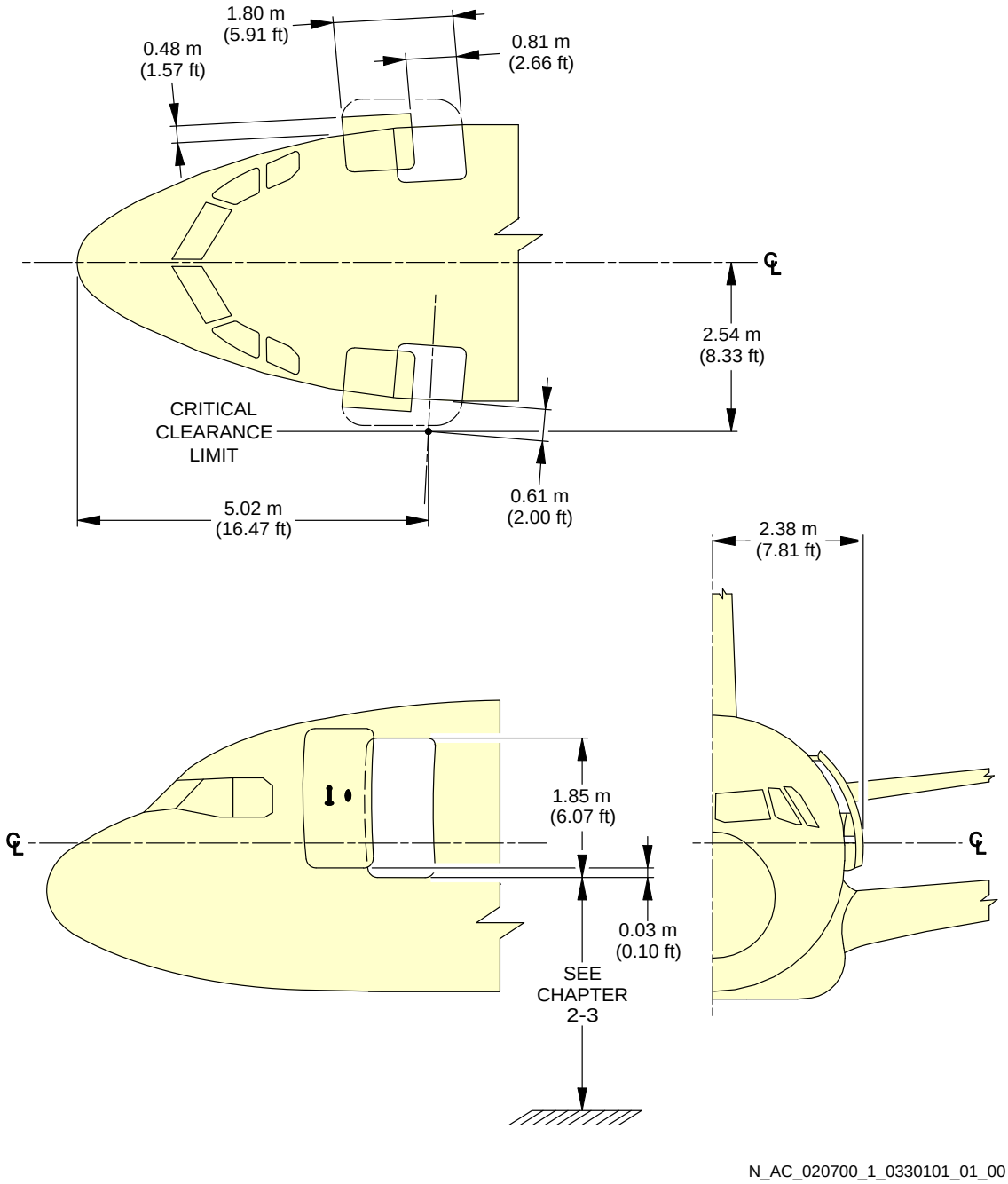

Doors Clearances
Forward Passenger/Crew Doors
FIGURE-2-7-0-991-033-A01

**ON A/C A321-100 A321-200 A321neo

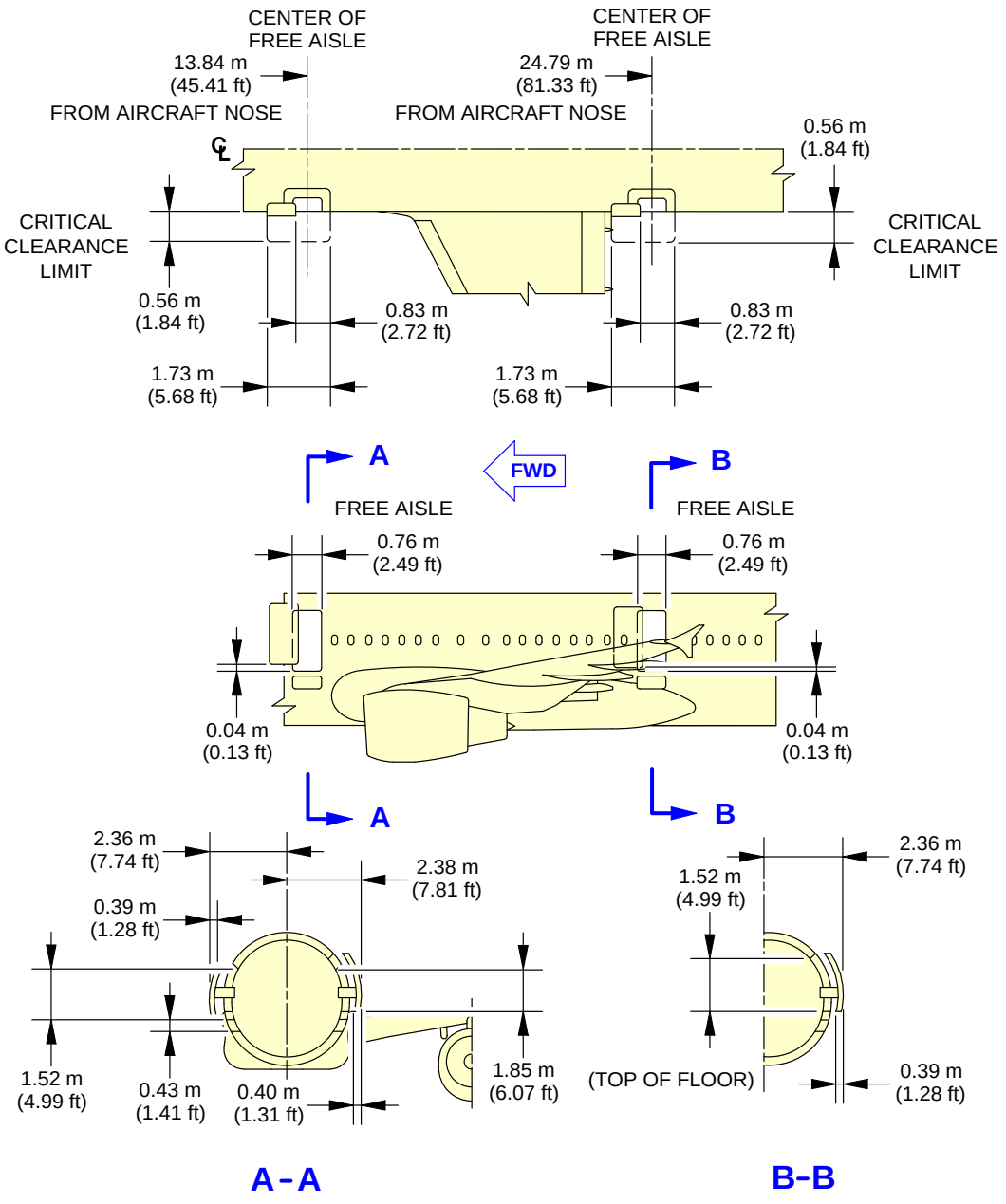

N_AC_020700_1_0340101_01_01

Doors Clearances
Emergency Exits
FIGURE-2-7-0-991-034-A01

**ON A/C A321neo-XLR

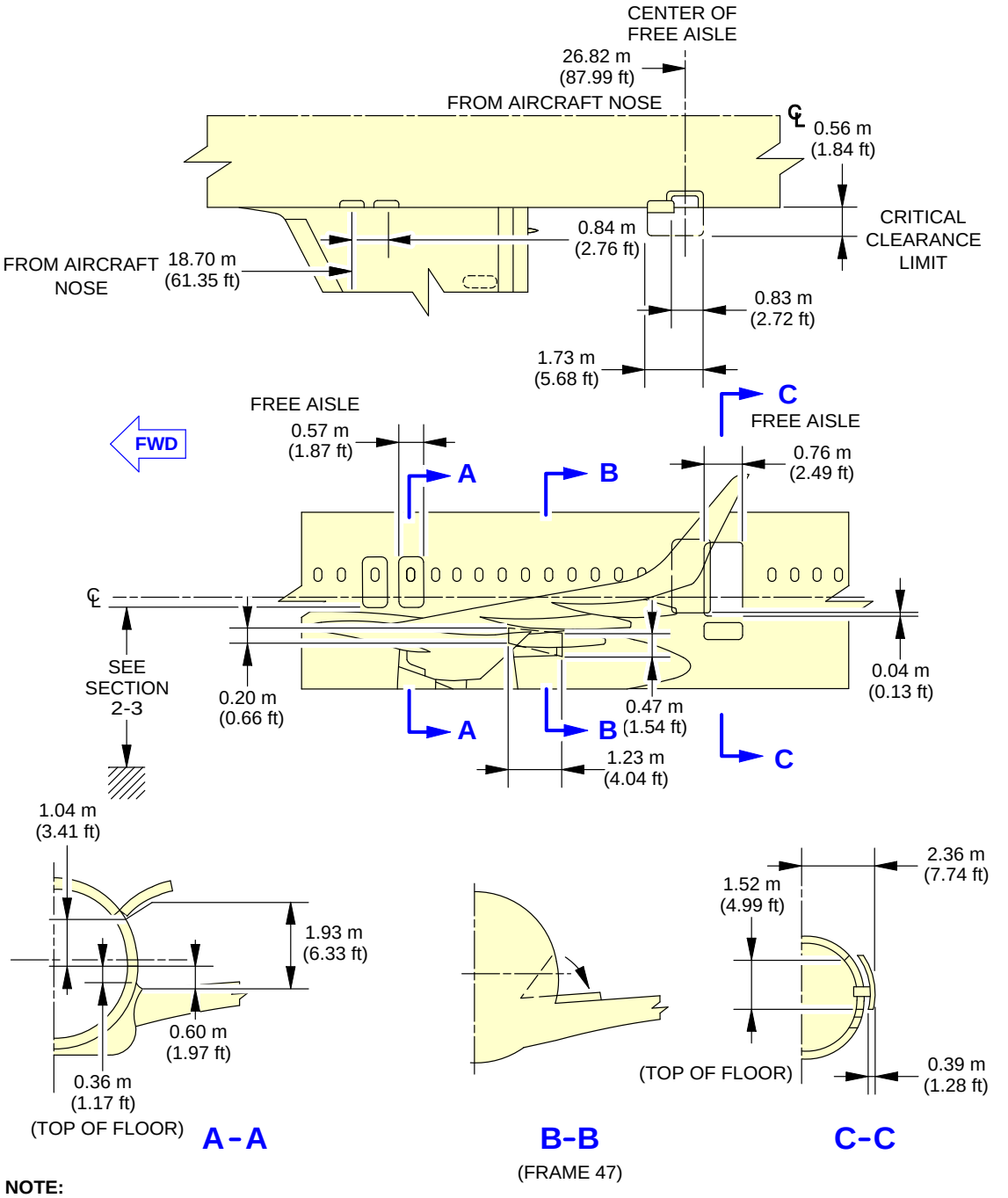

NOTE:

ESCAPE SLIDE COMPARTMENT DOOR OPENS ON WING UPPER SURFACE.

N_AC_020700_1_0460101_01_01

Doors Clearances
Emergency Exits
FIGURE-2-7-0-991-046-A01

**ON A/C A321-100 A321-200 A321neo A321neo-XLR

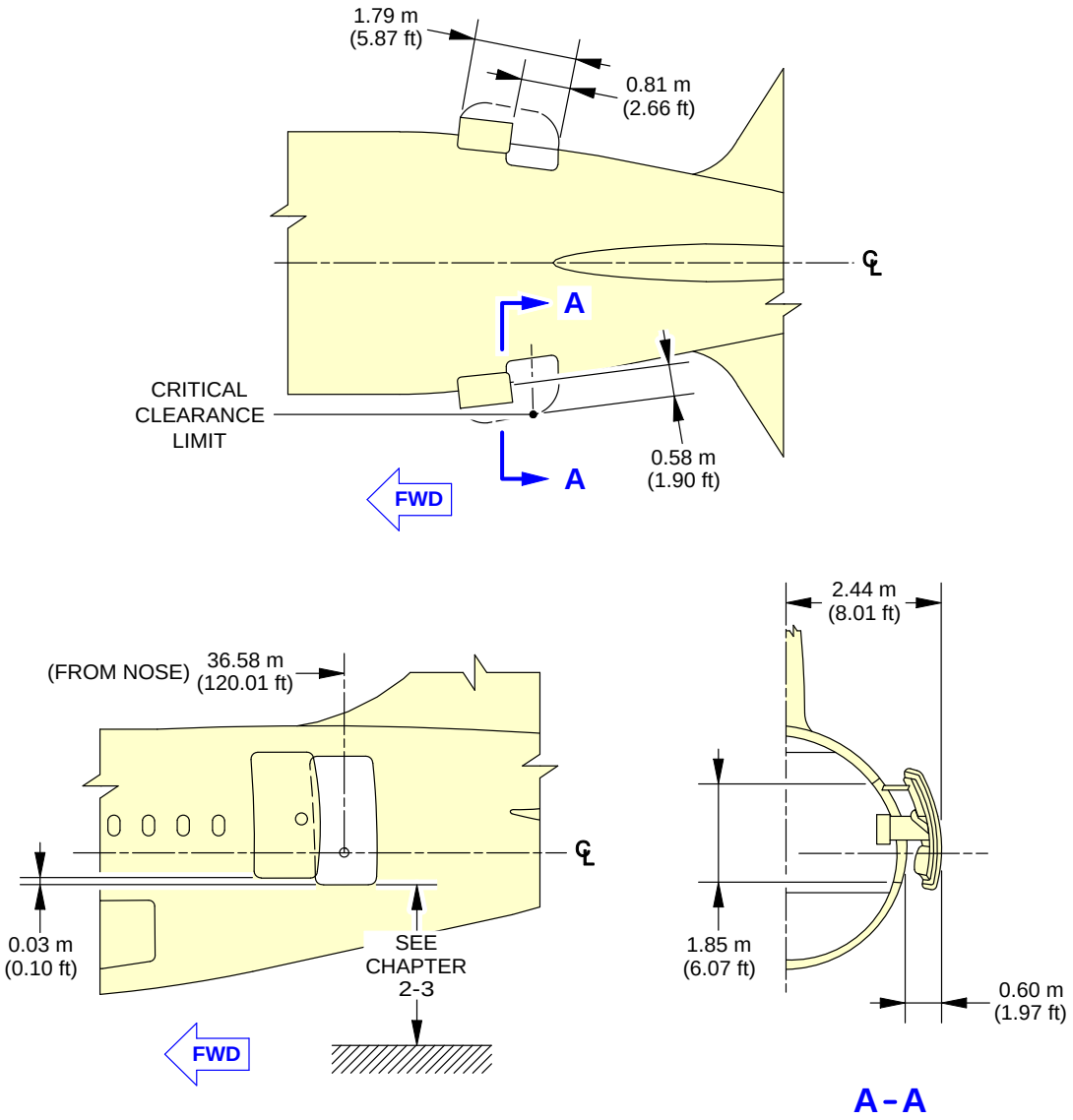

N_AC_020700_1_0350101_01_01

Doors Clearances
Aft Passenger/Crew Doors
FIGURE-2-7-0-991-035-A01

**ON A/C A321-100 A321-200

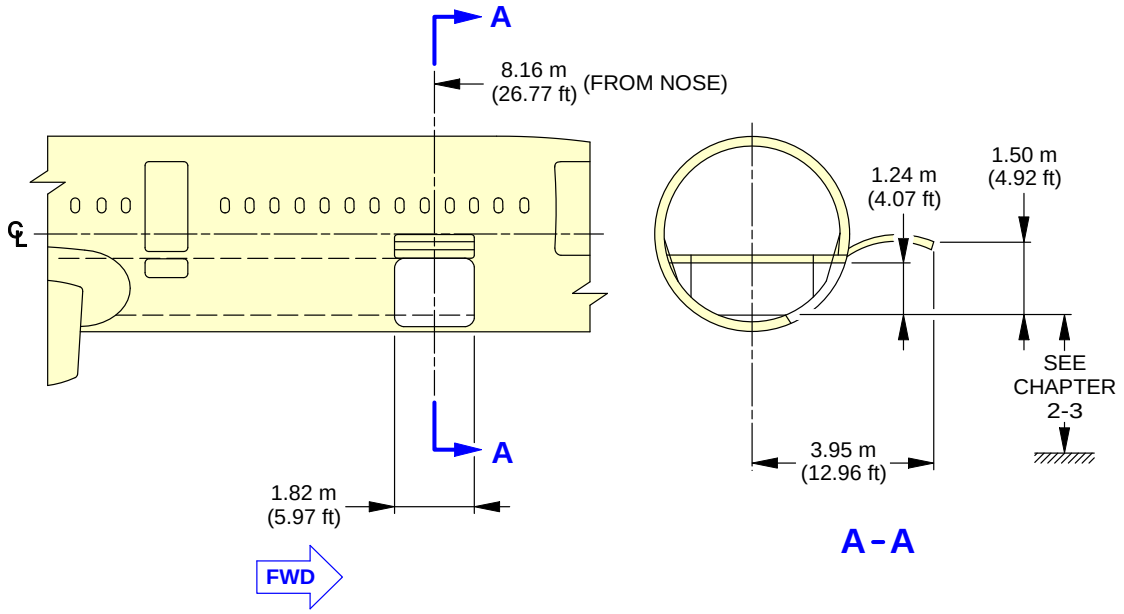

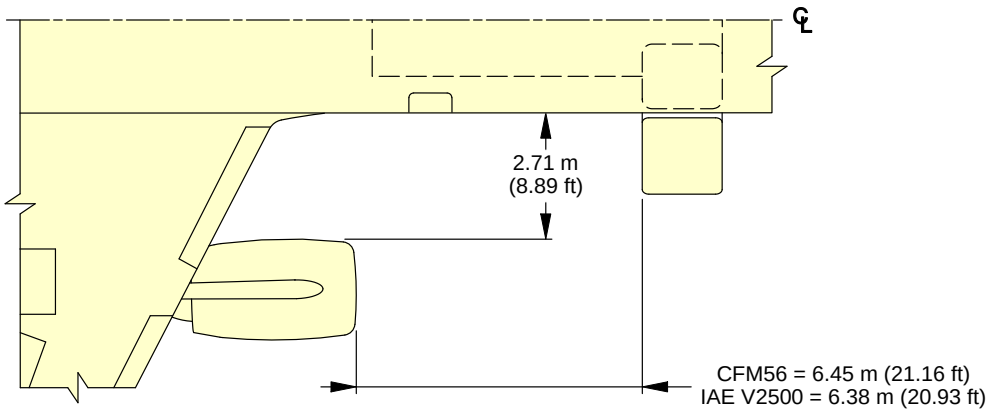

N_AC_020700_1_0360101_01_00

Door Clearances
Forward Cargo Compartment Door
FIGURE-2-7-0-991-036-A01

**ON A/C A321neo A321neo-XLR

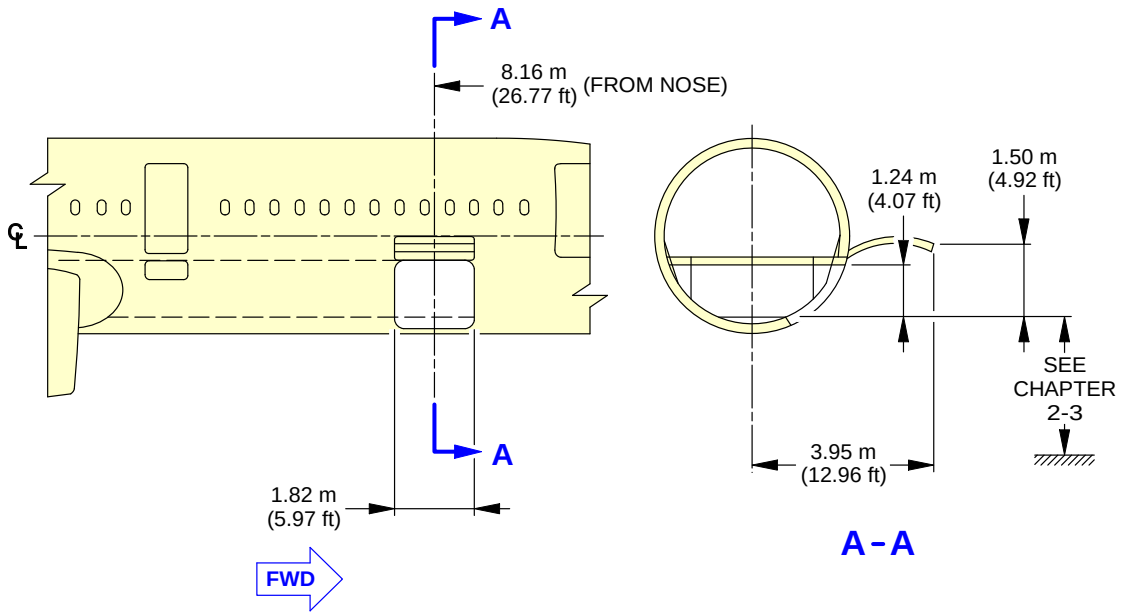

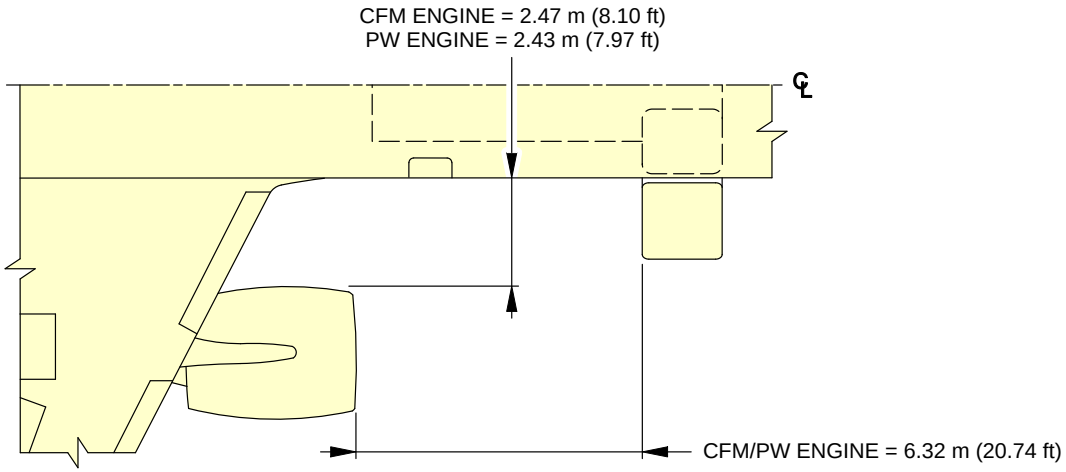

N_AC_020700_1_0370101_01_00

Door Clearances
Forward Cargo Compartment Door
FIGURE-2-7-0-991-037-A01

**ON A/C A321-100 A321-200 A321neo A321neo-XLR

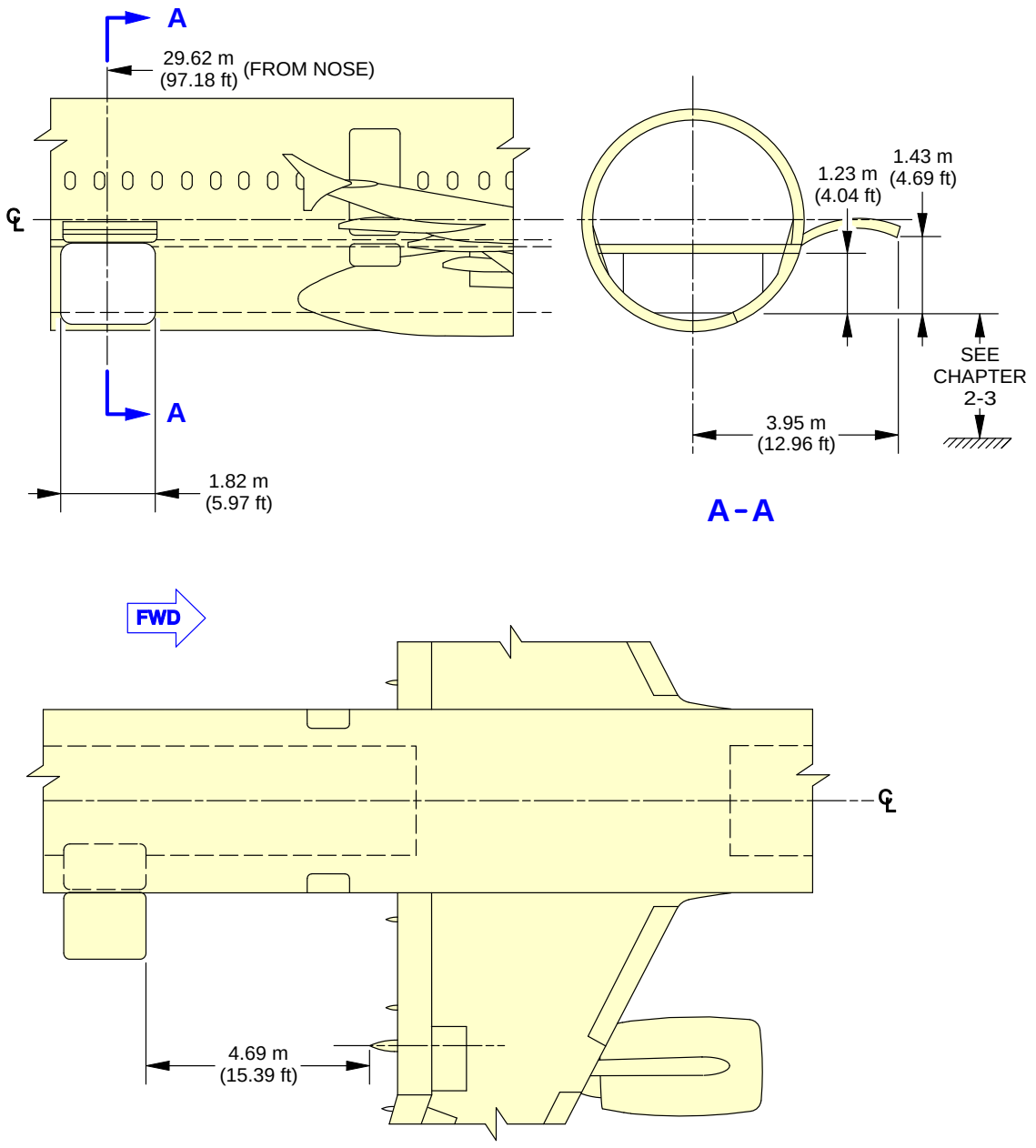

Doors Clearances
Aft Cargo Compartment Door
FIGURE-2-7-0-991-038-A01

**ON A/C A321-100 A321-200 A321neo A321neo-XLR

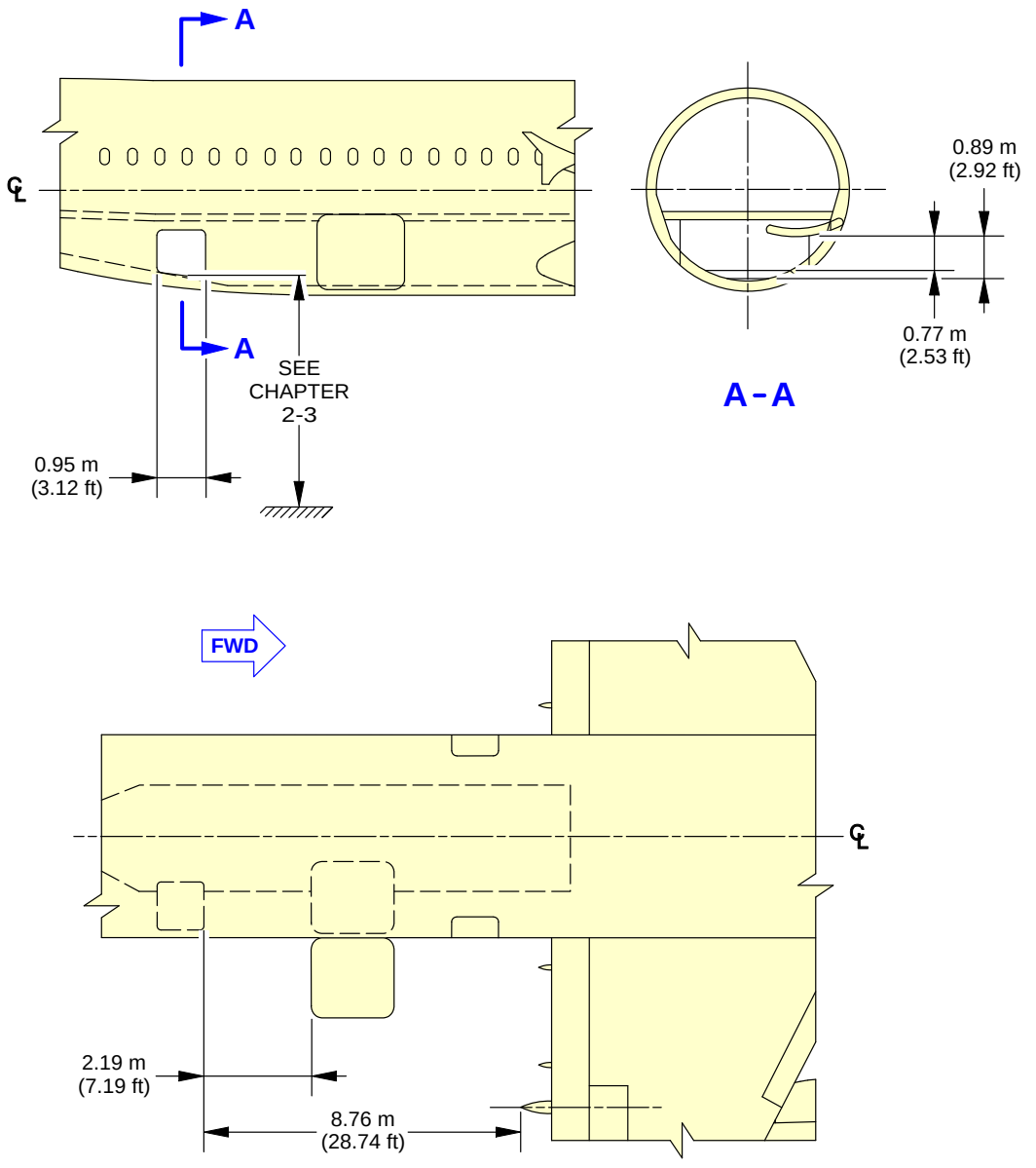

N_AC_020700_1_0390101_01_01

Doors Clearances
Bulk Cargo Compartment Door
FIGURE-2-7-0-991-039-A01

**ON A/C A321-100 A321-200 A321neo A321neo-XLR

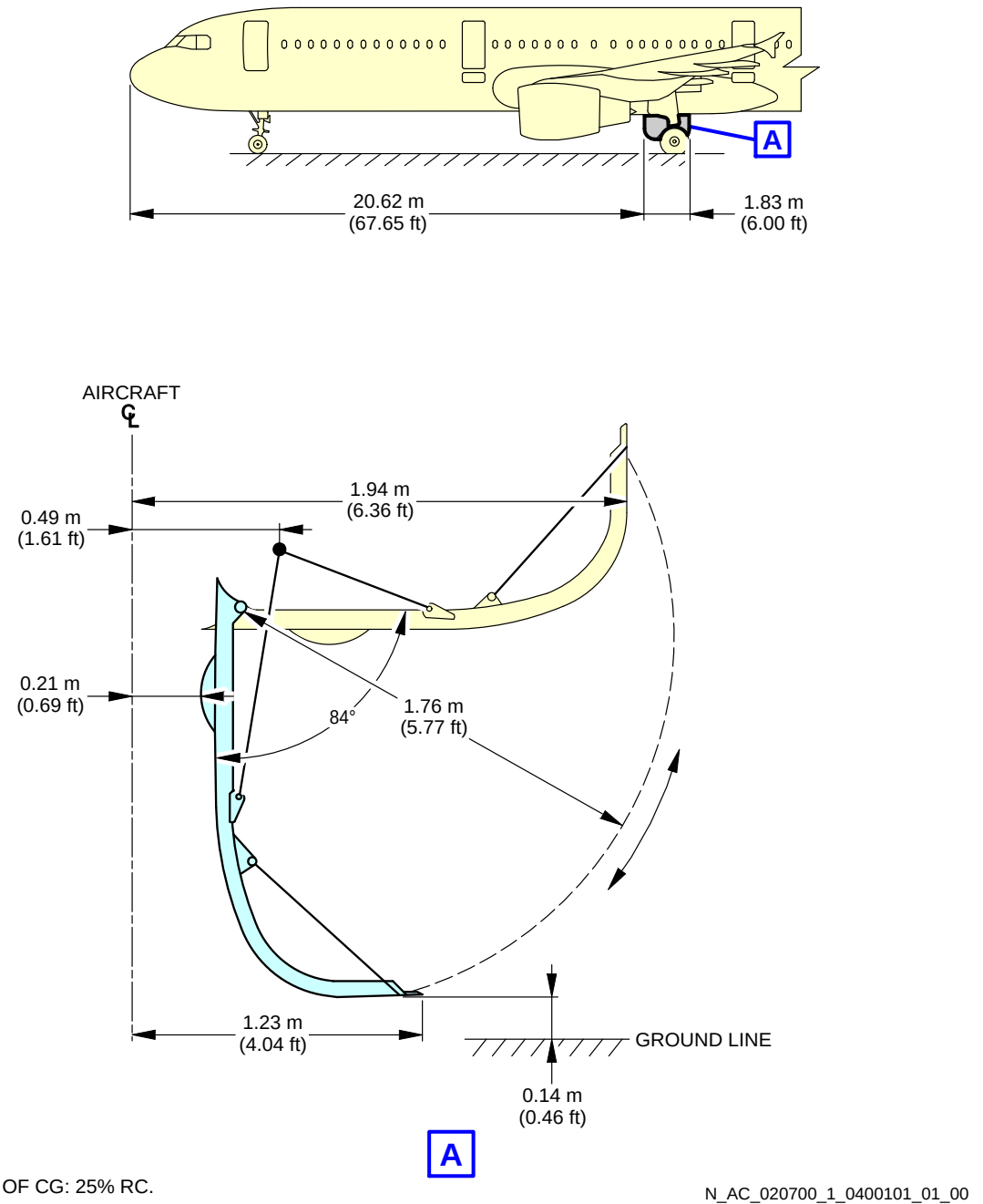

NOTE:
VALUE OF CG: 25% RC.

N_AC_020700_1_0400101_01_00

Doors Clearances
Main Landing Gear Doors
FIGURE-2-7-0-991-040-A01

**ON A/C A321-100 A321-200 A321neo A321neo-XLR

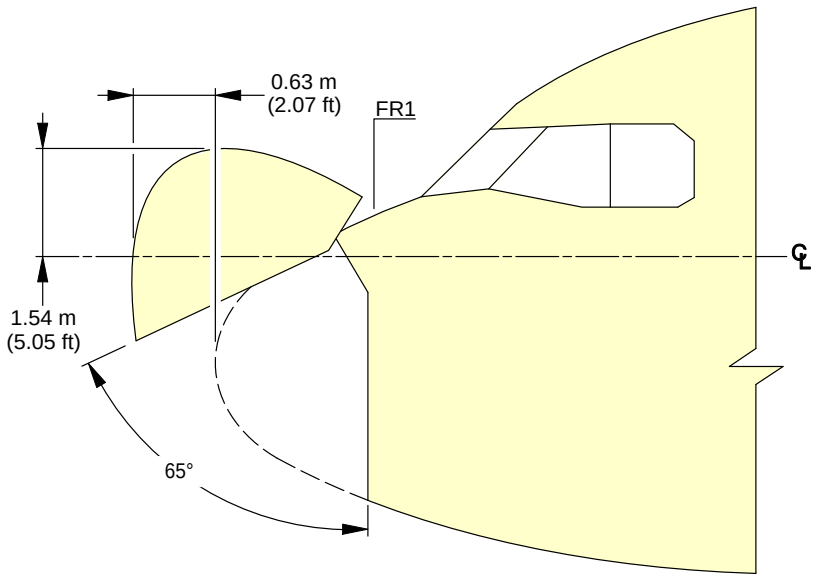

N_AC_020700_1_0410101_01_00

Doors Clearances
Radome
FIGURE-2-7-0-991-041-A01

**ON A/C A321-100 A321-200 A321neo A321neo-XLR

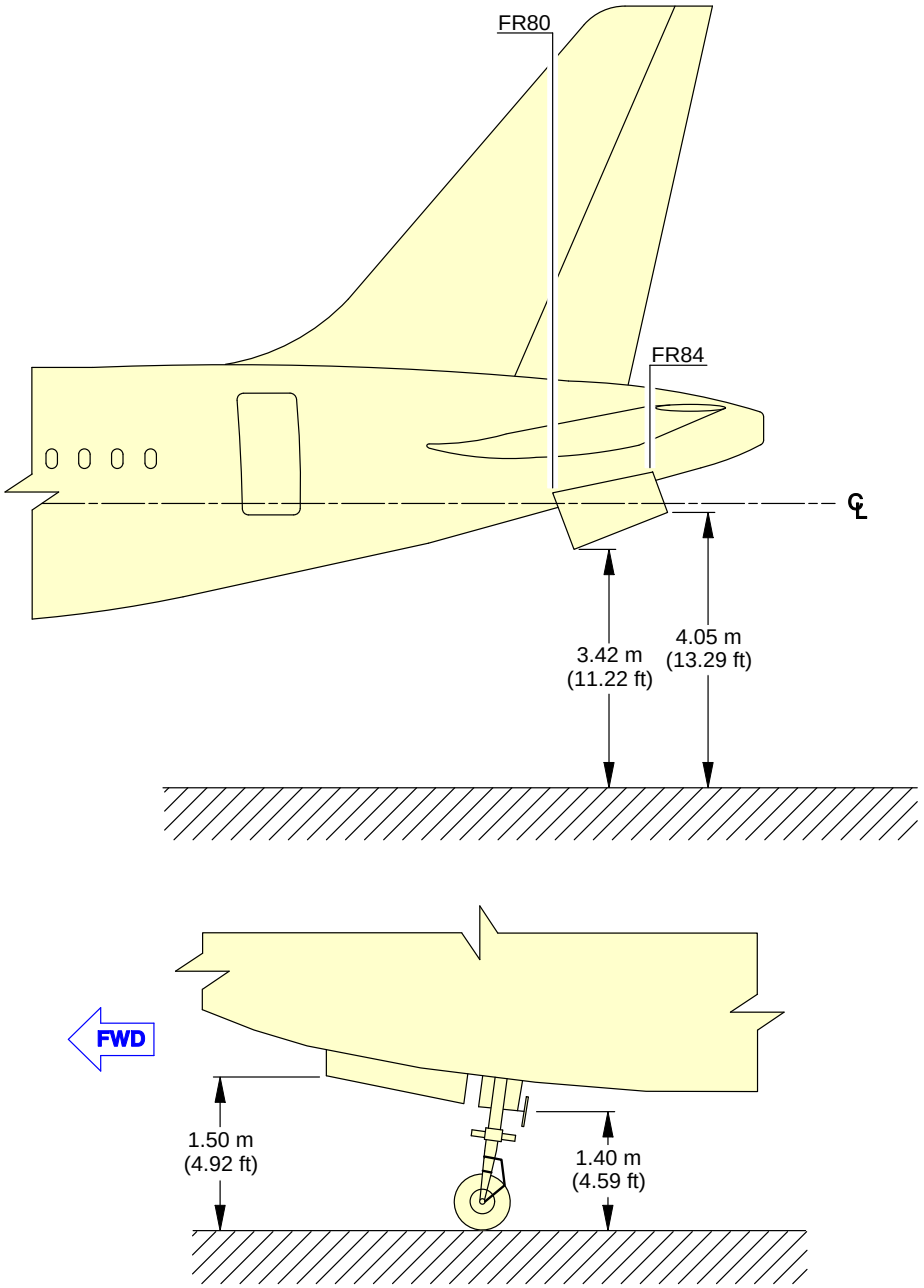

NOTE:
VALUE OF CG: 25% RC.

N_AC_020700_1_0420101_01_00

Doors Clearances
APU and Nose Landing Gear Doors
FIGURE-2-7-0-991-042-A01

2-8-0 Escape Slides

****ON A/C A321-100 A321-200 A321neo A321neo-XLR**

Escape Slides

1. General

   This section provides location of slides/rafts facilities and related clearances.

****ON A/C A321-100 A321-200 A321neo**

2. Location

   Slides/rafts facilities are provided at the following location:
   - One single or dual lane slide at each door 1 and 4 (total 04)
   - One single lane slide at each door 2 and 3 (total 04) .

****ON A/C A321neo-XLR**

3. Location

   Slides/rafts facilities are provided at the following locations:
   - One single or dual lane slide at each door 1 and 4 (total 04)
   - One single lane slide at each door 3 (total 02)
   - One dual lane overwing slide at each wing (total 2).

****ON A/C A321-100 A321-200 A321neo**

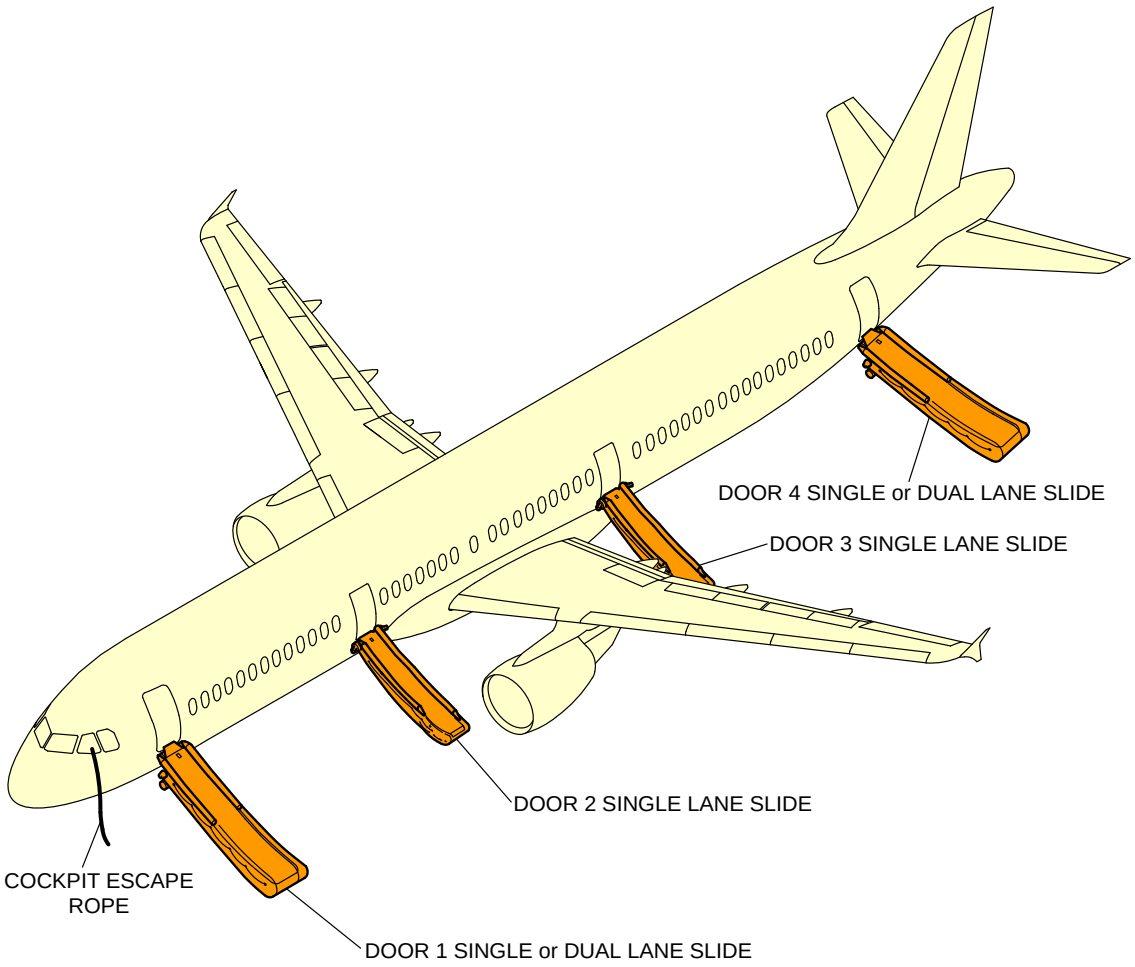

NOTE:
LH SHOWN, RH SYMMETRICAL.

N_AC_020800_1_0070101_01_04

Escape Slides
Location
FIGURE-2-8-0-991-007-A01

****ON A/C A321-100 A321-200 A321neo**

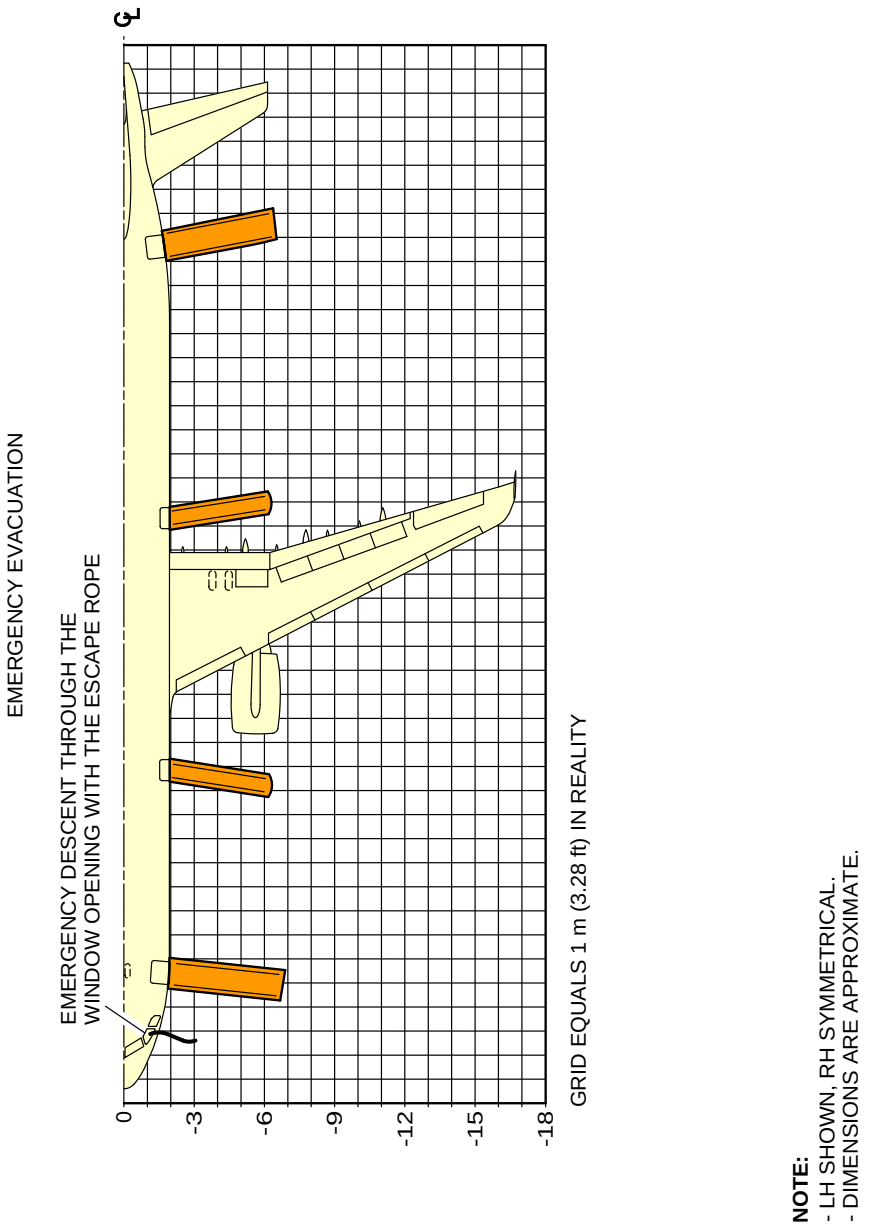

Escape Slides
Dimensions
FIGURE-2-8-0-991-008-A01

**ON A/C A321neo-XLR

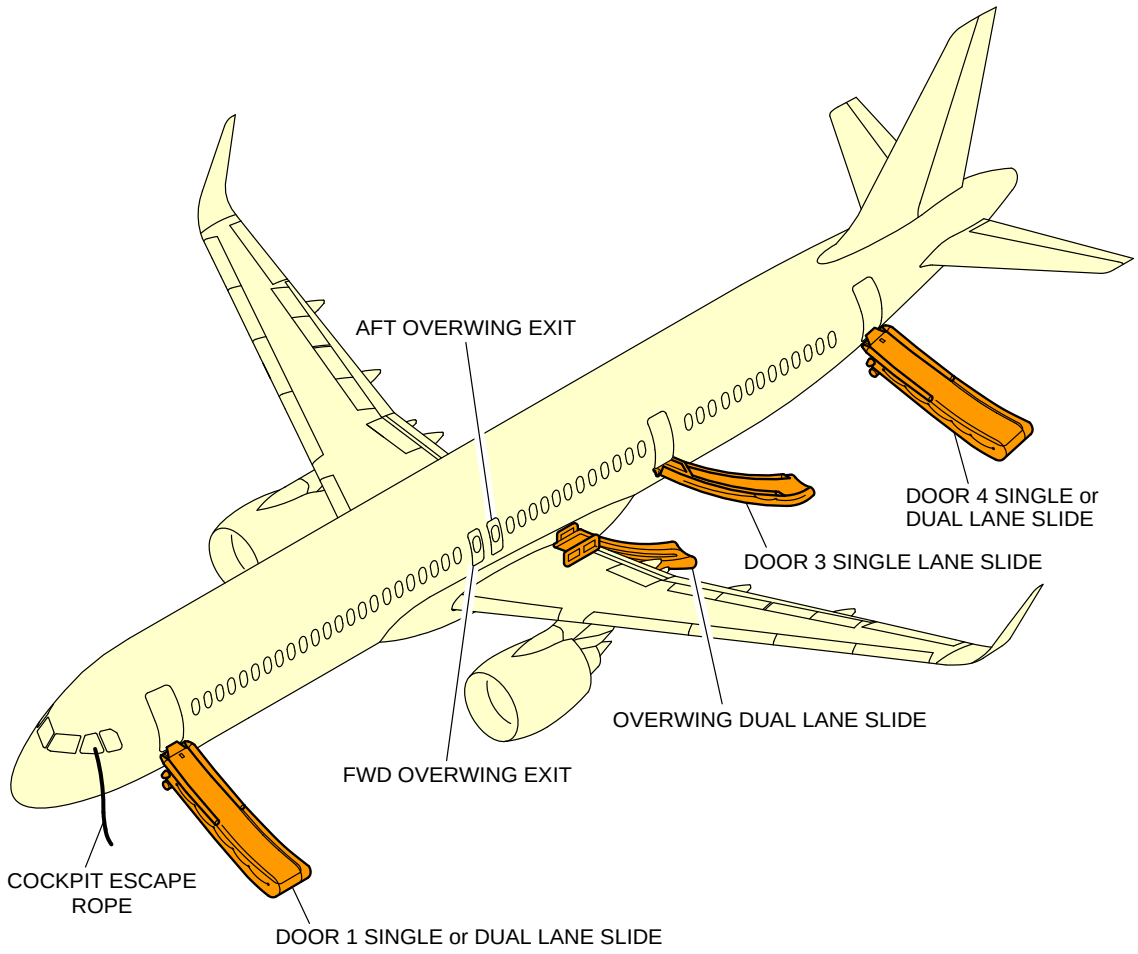

NOTE:
LH SHOWN, RH SYMMETRICAL.

N_AC_020800_1_0100101_01_01

Escape Slides
Location
FIGURE-2-8-0-991-010-A01

**ON A/C A321neo-XLR

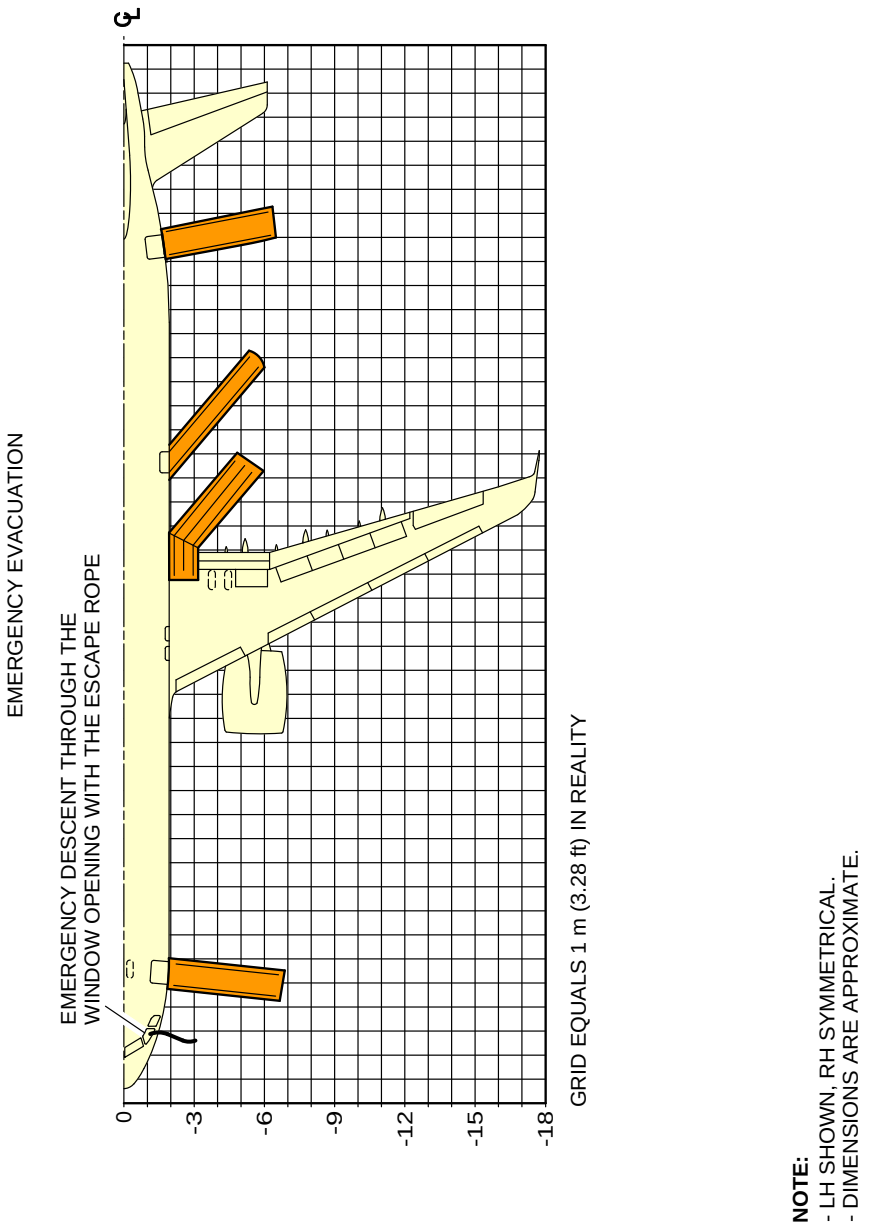

Escape Slides
Dimensions
FIGURE-2-8-0-991-011-A01

2-9-0 Landing Gear

****ON A/C A321-100 A321-200 A321neo A321neo-XLR**

Landing Gear

1. General

The landing gear is of the conventional retractable tricycle type comprising:
- Two main gears with twin-wheel,
- A twin-wheel nose gear.

The main landing gears are located under the wing and retract sideways towards the fuselage centerline.
The nose landing gear retracts forward into a fuselage compartment located between FR9 and FR20.

The landing gears and landing gear doors are operated and controlled electrically and hydraulically.
In abnormal operation, the landing gear can be extended by gravity.

For landing gear footprint and tire size, refer to 07-02-00.

2. Main Landing Gear

A. Twin-Wheel

Each of the two main landing gear assemblies consists of a conventional two-wheel direct type with an integral shock absorber supported in the fore and aft directions by a fixed drag strut and laterally by a folding strut mechanically locked when in the DOWN position.

3. Nose Landing Gear

The nose landing gear consists of a leg with a built-in shock absorber strut, carrying twin wheels with adequate shimmy damping and a folding strut mechanically locked when in the DOWN position.

4. Nose Wheel Steering

Steering is controlled by two hand wheels in the cockpit. For steering angle controlled by the hand wheels, refer to AMM 32-51-00.
For steering angle limitation, refer to AMM 09-10-00.

A steering disconnection box is installed on the nose landing gear to allow steering deactivation for towing purposes.

5. Landing Gear Servicing Points

A. General

Filling of the landing-gear shock absorbers is done through MIL-PRF-6164 standard valves.

Charging of the landing-gear shock absorbers is accomplished with nitrogen through MIL-PRF-6164 standard valves.

B. Charging Pressure

For charging of the landing-gear shock absorbers, refer to AMM 12-14-32.

6. Braking

A. General

The four main wheels are equipped with carbon multidisc brakes.

The braking system is electrically controlled and hydraulically operated.

The braking system has four braking modes plus autobrake and anti-skid systems:
- Normal braking with anti-skid capability,
- Alternative braking with anti-skid capability,
- Alternative braking without anti-skid capability,
- Parking brake with full pressure application capability only.

B. In-Flight Wheel Braking

The main gear wheels are braked automatically before the wheels enter the wheel bay.

The nose gear wheels are stopped by the wheels contacting a rubbing strip (the brake band) when the gear is in the retracted position.

**ON A/C A321-100 A321-200 A321neo A321neo-XLR

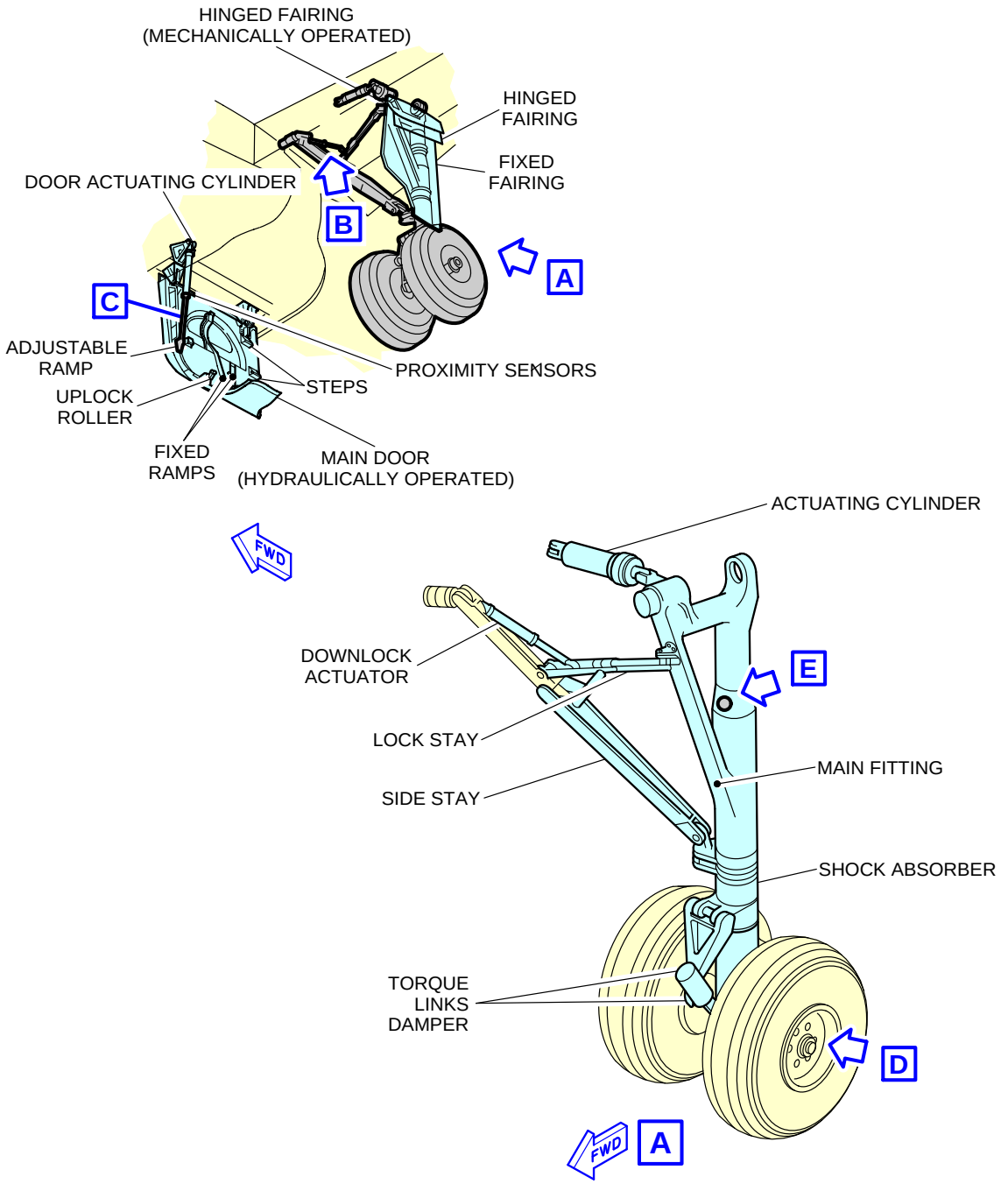

NOTE: MAIN DOOR SHOWN OPEN IN GROUND MAINTENANCE POSITION.

N_AC_020900_1_0160101_01_00

Landing Gear
Main Landing Gear - Twin-Wheel (Sheet 1 of 2)
FIGURE-2-9-0-991-016-A01

**ON A/C A321-100 A321-200 A321neo A321neo-XLR

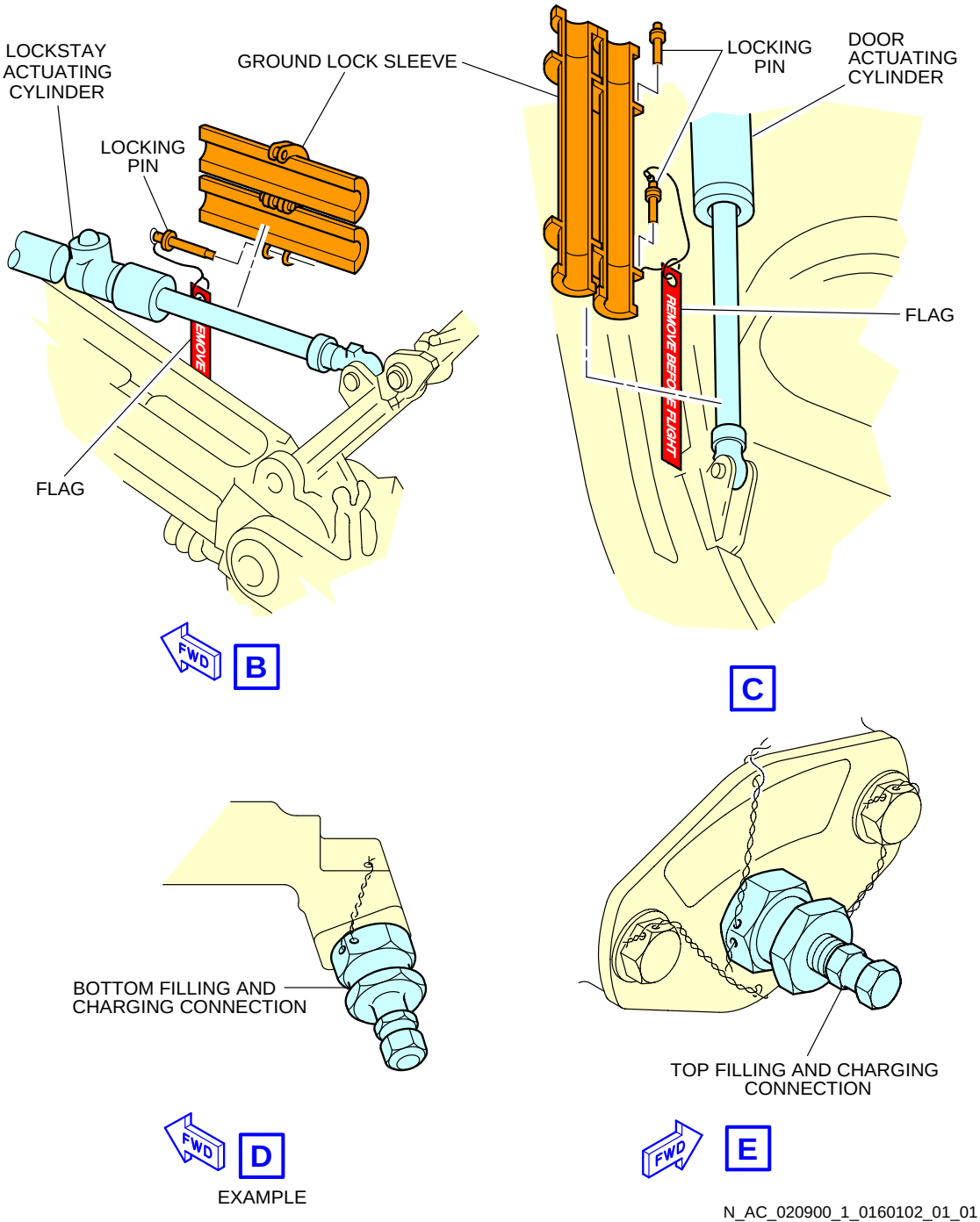

Landing Gear
Main Landing Gear - Twin-Wheel (Sheet 2 of 2)
FIGURE-2-9-0-991-016-A01

**ON A/C A321-100 A321-200 A321neo A321neo-XLR

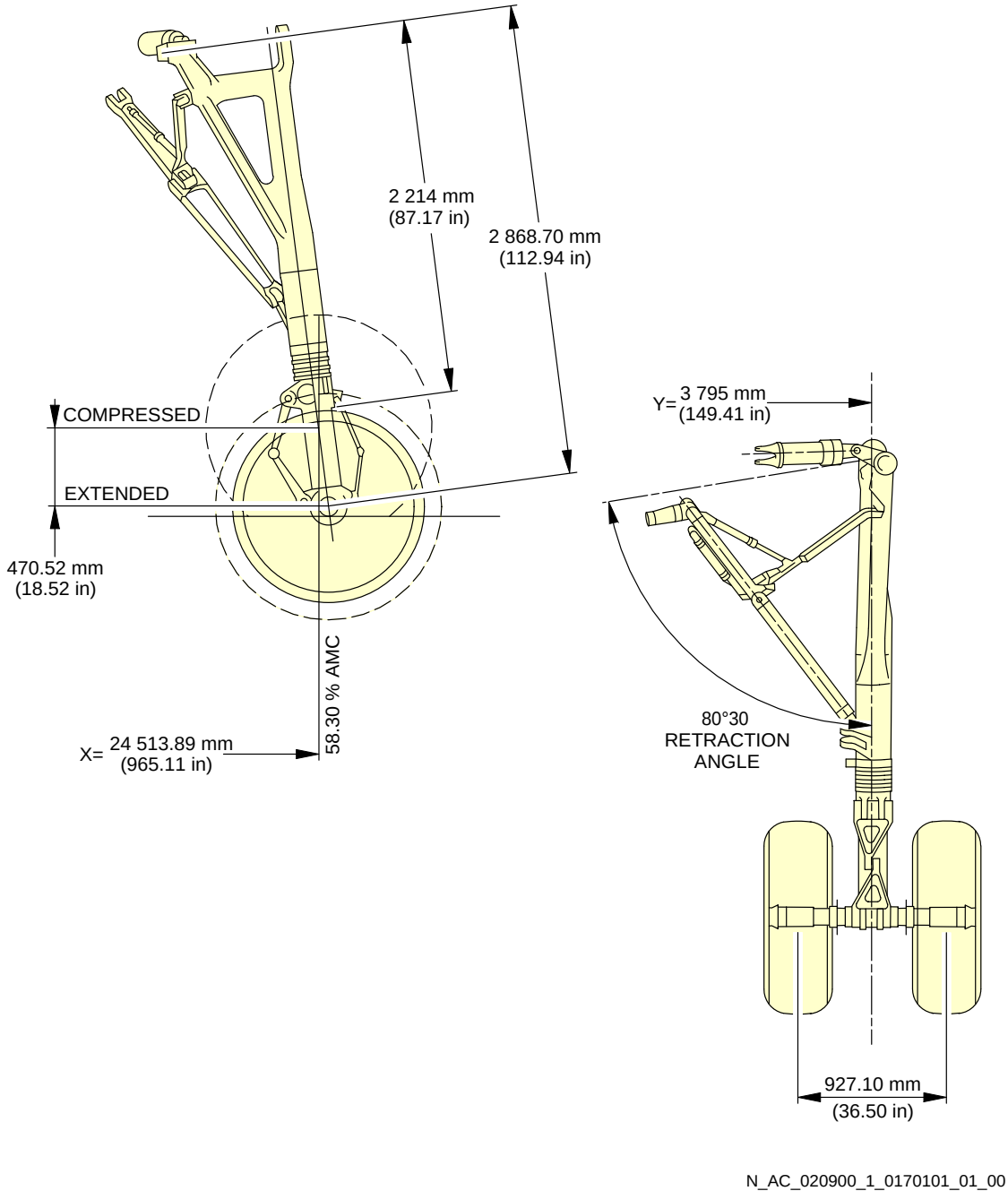

Landing Gear
Main Landing Gear Dimensions - Twin-Wheel
FIGURE-2-9-0-991-017-A01

**ON A/C A321-100 A321-200 A321neo A321neo-XLR

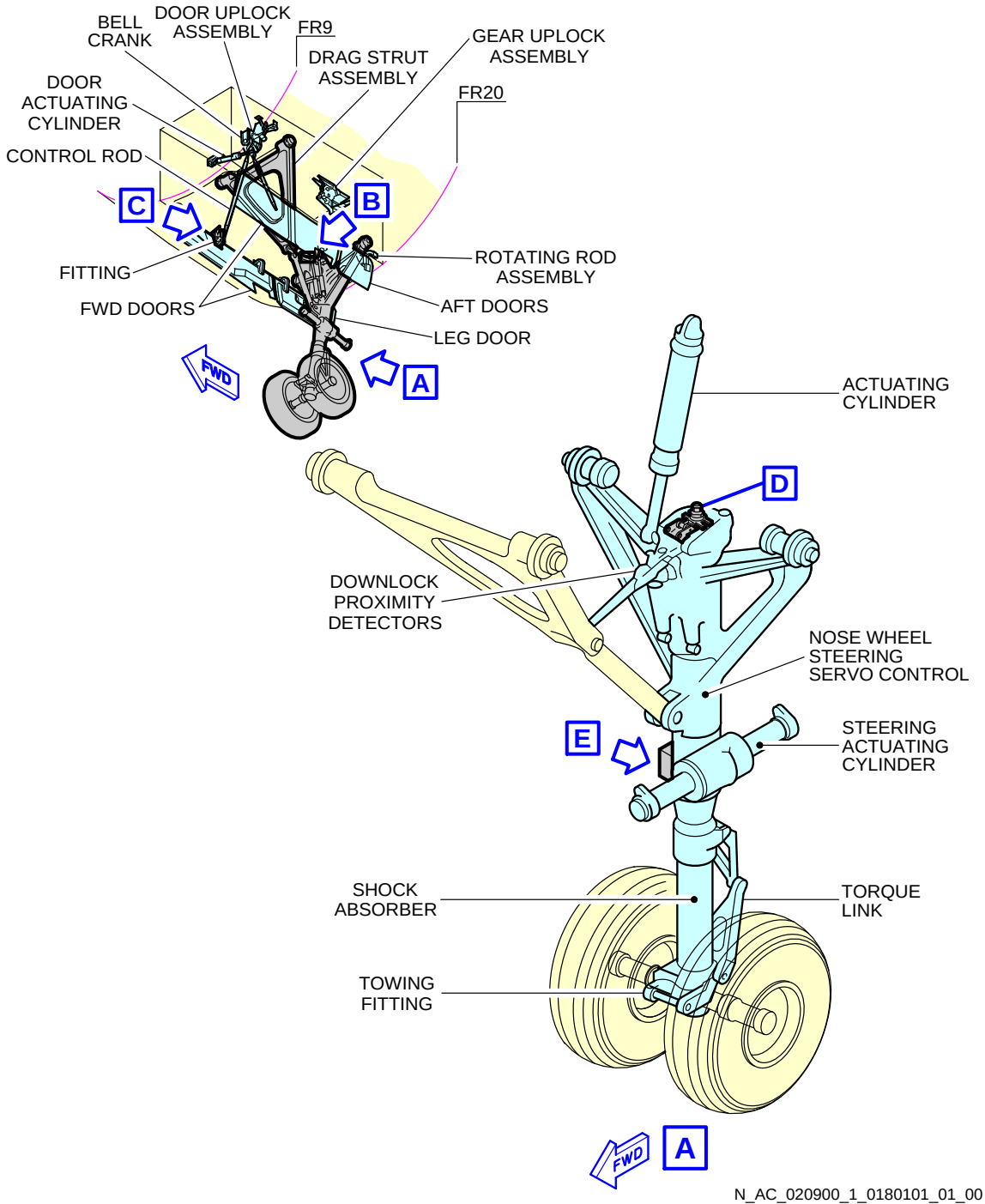

Landing Gear
Nose Landing Gear (Sheet 1 of 2)
FIGURE-2-9-0-991-018-A01

**ON A/C A321-100 A321-200 A321neo A321neo-XLR

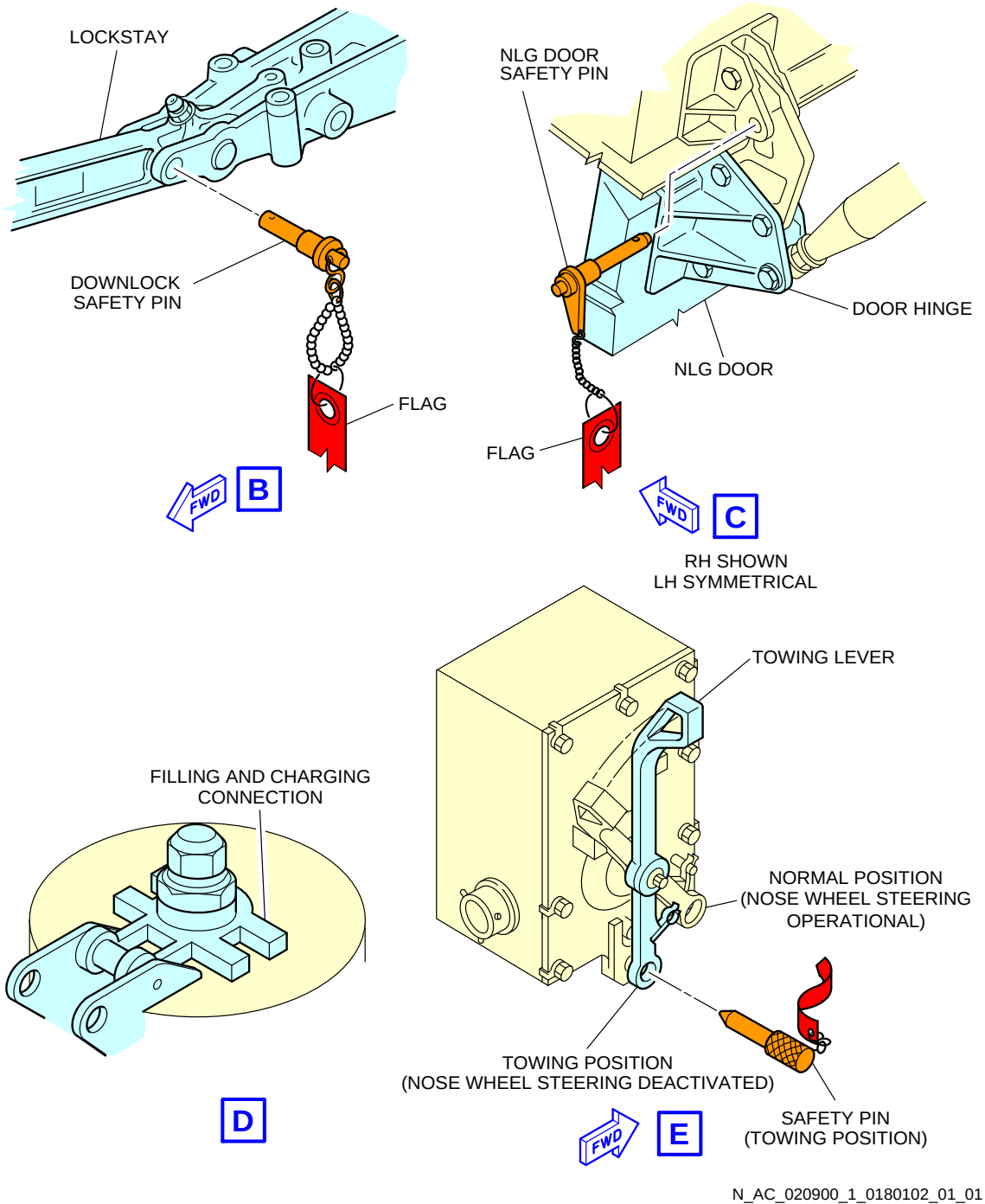

Landing Gear
Nose Landing Gear (Sheet 2 of 2)
FIGURE-2-9-0-991-018-A01

**ON A/C A321-100 A321-200 A321neo A321neo-XLR

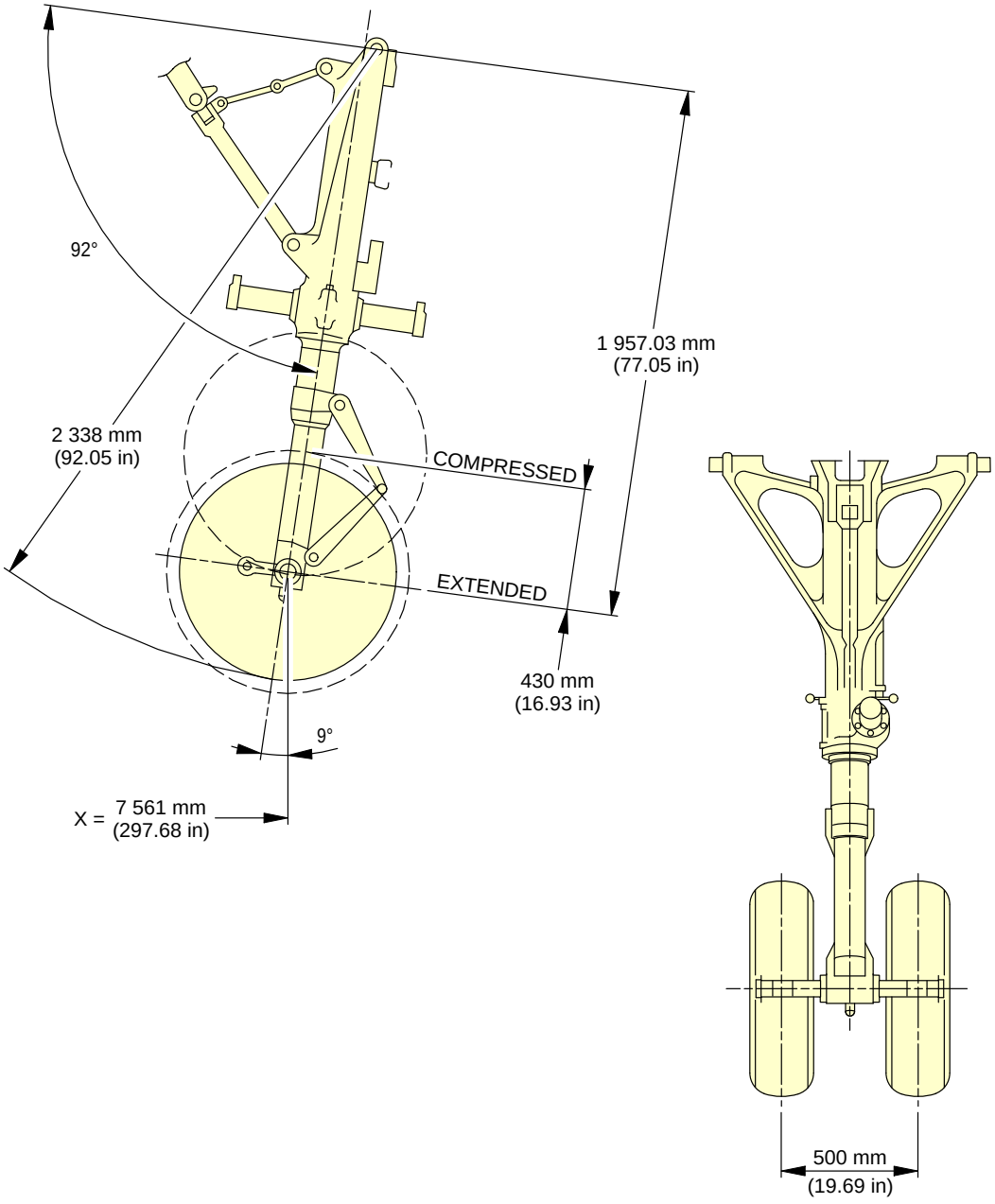

N_AC_020900_1_0190101_01_00

Landing Gear
Nose Landing Gear Dimensions
FIGURE-2-9-0-991-019-A01

****ON A/C A321-100 A321-200 A321neo A321neo-XLR**

Landing Gear Maintenance Pits

1. Description

The minimum maintenance pit envelopes for the landing-gear shock absorber removal are shown in FIGURE 2-9-0-991-026-A and FIGURE 2-9-0-991-027-A.

All dimensions shown are minimum dimensions with zero clearances.

The dimensions for the pits have been determined as follows:

- The length and width of the pits allow the gear to rotate as the weight is taken off the landing gear.
- The depth of the pits allows the shock absorber to be removed when all the weight is taken off the landing gear.

Dimensions for elevators and associated mechanisms must be added to those in FIGURE 2-9-0-991-026-A and FIGURE 2-9-0-991-027-A.

**ON A/C A321-100 A321-200 A321neo A321neo-XLR

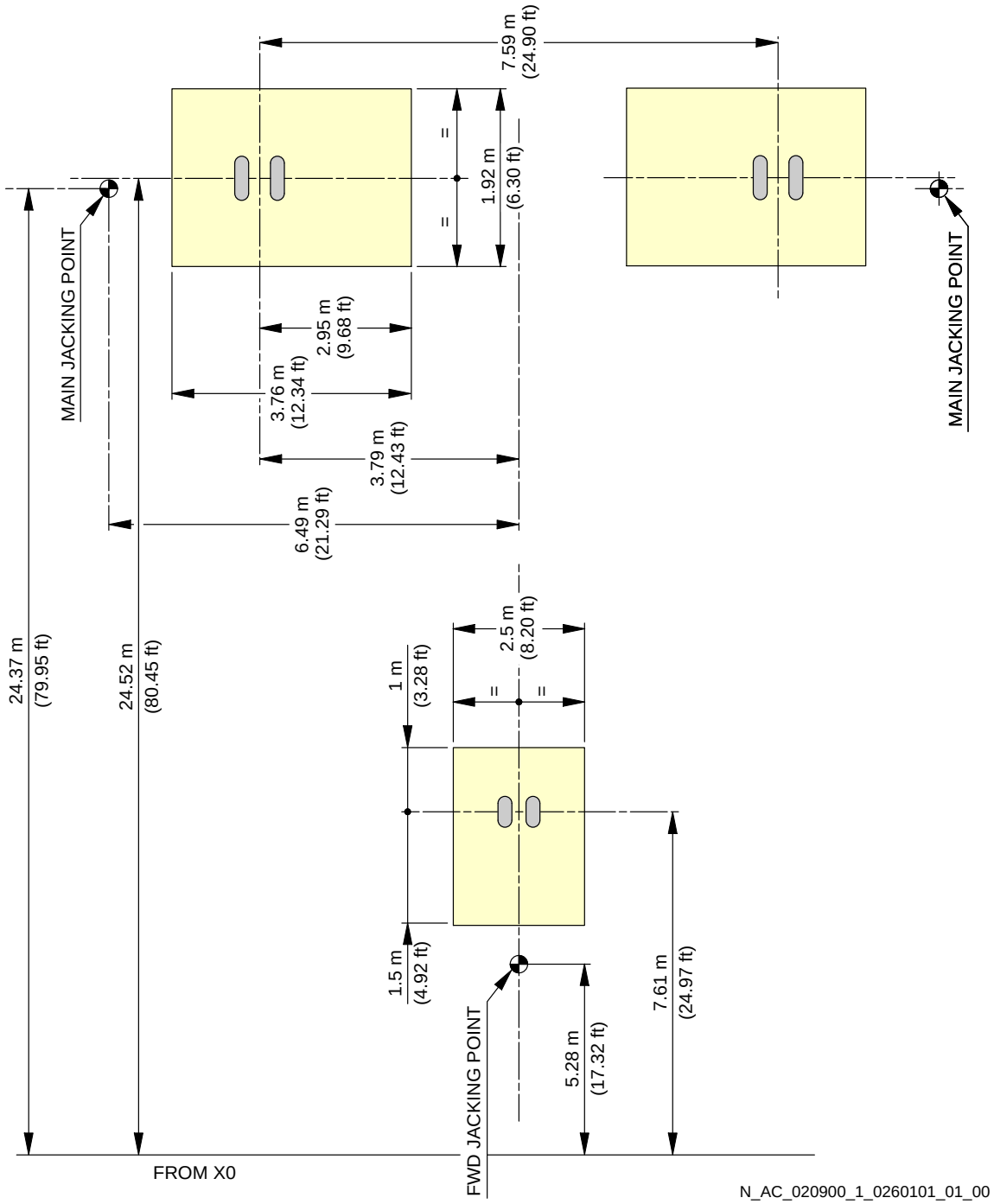

Landing Gear Maintenance Pits
Maintenance Pit Envelopes
FIGURE-2-9-0-991-026-A01

**ON A/C A321-100 A321-200 A321neo A321neo-XLR

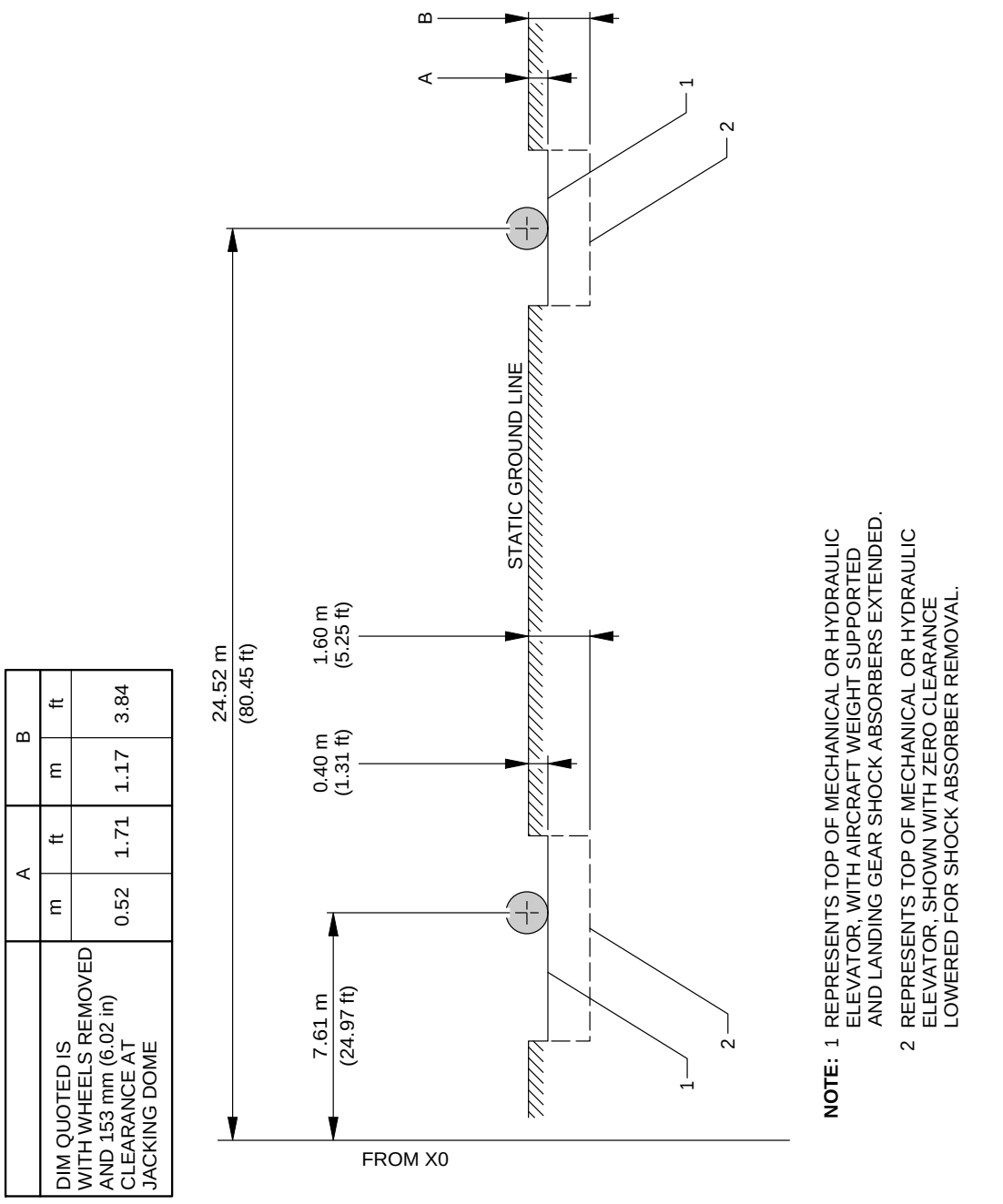

	A		B	
	m	ft	m	ft
DIM QUOTED IS WITH WHEELS REMOVED AND 153 mm (6.02 in) CLEARANCE AT JACKING DOME	0.52	1.71	1.17	3.84

N_AC_020900_1_0270101_01_00

Landing Gear Maintenance Pits
Maintenance Pit Envelopes
FIGURE-2-9-0-991-027-A01

2-10-0 Exterior Lighting

****ON A/C A321-100 A321-200 A321neo A321neo-XLR**

Exterior Lighting

1. General

This section provides the location of the aircraft exterior lighting.

EXTERIOR LIGHTING	
ITEM	DESCRIPTION
1	RIGHT NAVIGATION LIGHT (GREEN)
2	TAIL NAVIGATION LIGHT (WHITE)
3	LEFT NAVIGATION LIGHT (RED)
4	RETRACTABLE LANDING LIGHT
5	RUNWAY TURN OFF LIGHT
6	TAXI LIGHT
7	TAKE-OFF LIGHT
8	LOGO LIGHT
9	UPPER ANTI-COLLISION LIGHT/BEACON (RED)
10	LOWER ANTI-COLLISION LIGHT/BEACON (RED)
11	WING STROBE LIGHT (HIGH INTENSITY, WHITE)
12	TAIL STROBE LIGHT (HIGH INTENSITY, WHITE)
13	WING/ENGINE SCAN LIGHT
14	WHEEL WELL LIGHT (DOME)
15	CARGO COMPARTMENT FLOOD LIGHT
16	MULTIFUNCTIONAL RUNWAY LIGHT (MFRL) The MFRL is a set of LEDs lights that are installed on the aircraft which includes the retractable landing light and the complete set of NLG lights (two runway turn-off lights, one taxi light and one take-off light).

**ON A/C A321-100 A321-200 A321neo A321neo-XLR

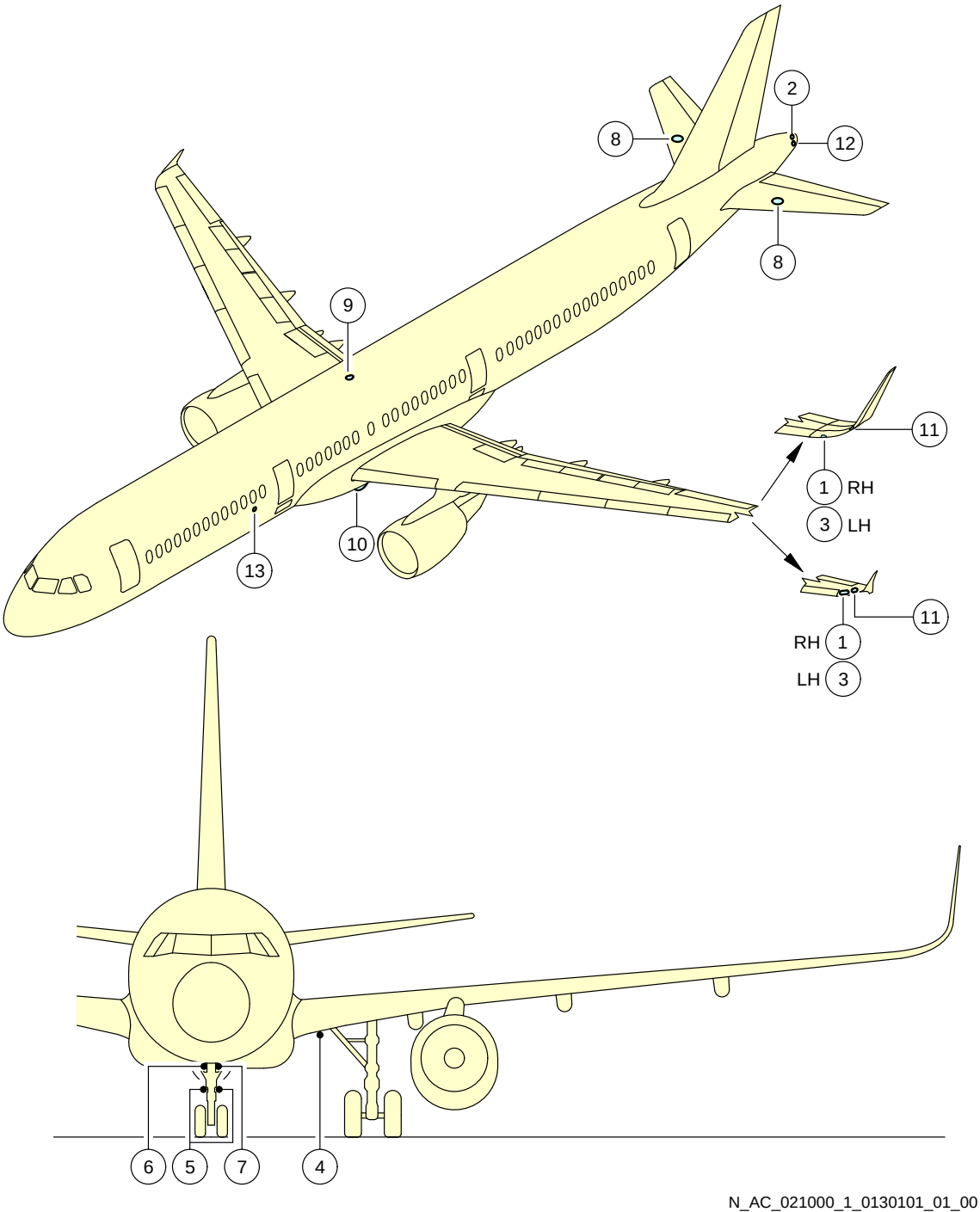

Exterior Lighting
FIGURE-2-10-0-991-013-A01

**ON A/C A321neo A321neo-XLR

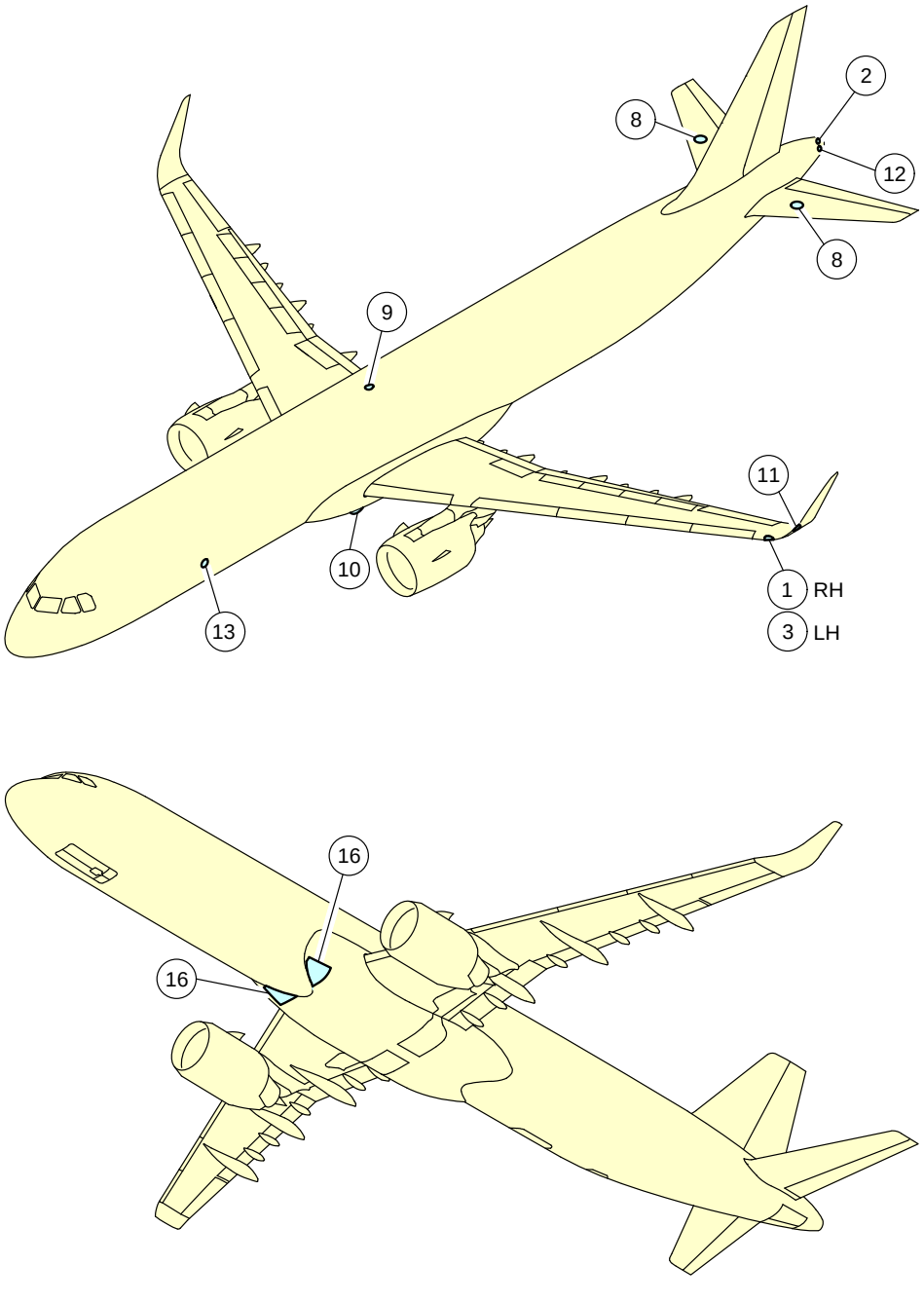

N_AC_021000_1_0220101_01_00

Exterior Lighting
FIGURE-2-10-0-991-022-A01

**ON A/C A321-100 A321-200 A321neo A321neo-XLR

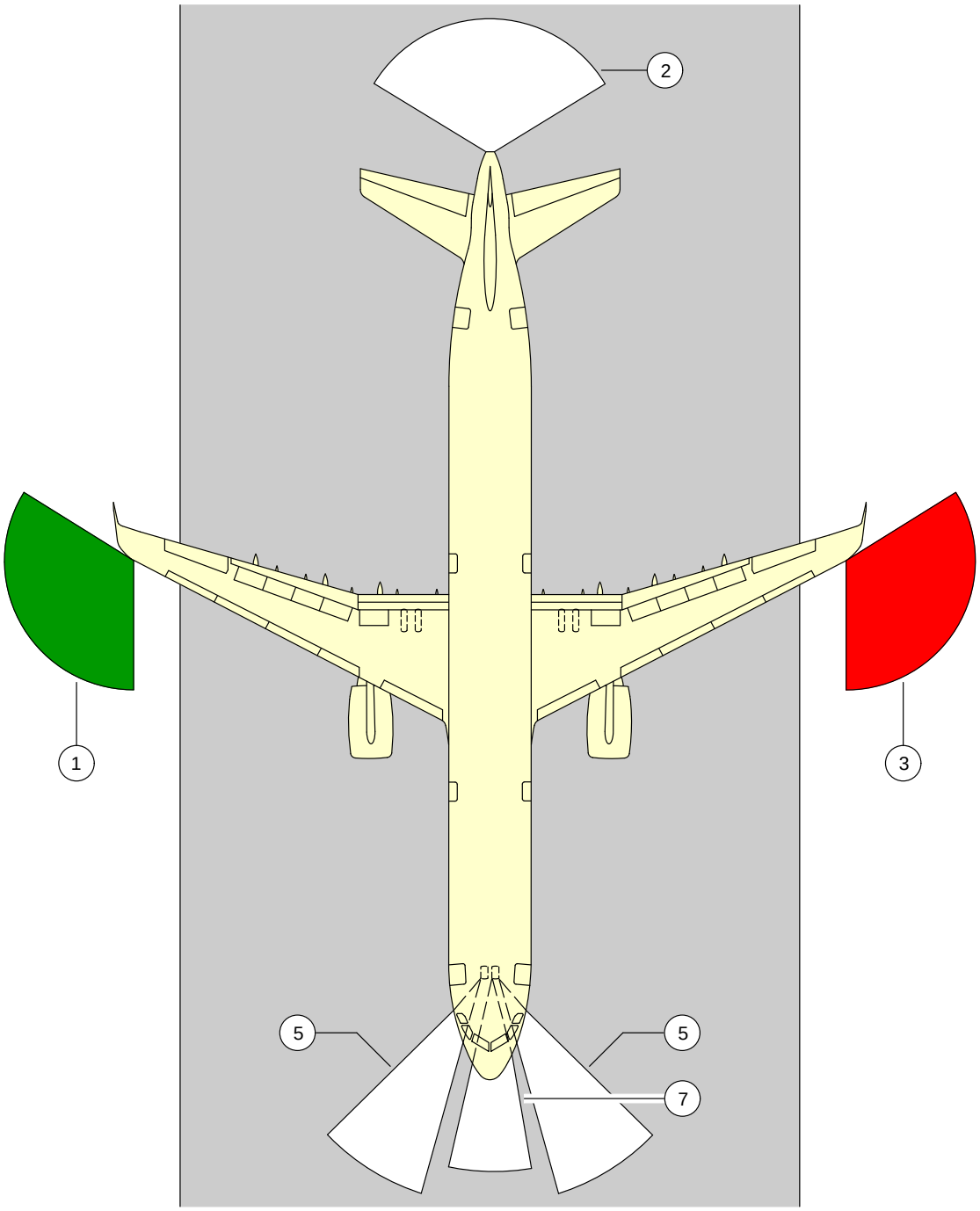

N_AC_021000_1_0140101_01_00

Exterior Lighting
FIGURE-2-10-0-991-014-A01

**ON A/C A321-100 A321-200 A321neo A321neo-XLR

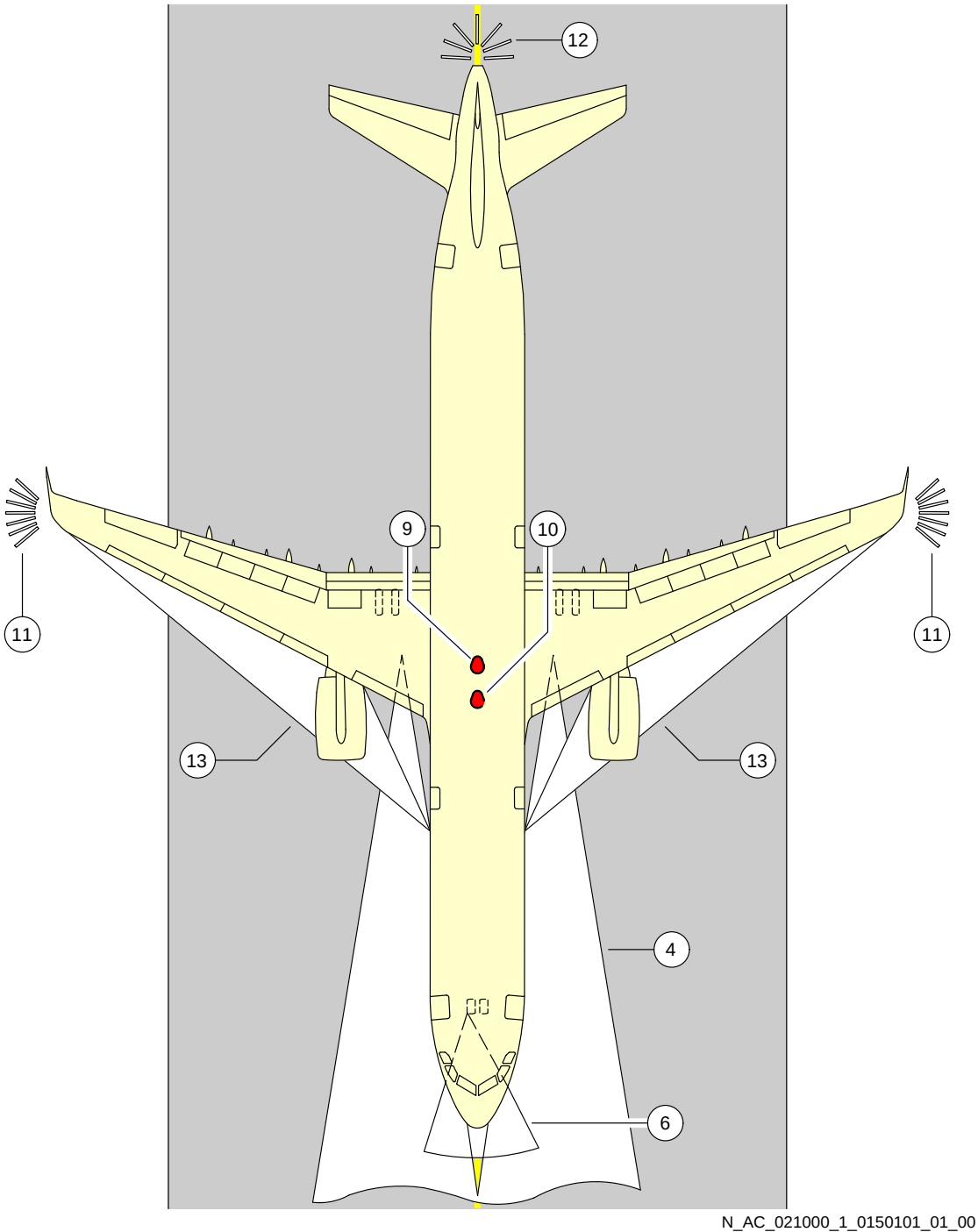

Exterior Lighting
FIGURE-2-10-0-991-015-A01

**ON A/C A321-100 A321-200 A321neo A321neo-XLR

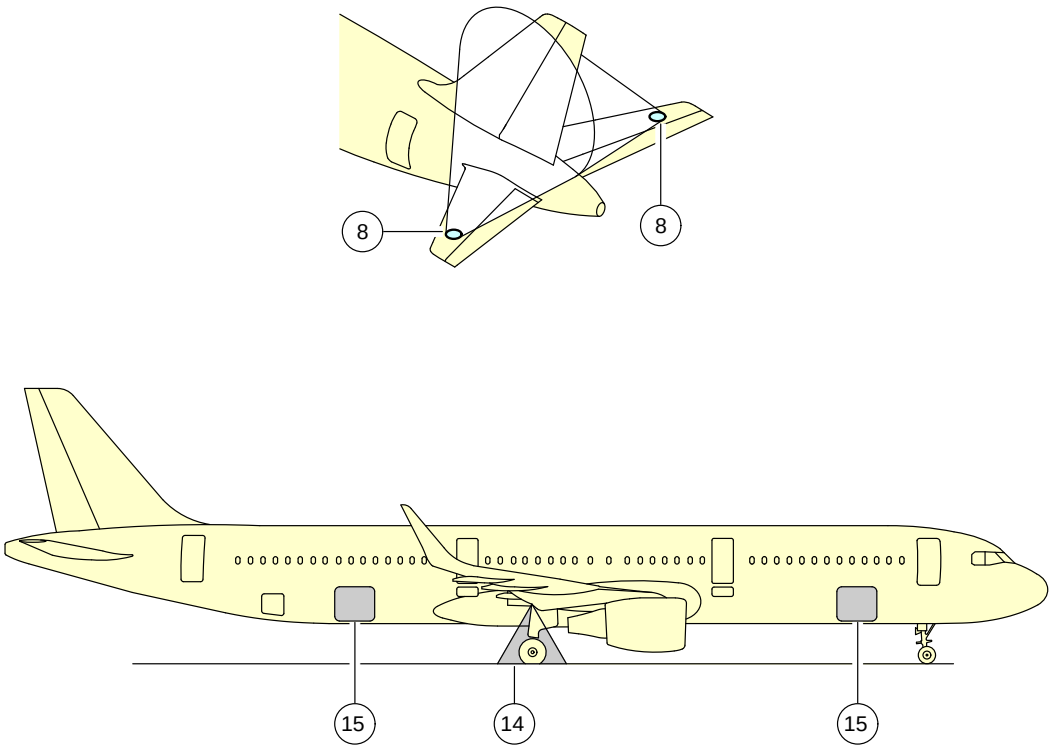

Exterior Lighting
FIGURE-2-10-0-991-020-A01

**ON A/C A321neo A321neo-XLR

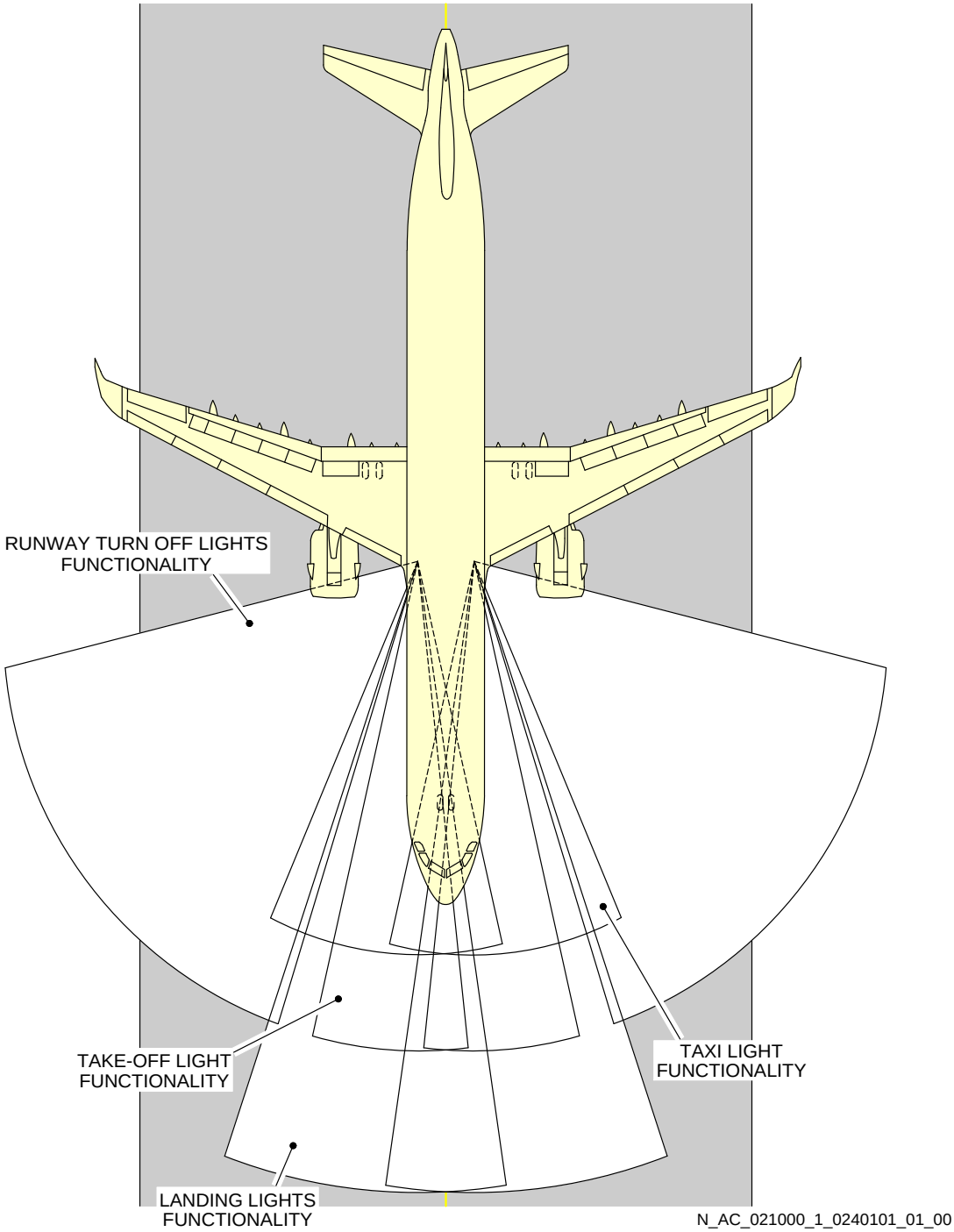

Exterior Lighting
FIGURE-2-10-0-991-024-A01

2-11-0 Antennas and Probes Location

****ON A/C A321-100 A321-200 A321neo A321neo-XLR**

Antennas and Probes Location

1. This section gives the location of antennas and probes.

**ON A/C A321-100 A321-200 A321neo A321neo-XLR

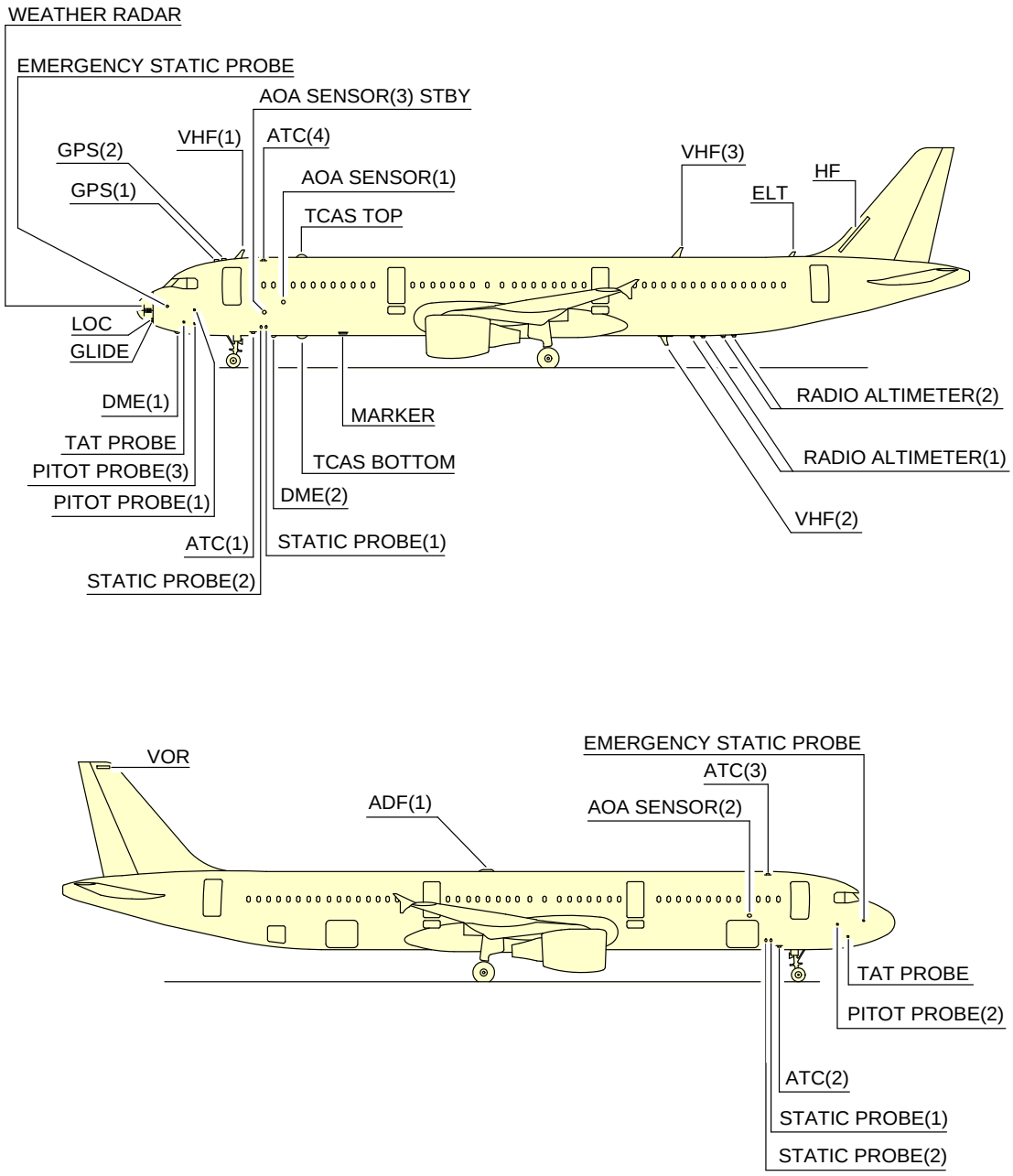

NOTE: DEPENDING ON AIRCRAFT CONFIGURATION

N_AC_021100_1_0040101_01_00

Antennas and Probes
Location
FIGURE-2-11-0-991-004-A01

2-12-0 Power Plant

****ON A/C A321-100 A321-200 A321neo A321neo-XLR**

Auxiliary Power Unit

1. General

   The APU is installed at the rear part of the fuselage in the tail cone. An air intake system with a flap-type door is installed in front of the APU compartment. The exhaust gases pass overboard at the end of the fuselage cone.

2. Controls and Indication

   The primary APU controls and indications are installed on the overhead panel, on the center pedestal and on the center instrument panel. Additionally, an external APU panel is installed on the nose landing gear to initiate an APU emergency shutdown.

**ON A/C A321-100 A321-200 A321neo A321neo-XLR

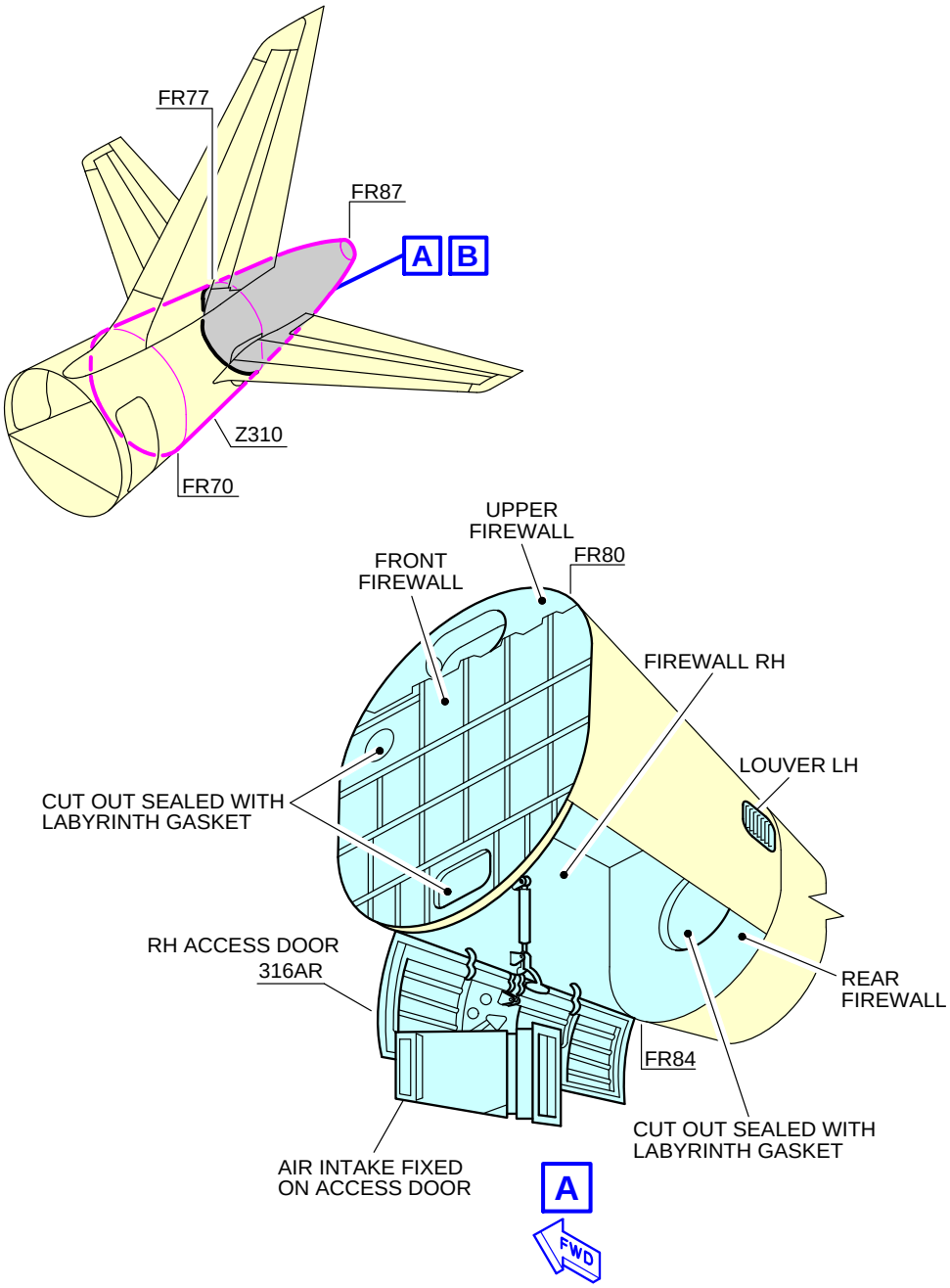

NOTE:
LH ACCESS DOOR 315AL NOT SHOWN FOR CLARITY.

N_AC_021200_1_0070101_01_01

Auxiliary Power Unit
Access Doors
FIGURE-2-12-0-991-007-A01

**ON A/C A321-100 A321-200 A321neo A321neo-XLR

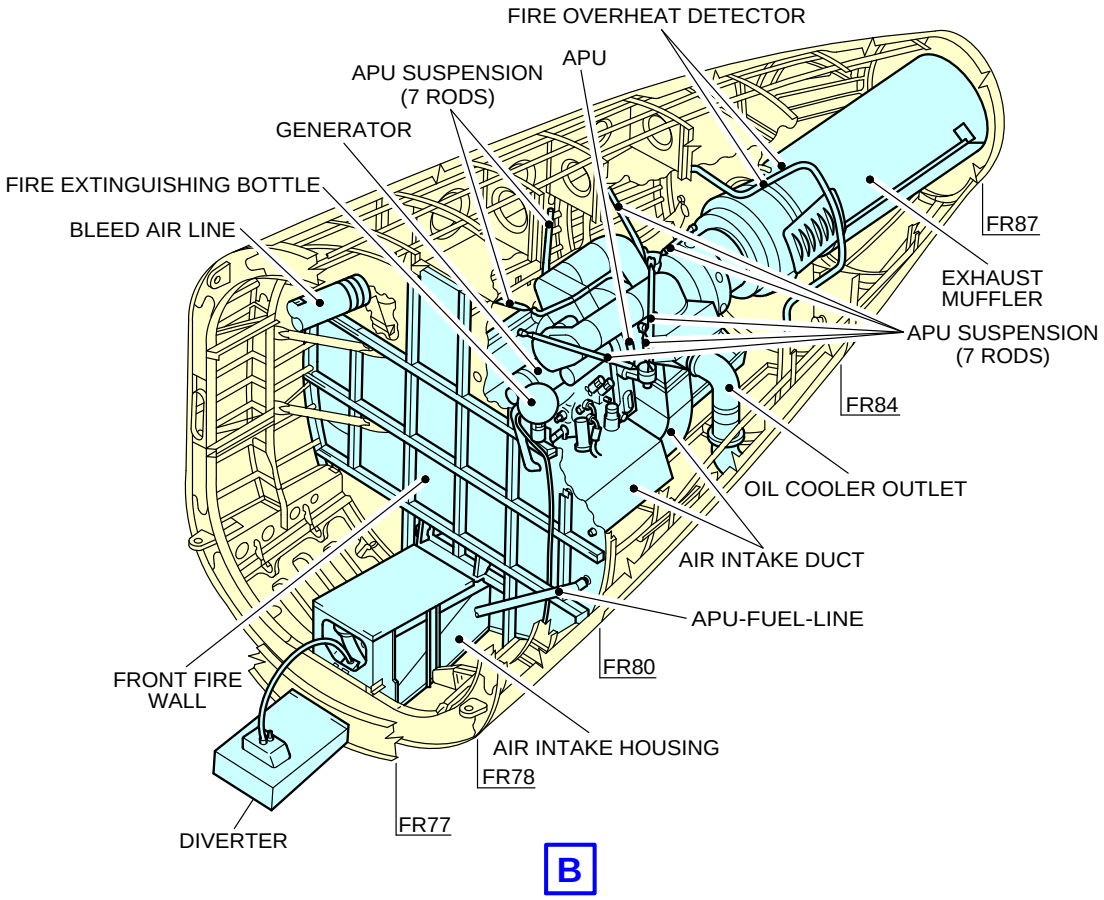

N_AC_021200_1_0080101_01_01

Auxiliary Power Unit
General Layout
FIGURE-2-12-0-991-008-A01

****ON A/C A321-100 A321-200 A321neo A321neo-XLR**

Engine and Nacelle

****ON A/C A321-100 A321-200**

1. Engine and Nacelle - CFM56 Engine

A. Engine

The aircraft has two CFM International CFM56 engines that supply power to the aircraft.
The engines are turbofan engines that have:

- A high bypass ratio,
- A Full Authority Digital Engine Control (FADEC),
- A fuel system,
- An oil system,
- An air system,
- A thrust reverser system,
- An ignition system and a start system.

The engine has:
Two compressor turbine assemblies:

- The Low Pressure (LP) compressor turbine assembly,
- The High Pressure (HP) compressor turbine assembly.

Each turbine operates its associated compressor via a shaft.

- One accessory gearbox,
- One combustion chamber.

The engine operates as follows:

(1) The LP compressor, compresses the air.

(2) Then, the air is divided into two flows:
- Most of the air flows out of the core engine, and provides most of the engine thrust.
- The remaining air enters the core engine.

(3) The HP compressor compresses the air that enters the core engine.

(4) The fuel is added to and mixed with the compressed air of the core engine. The mixture is ignited in the combustion chamber.

(5) The gas that results from combustion drives the HP and the LP turbines.
- The rotation speed of the fan provides the N1 engine parameter.
- The rotation speed of the HP rotor provides the N2 engine parameter.
- The N1 and N2 engine parameters appear on the Engine/Warning Display (E/WD).

- The N1 and N2 engine parameters are current rotation speeds displayed in percentage.

The FADEC uses:

- The N1 engine parameter to compute the applicable engine thrust,
- The N1 and N2 engine parameters for engine control and monitoring.

B. Nacelle

The cowls enclose the periphery of the engine so as to form the engine nacelle. Each engine is housed in a nacelle suspended from a pylon attached below the wing.
The nacelle installation is designed to provide cooling and ventilation air for engine accessories mounted along the fan and core casing. The nacelle provides:

- Protection for the engine and the accessories
- Airflow around the engine during its operation
- Lighting protection
- HIRF and EMI attenuation.

2. Engine and Nacelle - IAE V2500 Engine

A. Engine

The aircraft has two International Aero Engines V2500 engines that supply power to the aircraft.
The engines are turbofan engines that have:

- A high bypass ratio,
- A Full Authority Digital Engine Control (FADEC),
- A fuel system,
- An oil system,
- An air system,
- A thrust reverser system,
- An ignition system and a start system.

The engine has:
Two compressor turbine assemblies:

- The Low Pressure (LP) compressor turbine assembly,
- The High Pressure (HP) compressor turbine assembly.

Each turbine operates its associated compressor via a shaft.

- One accessory gearbox,
- One combustion chamber.

The engine operates as follows:

(1) The LP compressor, compresses the air.

(2) Then, the air is divided into two flows:

- Most of the air flows out of the core engine, and provides most of the engine thrust.

- The remaining air enters the core engine.

(3) The HP compressor compresses the air that enters the core engine.

(4) The fuel is added to and mixed with the compressed air of the core engine. The mixture is ignited in the combustion chamber.

(5) The gas that results from combustion drives the HP and the LP turbines.
- The rotation speed of the fan provides the N1 engine parameter.
- The rotation speed of the HP rotor provides the N2 engine parameter.
- The N1 and N2 engine parameters appear on the Engine/Warning Display (E/WD).
- The N1 and N2 engine parameters are current rotation speeds displayed in percentage.

The FADEC uses:
- The N1 engine parameter to compute the applicable engine thrust,
- The N1 and N2 engine parameters for engine control and monitoring.

B. Nacelle

The cowls enclose the periphery of the engine so as to form the engine nacelle. Each engine is housed in a nacelle suspended from a pylon attached below the wing.
The nacelle installation is designed to provide cooling and ventilation air for engine accessories mounted along the fan and core casing. The nacelle provides:
- Protection for the engine and the accessories
- Airflow around the engine during its operation
- Lighting protection
- HIRF and EMI attenuation.

****ON A/C A321neo A321neo-XLR**

3. Engine and Nacelle - CFM LEAP-1A Engine

A. Engine

The aircraft has two CFM International LEAP-1A engines that supply power to the aircraft.
The engines are turbofan engines that have:
- A high bypass ratio,
- A Full Authority Digital Engine Control (FADEC),
- A fuel system,
- An oil system,
- An air system,
- A thrust reverser system,
- An ignition system and a start system.

The engine has:
Two compressor turbine assemblies:
- The Low Pressure (LP) compressor turbine assembly,

- The High Pressure (HP) compressor turbine assembly.

Each turbine operates its associated compressor via a shaft.

- One accessory gearbox,
- One combustion chamber.

The engine operates as follows:

(1) The LP compressor, compresses the air.

(2) Then, the air is divided into two flows:
- Most of the air flows out of the core engine, and provides most of the engine thrust.
- The remaining air enters the core engine.

(3) The HP compressor compresses the air that enters the core engine.

(4) The fuel is added to and mixed with the compressed air of the core engine. The mixture is ignited in the combustion chamber.

(5) The gas that results from combustion drives the HP and the LP turbines.
- The rotation speed of the fan provides the N1 engine parameter.
- The rotation speed of the HP rotor provides the N2 engine parameter.
- The N1 and N2 engine parameters appear on the Engine/Warning Display (E/WD).
- The N1 and N2 engine parameters are current rotation speeds displayed in percentage.

The FADEC uses:
- The N1 engine parameter to compute the applicable engine thrust,
- The N1 and N2 engine parameters for engine control and monitoring.

B. Nacelle

The cowls enclose the periphery of the engine so as to form the engine nacelle. Each engine is housed in a nacelle suspended from a pylon attached below the wing.
The nacelle installation is designed to provide cooling and ventilation air for engine accessories mounted along the fan and core casing. The nacelle provides:

- Protection for the engine and the accessories
- Airflow around the engine during its operation
- Lighting protection
- HIRF and EMI attenuation.

4. Engine and Nacelle - PW1100G Engine

A. Engine

The aircraft has two Pratt & Whitney's Pure Power PW1100G engines that supply power to the aircraft.
The engines are turbofan engines that have:

- A high bypass ratio,
- A Full Authority Digital Engine Control (FADEC),
- A fuel system,
- An oil system,
- An air system,
- A thrust reverser system,
- An ignition system and a start system.

The engine has:
Two compressor turbine assemblies:
- The Low Pressure (LP) compressor turbine assembly,
- The High Pressure (HP) compressor turbine assembly.

Each turbine operates its associated compressor via a shaft.
- One accessory gearbox,
- One combustion chamber.

The engine operates as follows:

(1) The LP compressor, compresses the air.

(2) Then, the air is divided into two flows:
- Most of the air flows out of the core engine, and provides most of the engine thrust.
- The remaining air enters the core engine.

(3) The HP compressor compresses the air that enters the core engine.

(4) The fuel is added to and mixed with the compressed air of the core engine. The mixture is ignited in the combustion chamber.

(5) The gas that results from combustion drives the HP and the LP turbines.
- The rotation speed of the fan provides the N1 engine parameter.
- The rotation speed of the HP rotor provides the N2 engine parameter.
- The N1 and N2 engine parameters appear on the Engine/Warning Display (E/WD).
- The N1 and N2 engine parameters are current rotation speeds displayed in percentage.

The FADEC uses:
- The N1 engine parameter to compute the applicable engine thrust,
- The N1 and N2 engine parameters for engine control and monitoring.

B. Nacelle

The cowls enclose the periphery of the engine so as to form the engine nacelle. Each engine is housed in a nacelle suspended from a pylon attached below the wing.
The nacelle installation is designed to provide cooling and ventilation air for engine accessories mounted along the fan and core casing. The nacelle provides:
- Protection for the engine and the accessories
- Airflow around the engine during its operation

- Lighting protection
- HIRF and EMI attenuation.

**ON A/C A321-100 A321-200

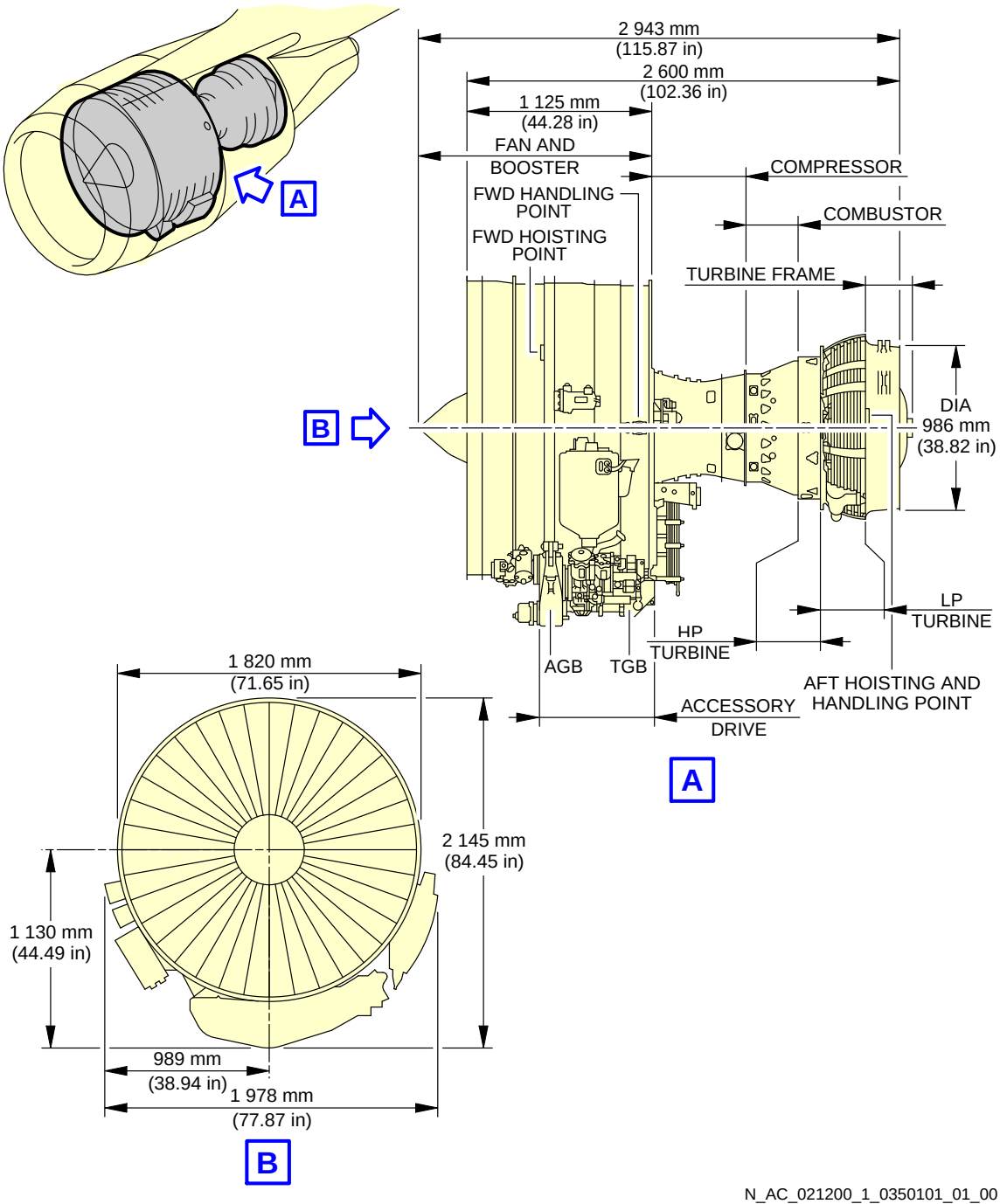

Power Plant Handling
Major Dimensions - CFM56 Series Engine
FIGURE-2-12-0-991-035-A01

**ON A/C A321-100 A321-200

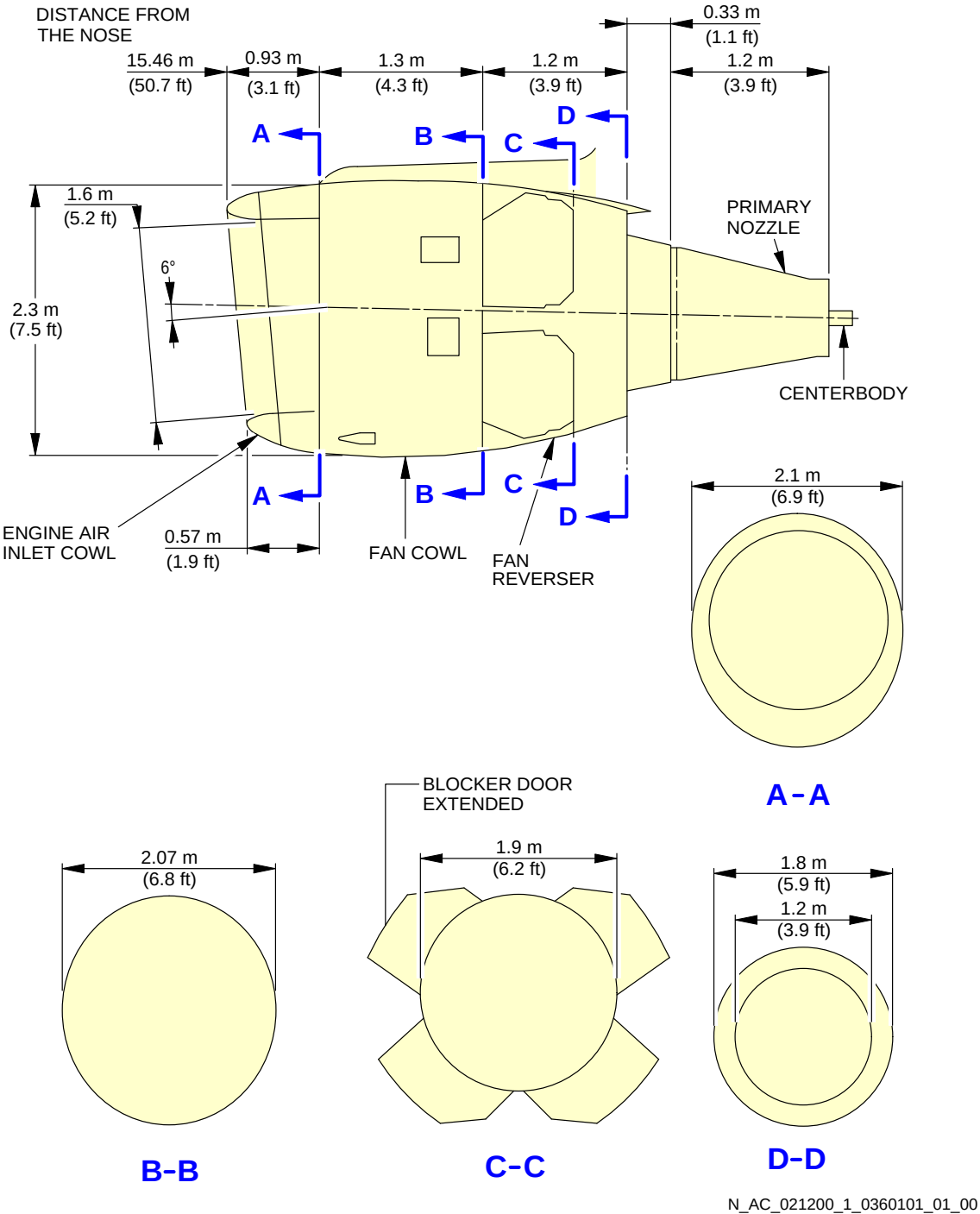

Power Plant Handling
Major Dimensions - CFM56 Series Engine
FIGURE-2-12-0-991-036-A01

****ON A/C A321-100 A321-200**

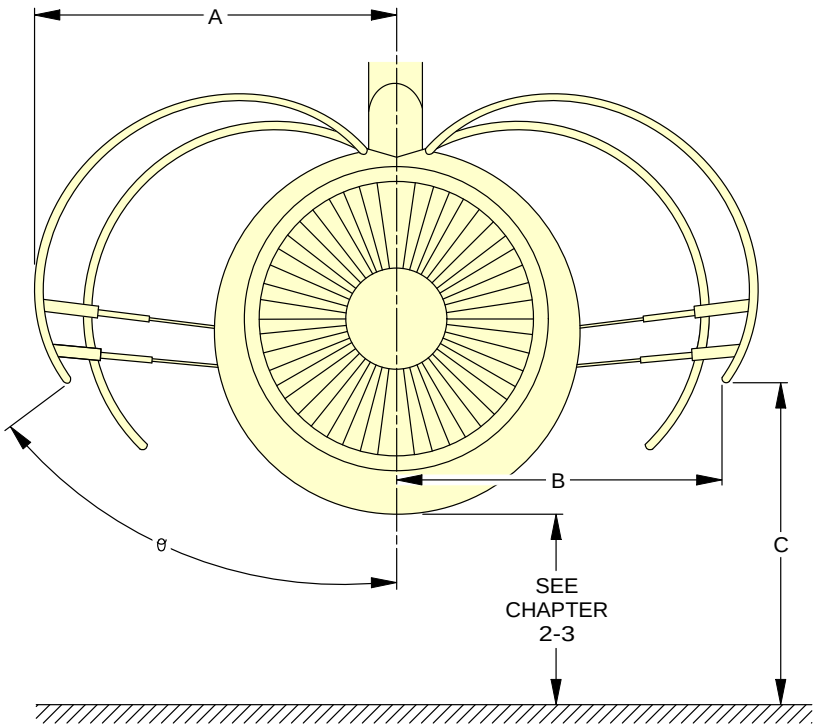

NOTE: APPROXIMATE DIMENSIONS.

m (ft)	θ	A	B	C
VIEW COWLING AFT	42°27	1.8 (5.9)	1.5 (4.9)	1.3 (4.3)
	55°15	2.0 (6.6)	1.8 (5.9)	1.7 (5.6)
VIEW COWLING FWD	40°40	1.8 (5.9)	1.4 (4.6)	1.3 (4.3)
	52°56	2.0 (6.6)	1.7 (5.6)	1.6 (5.2)

N_AC_021200_1_0370101_01_01

Power Plant Handling
Fan Cowls - CFM56 Series Engine
FIGURE-2-12-0-991-037-A01

****ON A/C A321-100 A321-200**

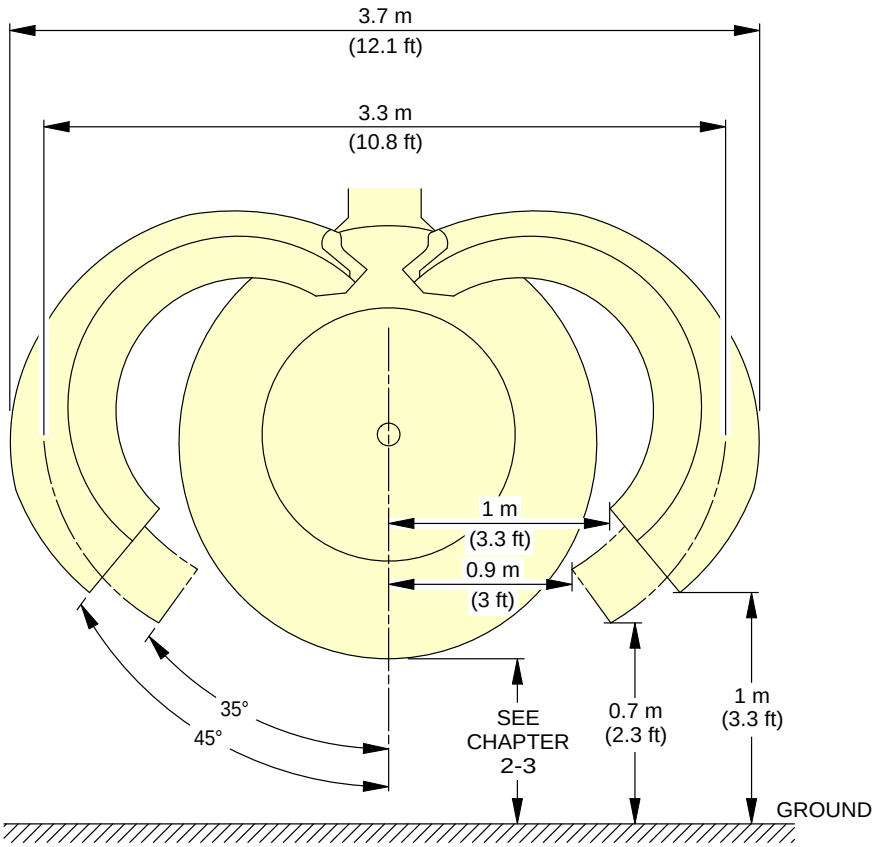

NOTE: APPROXIMATE DIMENSIONS.

CAUTION
DO NOT ACTUATE SLATS:
- WITH THRUST REVERSER COWLS 45° OPEN POSITION
- WITH BLOCKER DOORS OPEN AND THRUST REVERSER COWLS AT 35° AND 45° OPEN POSITION.

N_AC_021200_1_0380101_01_01

Power Plant Handling
Thrust Reverser Cowls - CFM56 Series Engine
FIGURE-2-12-0-991-038-A01

**ON A/C A321-100 A321-200

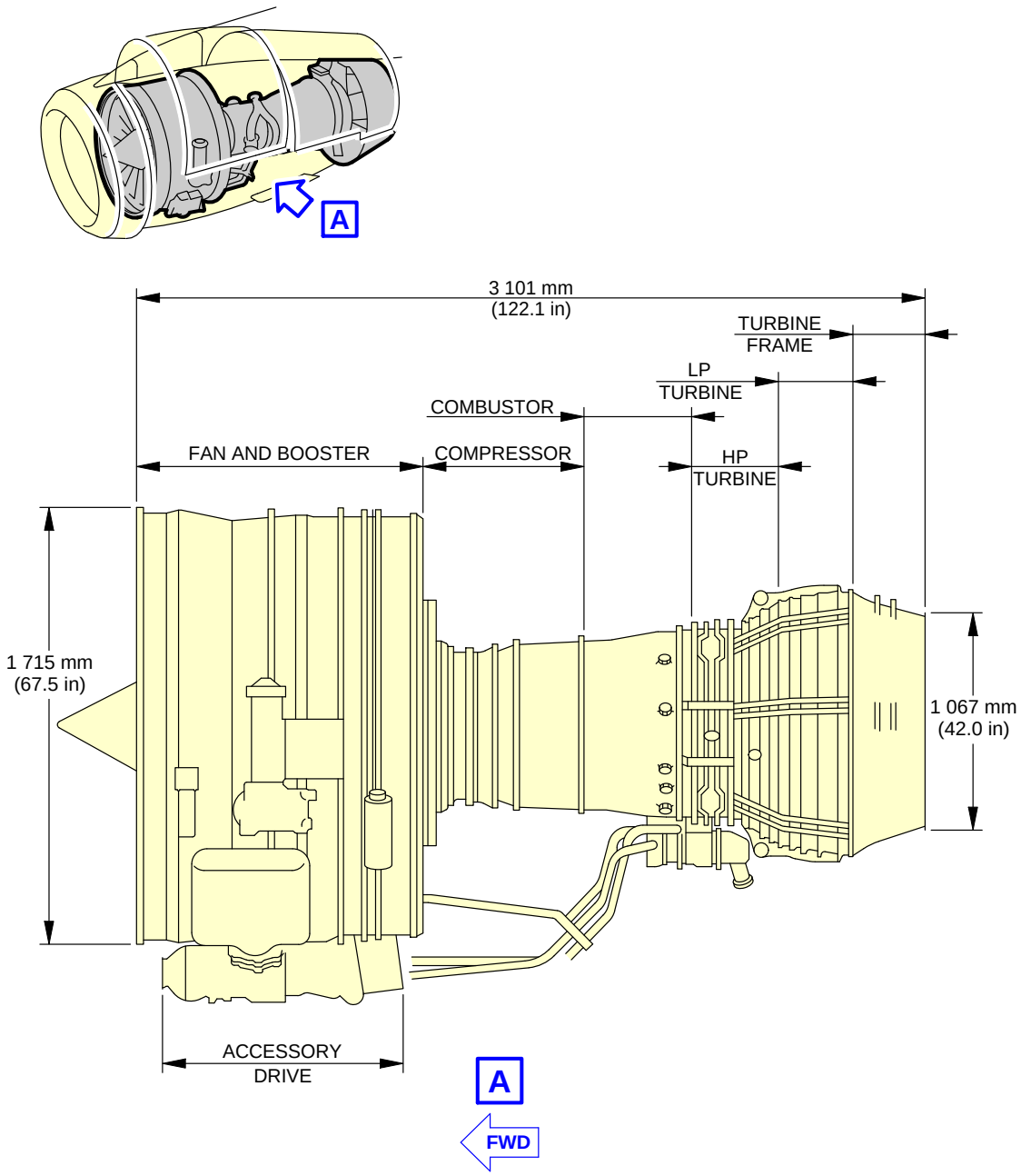

N_AC_021200_1_0390101_01_00

Power Plant Handling
Major Dimensions - IAE V2500 Series Engine
FIGURE-2-12-0-991-039-A01

****ON A/C A321-100 A321-200**

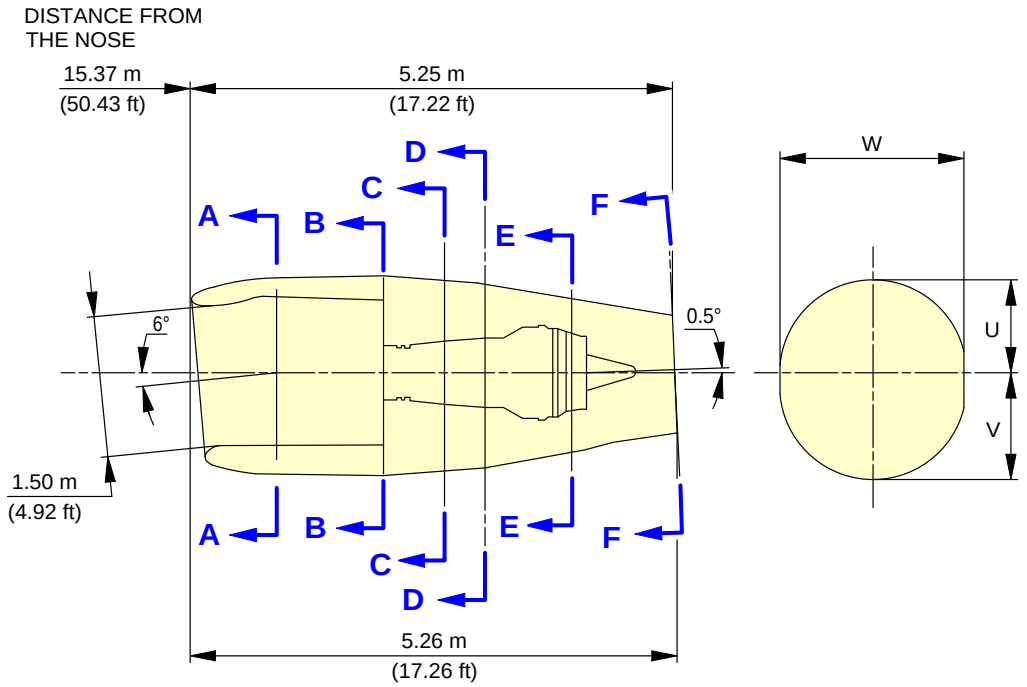

	W		U		V		PPS		AT COMPONENT
	m	ft	m	ft	m	ft	m	ft	
A-A	2.01	6.58	0.99	3.25	1.10	3.63	1.41	4.62	INLET ATTACH FLG
B-B	2.01	6.58	1.00	3.29	1.11	3.64	2.59	8.50	TORQUE BOX "V" BLADE
C-C	1.98	6.50	0.97	3.19	1.07	3.52	3.26	10.70	COMB. CHAMBER ENTRY FLG
D-D	1.93	6.32	0.93	3.06	1.03	3.39	3.63	11.90	COMB. CHAMBER EXIT FLG
E-E	1.64	5.38	0.78	2.57	0.86	2.83	4.60	15.10	TCH FLG TURB. EXIT CASE
F-F	1.24	4.07	0.60	1.96	0.64	2.11	----	----	AFT END CNA

NOTE: ALL SIZES GIVEN ON THIS ILLUSTRATION ARE APPROXIMATE

N_AC_021200_1_0400101_01_00

Power Plant Handling
Major Dimensions - IAE V2500 Series Engine
FIGURE-2-12-0-991-040-A01

****ON A/C A321-100 A321-200**

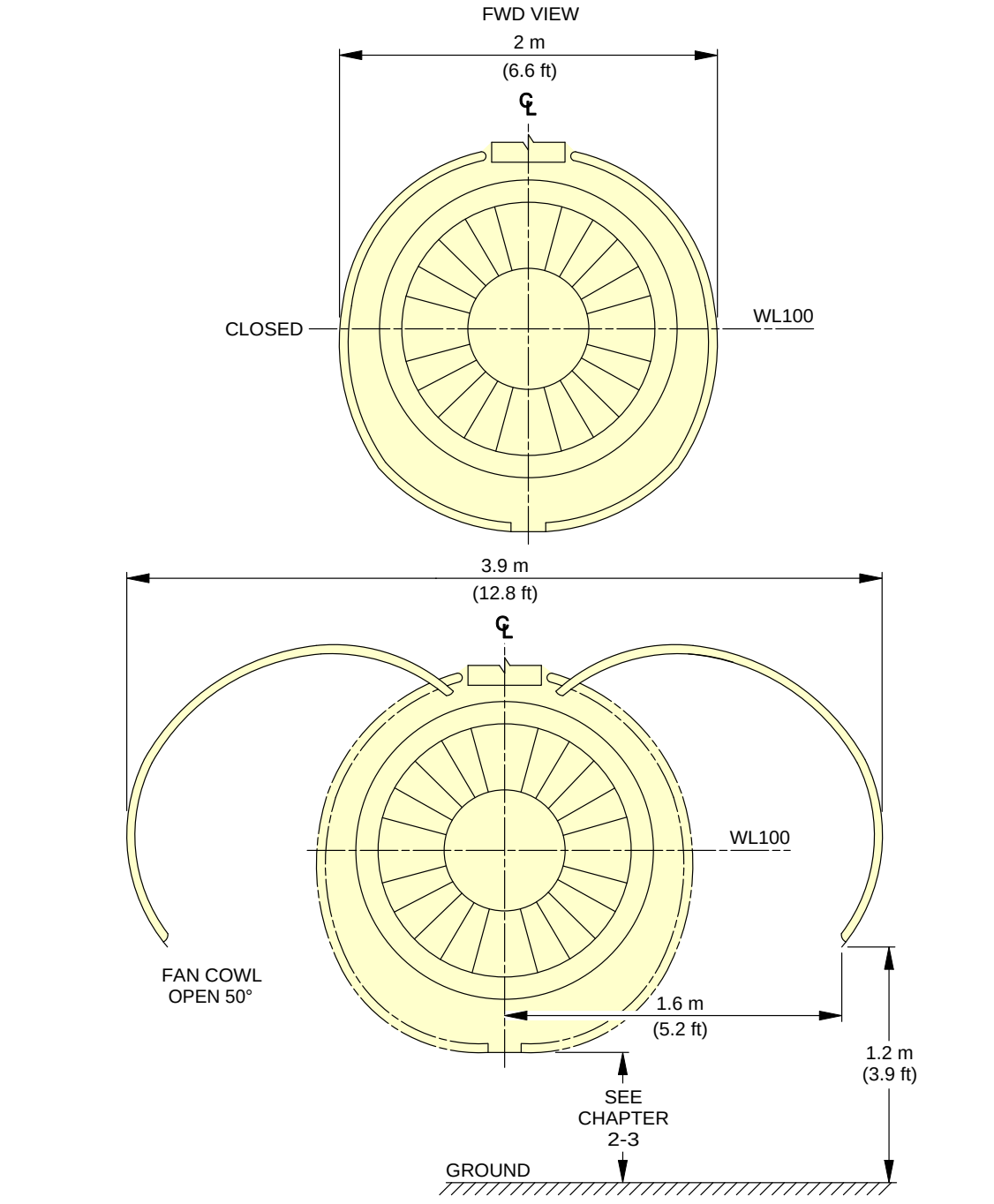

NOTE: APPROXIMATE DIMENSIONS.

N_AC_021200_1_0410101_01_01

Power Plant Handling
Fan Cowls - IAE V2500 Series Engine
FIGURE-2-12-0-991-041-A01

****ON A/C A321-100 A321-200**

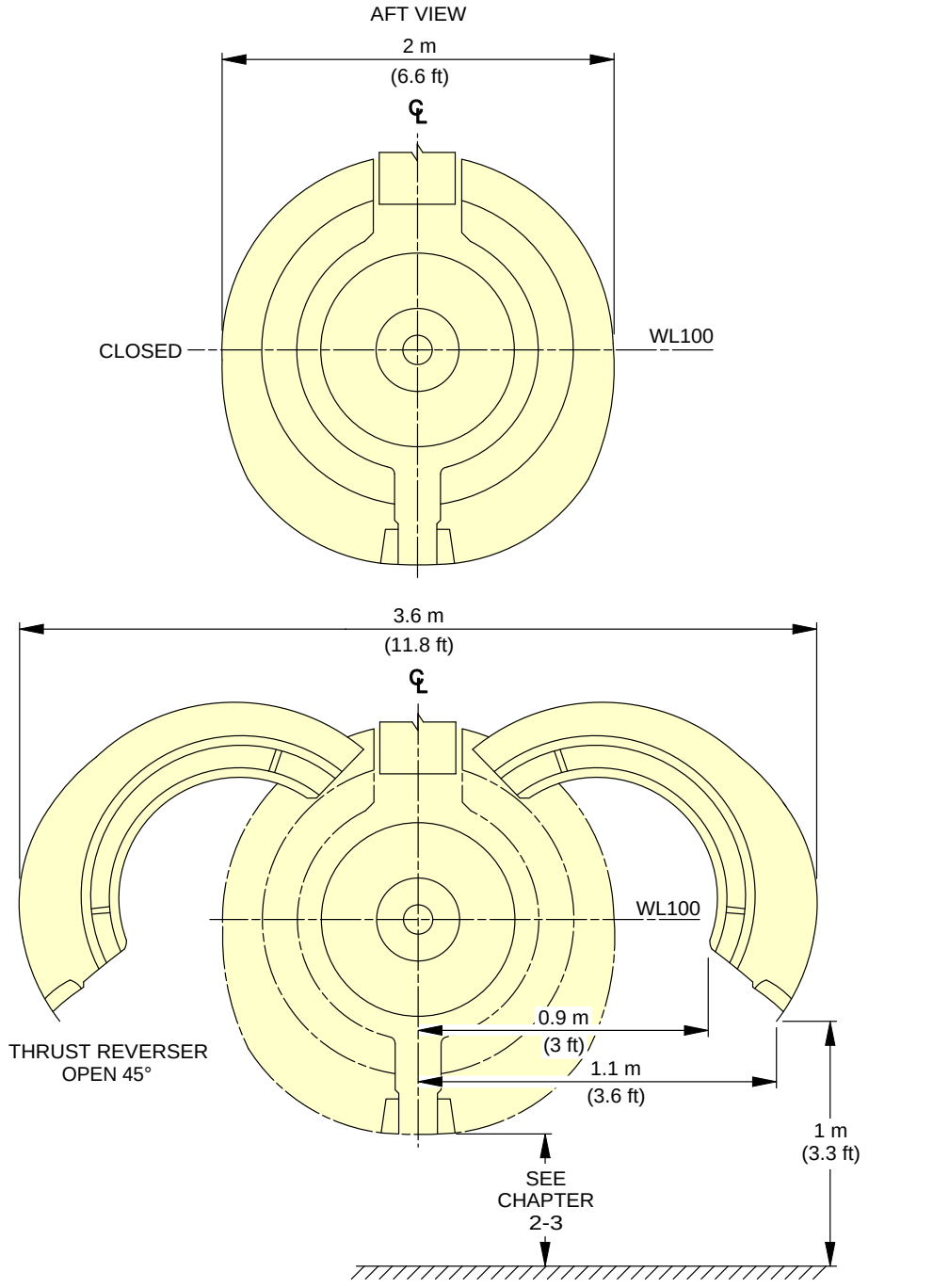

NOTE: APPROXIMATE DIMENSIONS.

N_AC_021200_1_0420101_01_01

Power Plant Handling
Thrust Reverser Halves - IAE V2500 Series Engine
FIGURE-2-12-0-991-042-A01

**ON A/C A321neo A321neo-XLR

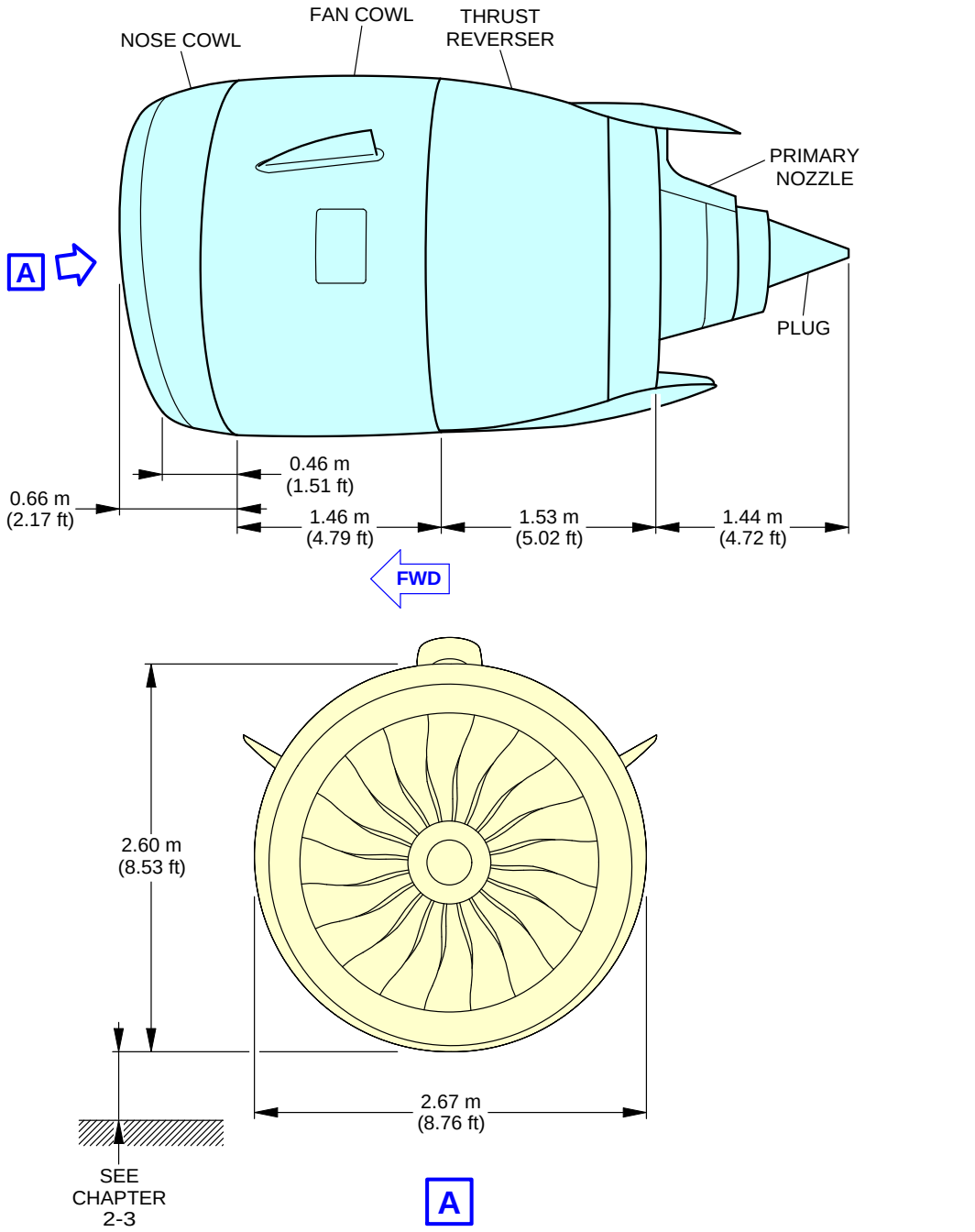

N_AC_021200_1_0490101_01_01

Power Plant Handling
Major Dimensions - PW 1100G Engine
FIGURE-2-12-0-991-049-A01

**ON A/C A321neo A321neo-XLR

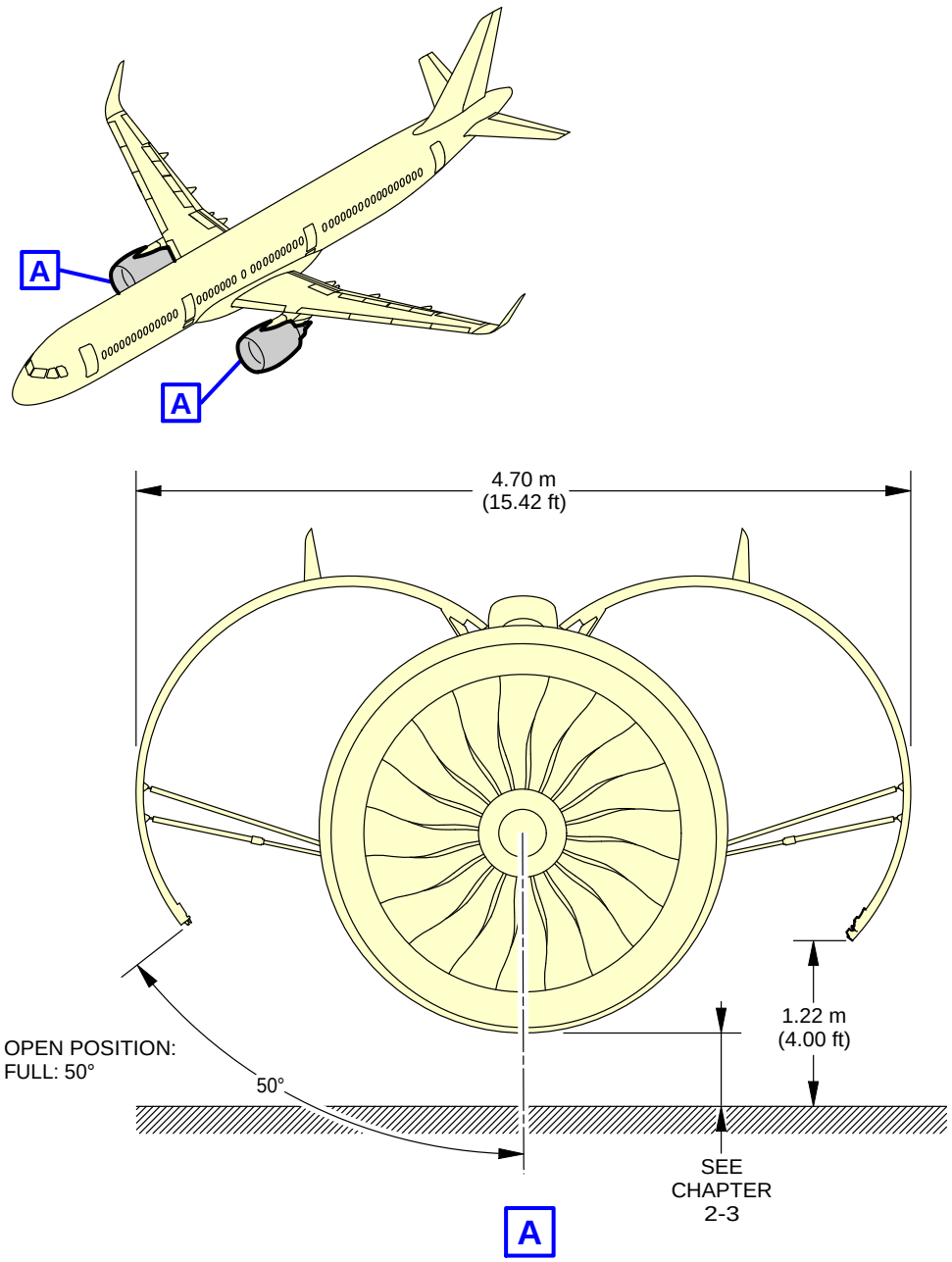

N_AC_021200_1_0500101_01_02

Power Plant Handling
Fan Cowls - PW 1100G Engine
FIGURE-2-12-0-991-050-A01

**ON A/C A321neo A321neo-XLR

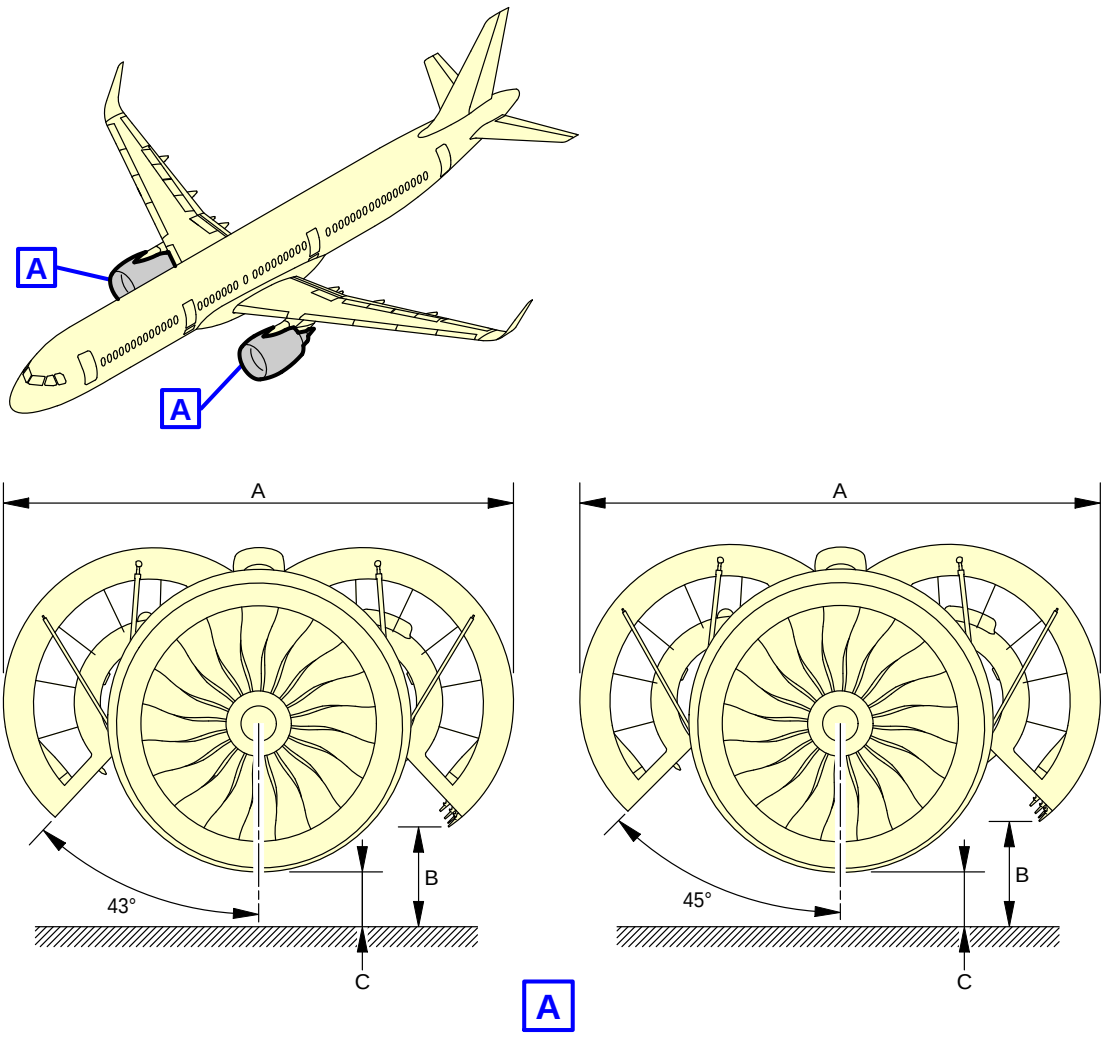

OPEN POSITION	A	B		C
		MIN.	MAX.	
43°	4.26 m (13.98 ft)	0.80 m (2.62 ft)	0.90 m (2.95 ft)	SEE AC SECTION 2-3-0
45°	4.33 m (14.21 ft)	0.84 m (2.76 ft)	0.95 m (3.12 ft)	

NOTE:
B AND C DEPENDING ON AIRCRAFT CONFIGURATION.

N_AC_021200_1_0510101_01_01

Power Plant Handling
Thrust Reverser Halves - PW 1100G Engine
FIGURE-2-12-0-991-051-A01

**ON A/C A321neo A321neo-XLR

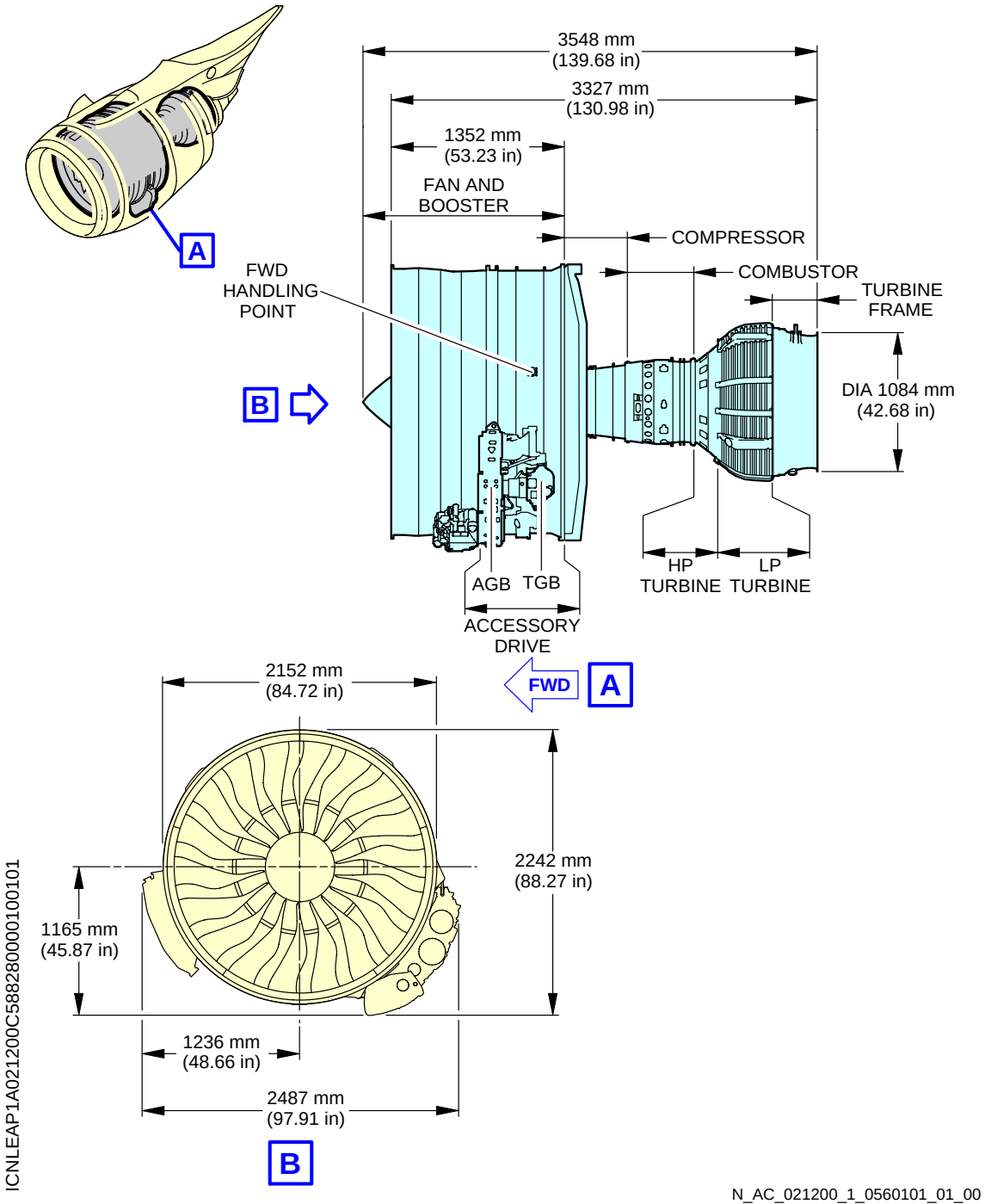

Power Plant Handling
Major Dimensions - CFM LEAP-1A Engine
FIGURE-2-12-0-991-056-A01

**ON A/C A321neo A321neo-XLR

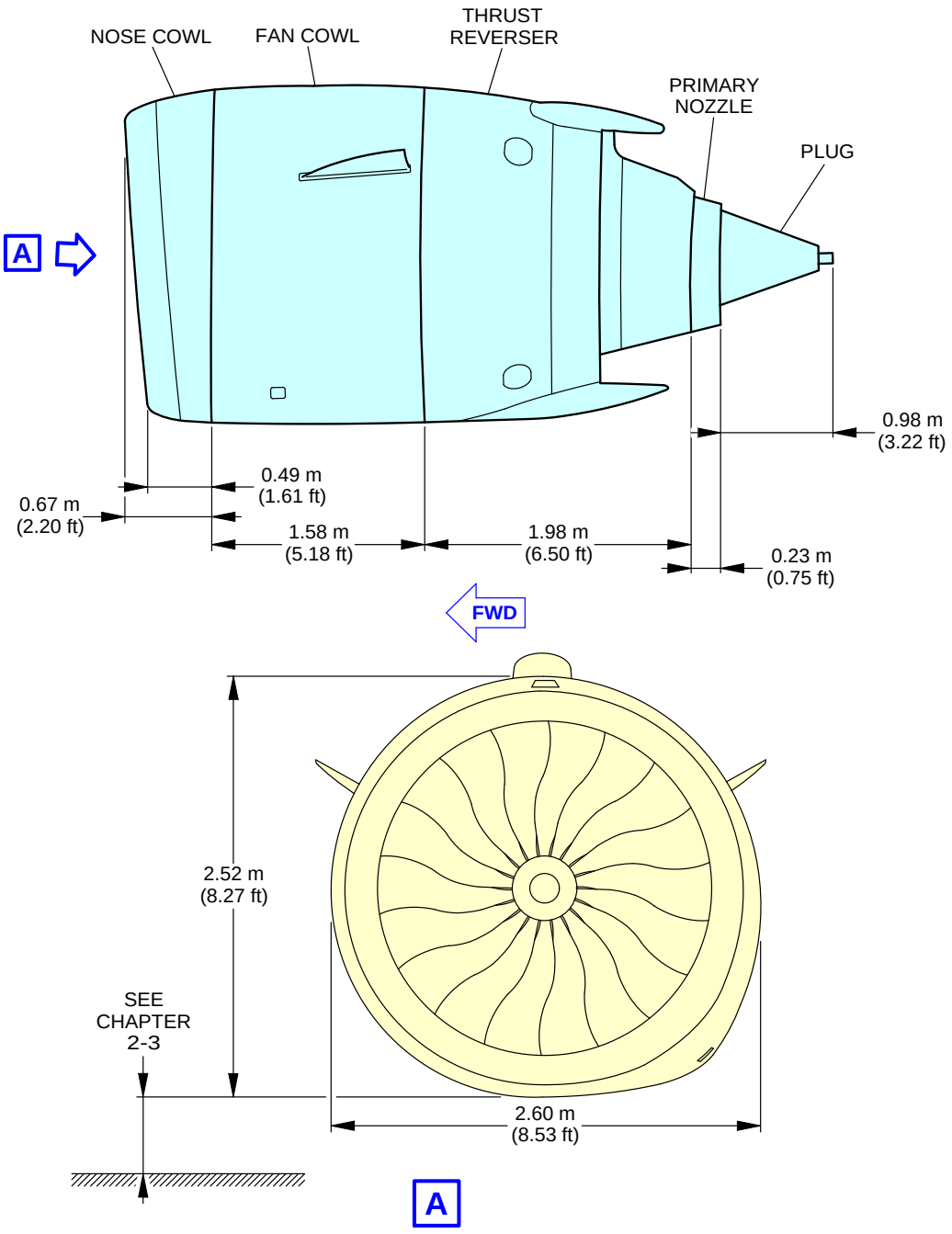

Power Plant Handling
Major Dimensions - CFM LEAP-1A Engine
FIGURE-2-12-0-991-057-A01

**ON A/C A321neo A321neo-XLR

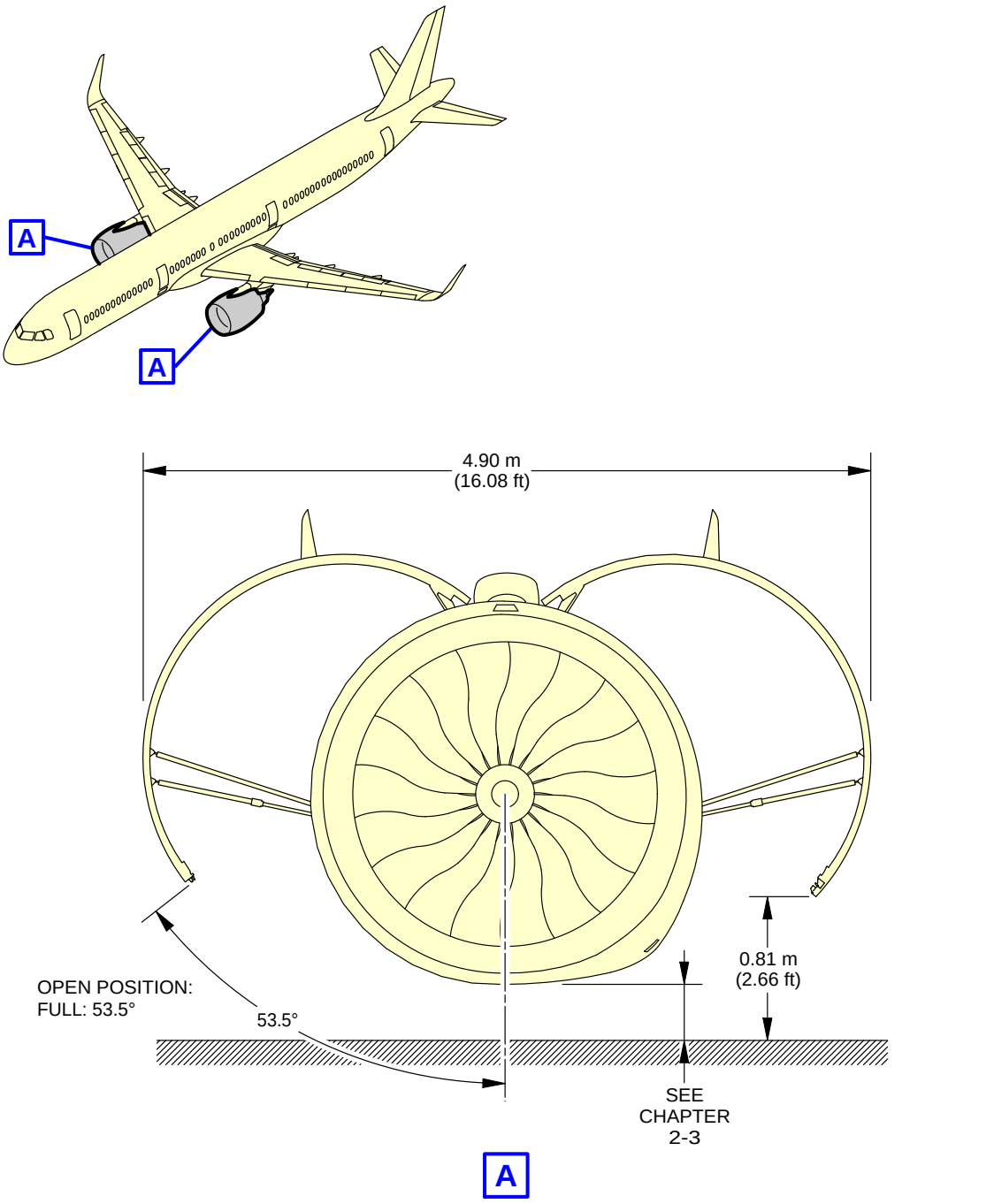

Power Plant Handling
Fan Cowls - CFM LEAP-1A Engine
FIGURE-2-12-0-991-058-A01

**ON A/C A321neo A321neo-XLR

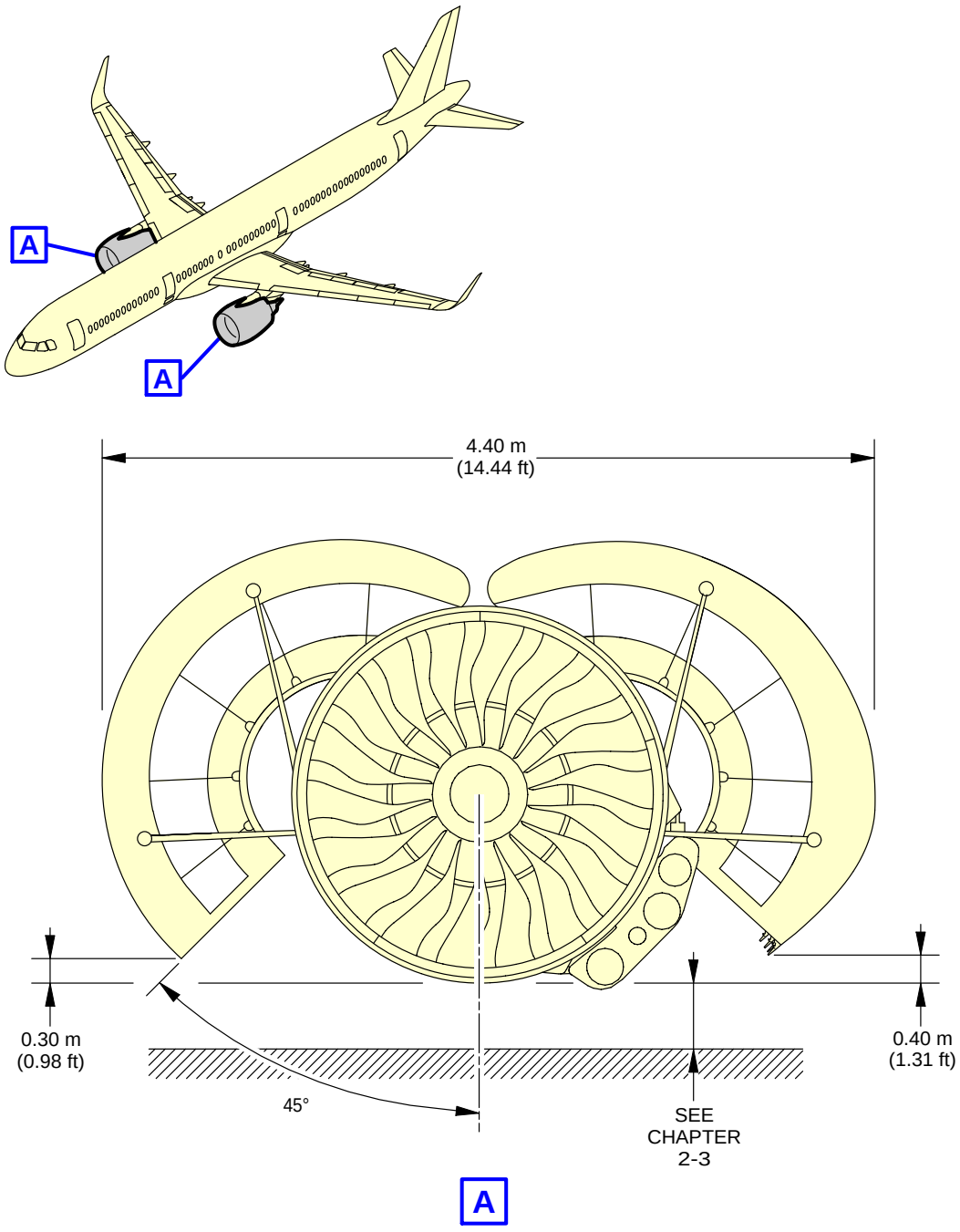

N_AC_021200_1_0590101_01_00

Power Plant Handling
Thrust Reverser Halves - CFM LEAP-1A Engine
FIGURE-2-12-0-991-059-A01

2-13-0 Leveling, Symmetry and Alignment

****ON A/C A321-100 A321-200 A321neo A321neo-XLR**

Leveling, Symmetry and Alignment

1. Quick Leveling

   There are three alternative procedures to level the aircraft:
   - Quick leveling procedure with Air Data/Inertial Reference Unit (ADIRU).
   - Quick leveling procedure with a spirit level in the passenger compartment.
   - Quick leveling procedure with a spirit level in the FWD cargo compartment.

2. Precise Leveling

   For precise leveling, it is necessary to install sighting rods in the receptacles located under the fuselage (points 11 and 12 for longitudinal leveling) and under the wings (points 2LH and 2RH for lateral leveling) and use a sighting tube. With the aircraft on jacks, adjust the jacks until the reference marks on the sighting rods are aligned in the sighting plane (aircraft level).

3. Symmetry and Alignment Check

   Possible deformation of the aircraft is measured by photogrammetry.

**ON A/C A321-100 A321-200 A321neo A321neo-XLR

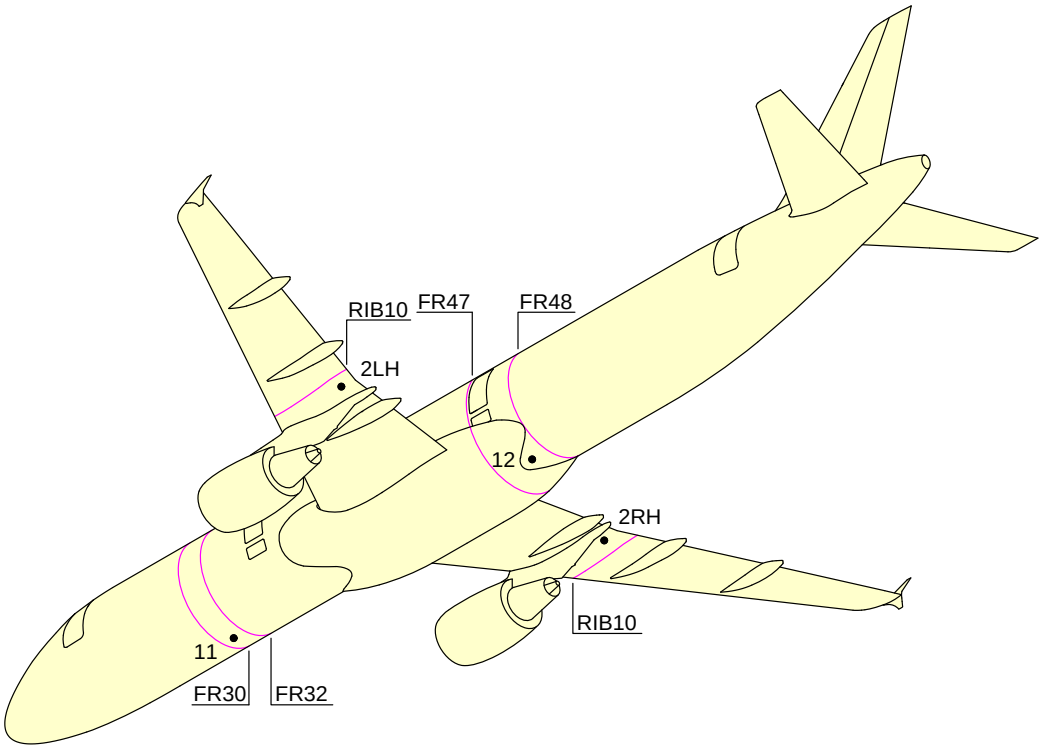

N_AC_021300_1_0050101_01_00

Location of the Leveling Points
FIGURE-2-13-0-991-005-A01

2-14-0 Jacking

****ON A/C A321-100 A321-200 A321neo A321neo-XLR**

Jacking for Maintenance

1. Aircraft Jacking Points for Maintenance

   A. General

      (1) The A321 can be jacked:
      - At not more than 69 000 kg (152 119 lb),
      - Within the limits of the permissible wind speed when the aircraft is not in a closed environment.

   B. Primary Jacking Points

      (1) The aircraft is provided with three primary jacking points:
      - One located under the forward fuselage (FR8),
      - Two located under the wings (one under each wing, located at the intersection of RIB9 and the datum of the rear spar).

      (2) Three jack adapters are used as intermediary parts between the aircraft and the jacks:
      - One male spherical jack adapter of 19 mm (0.75 in) radius, forming part of the aircraft structure (FR8),
      - Two wing jack pads (one attached to each wing at RIB9 with 2 bolts) for the location of the jack adaptor.
        Wing jack pads are ground equipment.

   C. Auxiliary Jacking Points (Safety Stay)

      (1) When the aircraft is on jacks, it is recommended that a safety stay be placed under the fuselage, between FR73 and FR74, to prevent tail tipping caused by accidental displacement of the center of gravity.

      (2) The safety stay must not be used to lift the aircraft.

      (3) A male spherical ball pad with a 19 mm (0.75 in) radius, forming part of the aircraft structure, is provided for using the safety stay.

2. Jacks and Safety Stay

   A. Jack Design

      (1) The maximum permitted loads given in the table in FIGURE 2-14-0-991-038-A are the maximum loads applicable on jack fittings.

(2) In the fully retracted position (jack stroke at minimum), the height of the jack is such that the jack may be placed beneath the aircraft in the most adverse conditions, namely, tires deflated and shock absorbers depressurized. In addition, there must be a clearance of approximately 50 mm (1.97 in) between the aircraft jacking point and the jack upper end.

(3) The lifting jack stroke enables the aircraft to be jacked up so that the fuselage longitudinal datum line (aircraft center line) is parallel to the ground, with a clearance of 100 mm (3.94 in) between the main landing gear wheels and the ground. This enables the landing gear extension/retraction tests to be performed.

3. Shoring Cradles

When it is necessary to support the aircraft in order to relieve the loads on the structure to do modifications or major work, shoring cradles shall be placed under each wing and the fuselage as necessary.

NOTE : The aircraft must not be lifted or supported by the wings or fuselage alone without adequate support of the other.

**ON A/C A321-100 A321-200 A321neo A321neo-XLR

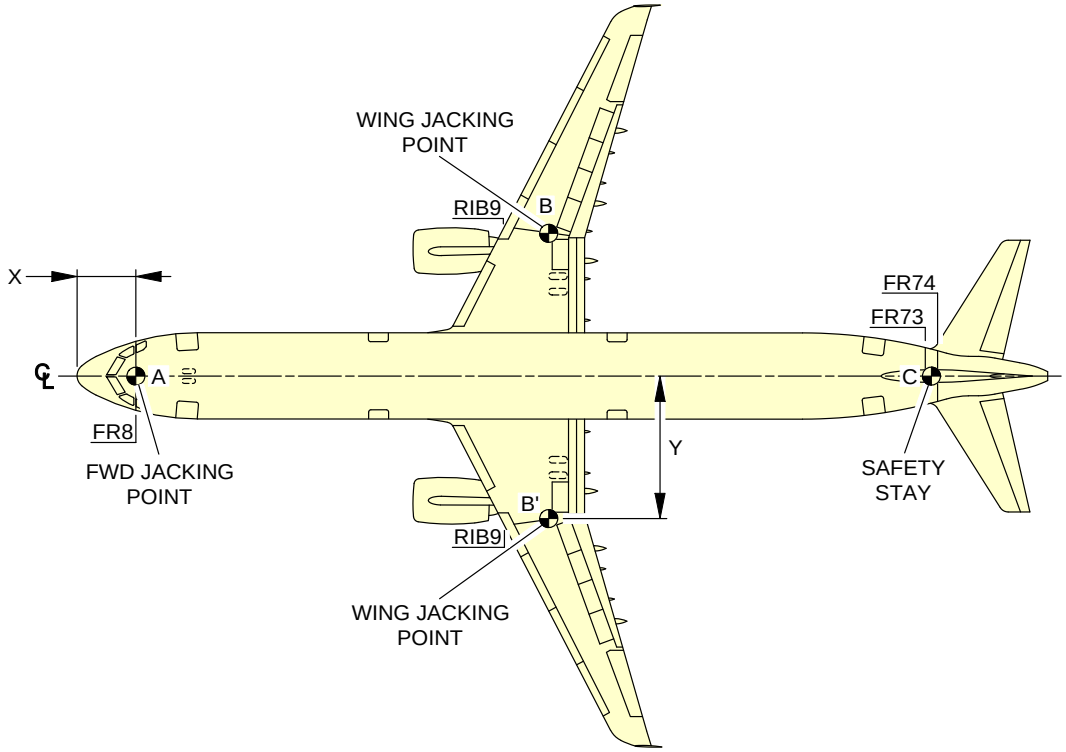

		X		Y		MAXIMUM LOAD ELIGIBLE
		m	ft	m	ft	daN
FORWARD FUSELAGE JACKING POINT	A	2.74	8.99	0	0	6 800
WING JACKING POINT	B	21.83	71.62	6.50	21.33	33 400
	B'	21.83	71.62	-6.50	-21.33	33 400
SAFETY STAY	C	39.5	129.59	0	0	2 000

NOTE:
SAFETY STAY IS NOT USED FOR JACKING.

N_AC_021400_1_0380101_01_02

Jacking for Maintenance
Jacking Point Locations
FIGURE-2-14-0-991-038-A01

**ON A/C A321-100 A321-200 A321neo A321neo-XLR

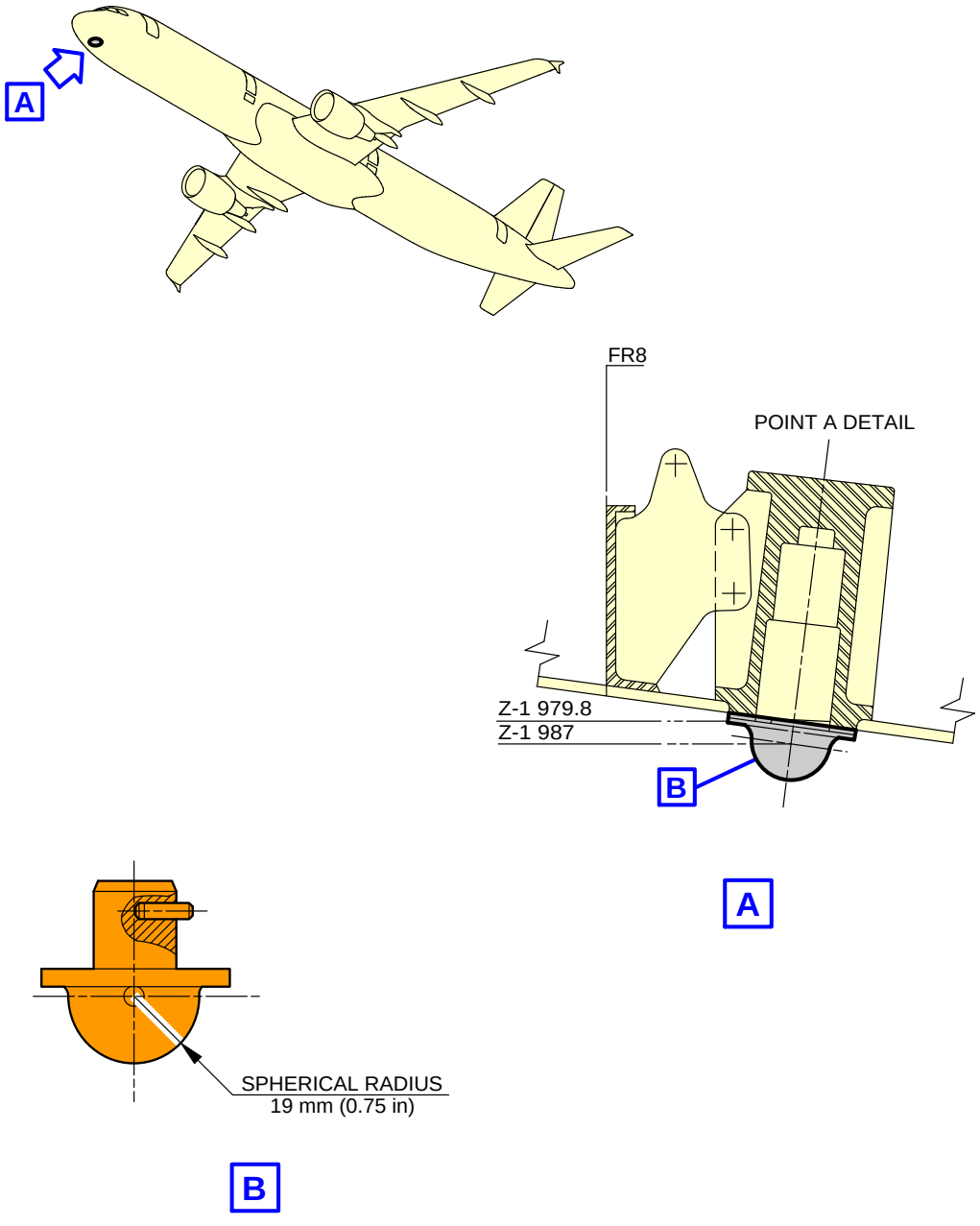

N_AC_021400_1_0390101_01_00

Jacking for Maintenance
Forward Jacking Point
FIGURE-2-14-0-991-039-A01

**ON A/C A321-100 A321-200 A321neo A321neo-XLR

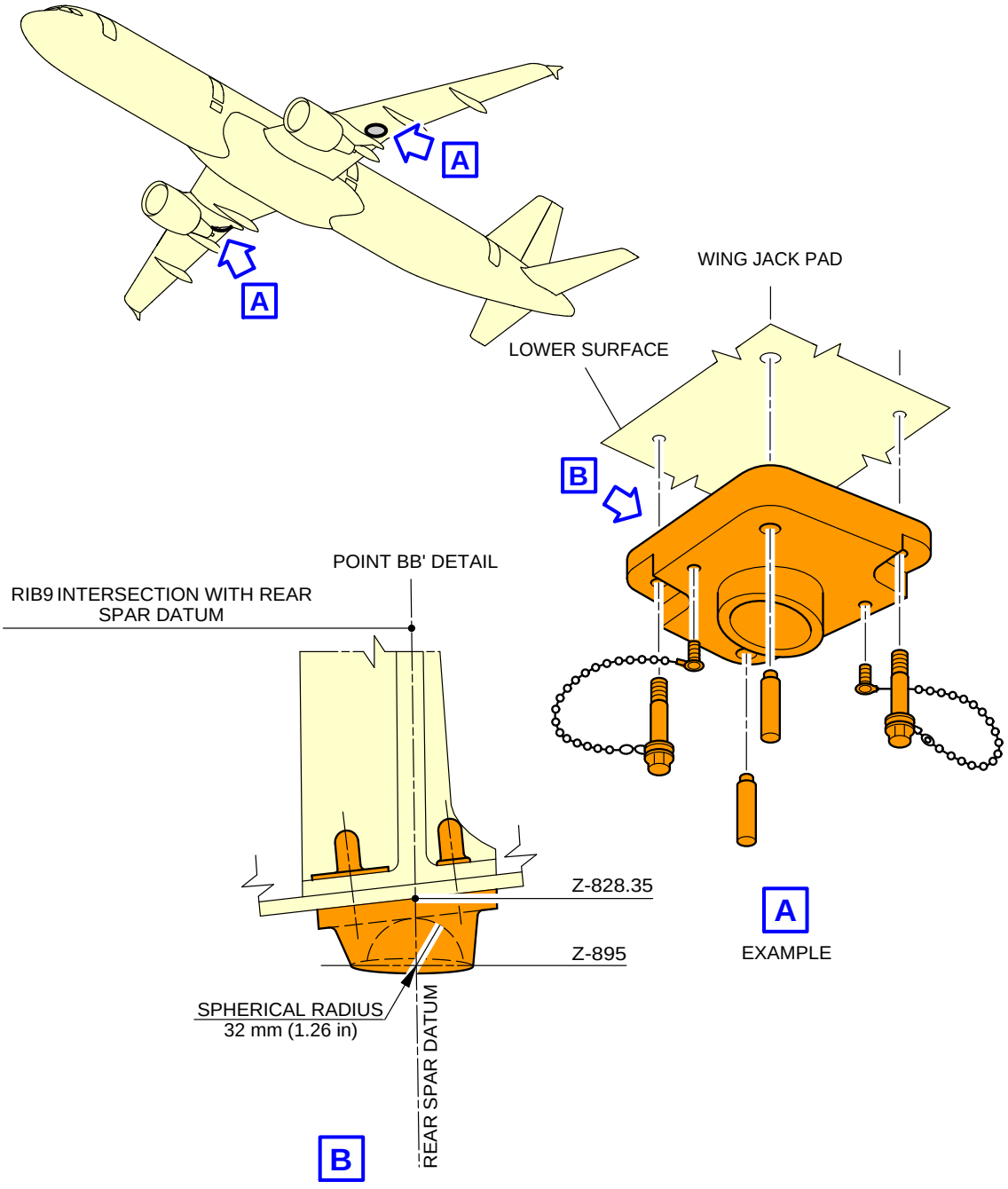

Jacking for Maintenance
Wing Jacking Points
FIGURE-2-14-0-991-040-A01

**ON A/C A321-100 A321-200 A321neo A321neo-XLR

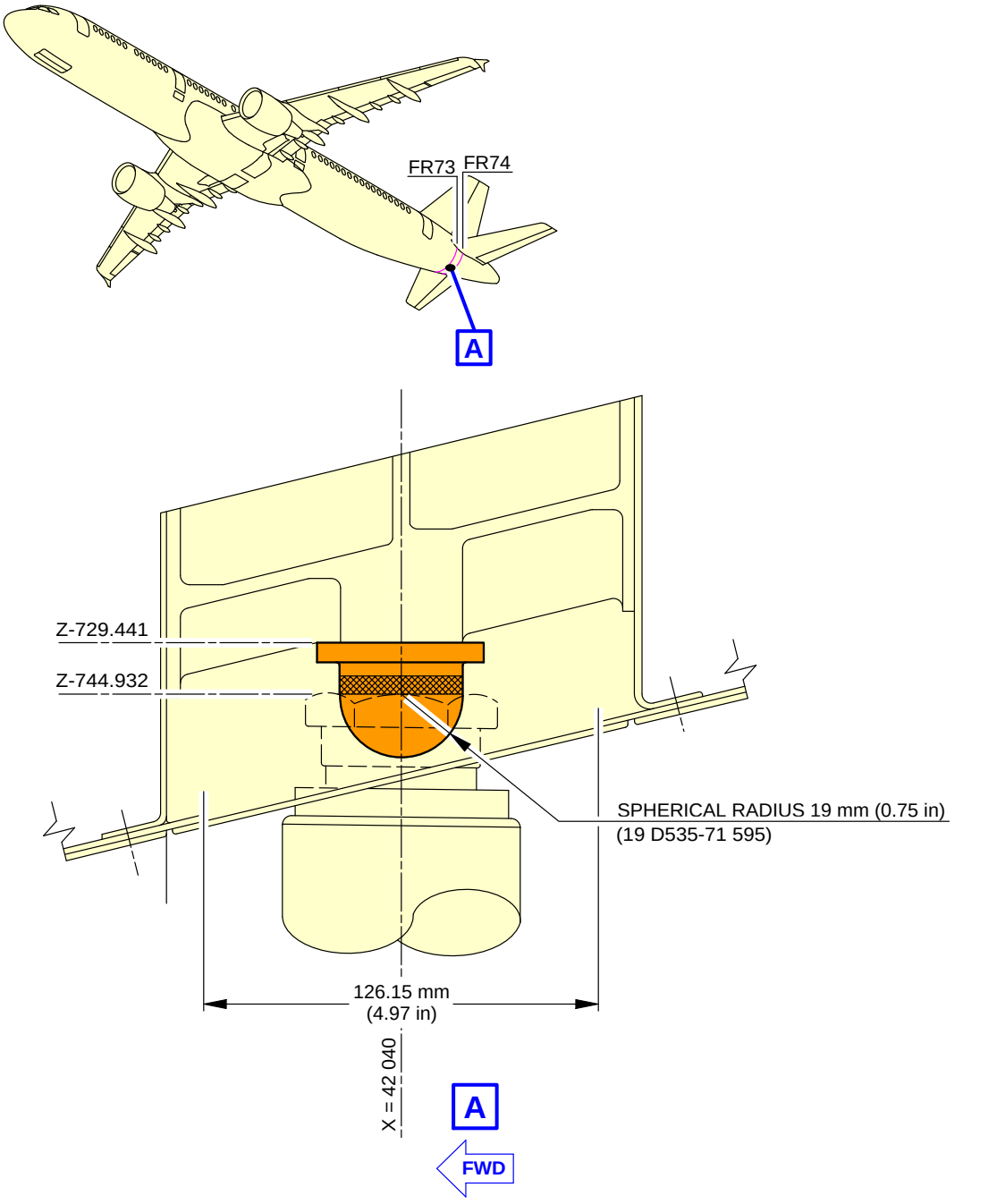

Jacking for Maintenance
Safety Stay
FIGURE-2-14-0-991-041-A01

**ON A/C A321-100 A321-200

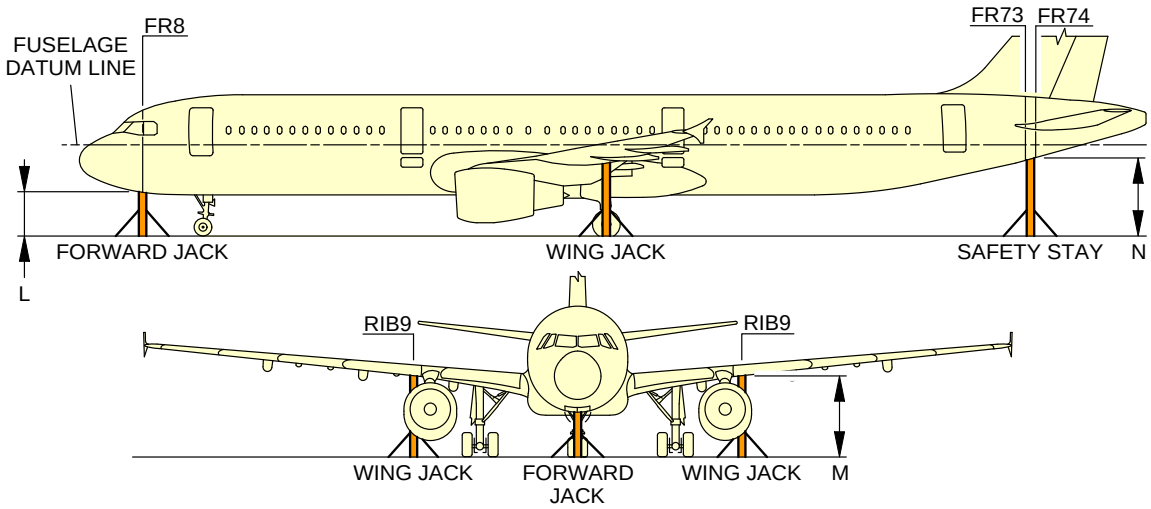

TYPICAL JACK INSTALLATION SHOWN

CONFIGURATION	DESCRIPTION	DISTANCE BETWEEN JACKING/SAFETY POINTS AND THE GROUND		
		L (FORWARD JACK)	M (WING JACK)	N (SAFETY STAY)
– AIRCRAFT ON WHEELS	- NLG SHOCK ABSORBER DEFLATED AND NLG TIRES FLAT - MLG STANDARD TIRES, WITH STANDARD SHOCK ABSORBERS	1 603 mm (63.11 in)	3 124 mm (122.99 in)	3 635 mm (143.11 in)
	TIRES FLAT SHOCK ABSORBERS DEFLATED	1 654 mm (65.12 in)	2 761 mm (108.70 in)	2 889 mm (113.74 in)
	STANDARD TIRES STANDARD SHOCK ABSORBERS	1 924 mm (75.75 in)	3 125 mm (123.03 in)	3 341 mm (131.54 in)
– AIRCRAFT ON JACKS (FORWARD JACK AND WING JACKS) – FUSELAGE DATUM LINE PARALLEL TO THE GROUND	STANDARD TIRES MLG SHOCK ABSORBERS EXTENDED WITH WHEEL CLEARANCE OF 120 mm (4.72 in) FOR MLG RETRACTION OR EXTENSION	2 605 mm (102.56 in)	3 706 mm (145.91 in)	3 830 mm (150.79 in)
	STANDARD TIRES MLG SHOCK ABSORBERS EXTENDED WITH WHEEL CLEARANCE OF 770 mm (30.31 in) FOR REPLACEMENT OF THE MLG	3 255 mm (128.15 in)	4 356 mm (171.50 in)	4 480 mm (176.38 in)
– AIRCRAFT ON FORWARD JACK – MLG WHEELS ON THE GROUND	STANDARD TIRES NLG SHOCK ABSORBERS EXTENDED WITH WHEEL CLEARANCE OF 60 mm (2.36 in) FOR NLG RETRACTION OR EXTENSION	2 371 mm (93.35 in)	NA	2 930 mm (115.35 in)

NOTE:

THE SAFETY STAY IS NOT USED FOR JACKING.

N_AC_021400_1_0420101_01_02

Jacking for Maintenance
Jacking Design
FIGURE-2-14-0-991-042-A01

**ON A/C A321neo

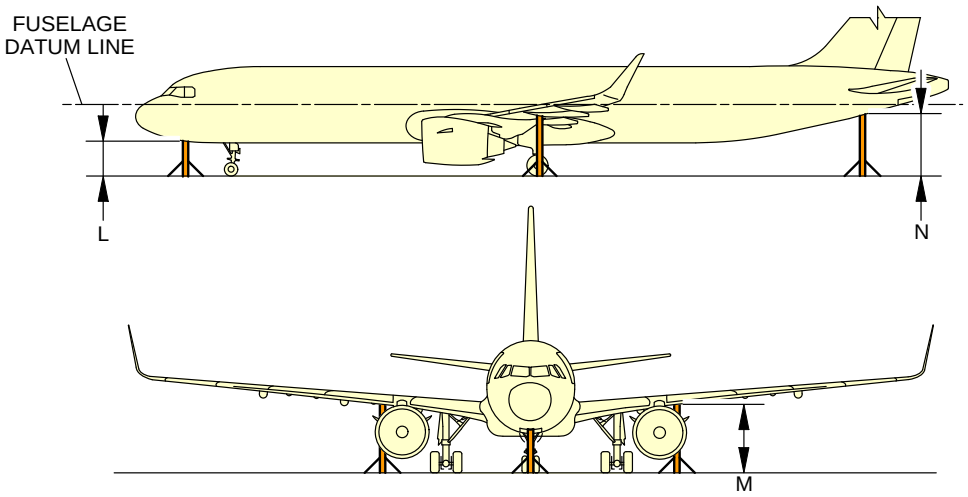

CONFIGURATION	CG POSITION (% MAC)	HEIGHT					
		L		M		N	
		m	ft	m	ft	m	ft
AIRCRAFT ON WHEELS, SHOCK-ABSORBERS DEFLATED, TIRES DEFLATED (RH)	12	1.92	6.30	3.33 LH 2.77 RH	10.93 LH 9.09 RH	3.12	10.24
	41	2.10	6.89	3.31 LH 2.77 RH	10.86 LH 9.09 RH	2.93	9.61
AIRCRAFT ON JACKS, FDL AT 5.26 m (17.26 ft), AIRCRAFT FUSELAGE PARALLEL TO THE GROUND, SHOCK-ABSORBERS EXTENDED, CLEARANCE OF MAIN GEAR WHEELS = 0.70 m (2.30 ft) (STANDARD TIRES 01), CLEARANCE OF NOSE GEAR WHEELS = 0.99 m (3.25 ft) (STANDARD TIRES 01)	N/A	3.28	10.76	4.43	14.53	4.52	14.83
AIRCRAFT ON WHEELS (STANDARD TIRES 01) MAXIMUM JACKING WEIGHT = 69 000 kg (152 119 lb)	12	1.88	6.17	3.22	10.56	3.48	11.42
	41	2.05	6.73	3.20	10.50	3.29	10.79
AIRCRAFT ON WHEELS (STANDARD TIRES 01) OEW = 48 725 kg (107 420 lb)	12	1.92	6.30	3.27	10.73	3.53	11.58
	41	2.14	7.02	3.26	10.70	3.31	10.86

NOTE:

01 STANDARD TIRES: NOSE LANDING GEAR = 762 x 233.52 R15
MAIN LANDING GEAR = 1 270 x 455 R22

N_AC_021400_1_0680101_01_01

Jacking for Maintenance
Jacking Design (Sheet 1 of 2)
FIGURE-2-14-0-991-068-A01

**ON A/C A321neo

CONFIGURATION	CG POSITION (% MAC)	HEIGHT					
		L		M		N	
		m	ft	m	ft	m	ft
AIRCRAFT ON WHEELS, NLG SHOCK-ABSORBER DEFLATED AND TIRES DEFLATED, MLG STANDARD SHOCK-ABSORBER (RH) (STANDARD TIRES 01)	12	1.6	5.25	3.13	10.27	3.65	11.98
	37	1.61	5.28	3.12	10.24	3.62	11.88
AIRCRAFT ON JACKS, FDL PARALLEL TO THE GROUND AT 4.56 m (14.96 ft), SHOCK-ABSORBERS EXTENDED (STANDARD TIRES 01), FOR MLG RETRACTION/EXTENSION OR MLG REPLACEMENT MAKE SURE CLEARANCE OF 0.95 m (3.12 ft) FROM GROUND TO BOTTOM OF MAIN FITTING OR MAKE SURE CLEARANCE OF MLG WHEELS = 0.12 m (0.39 ft)	N/A	2.61	8.56	3.71	12.17	3.83	12.57
AIRCRAFT ON JACKS, FDL PARALLEL TO THE GROUND AT 5.21 m (17.09 ft), SHOCK-ABSORBERS EXTENDED (STANDARD TIRES 01), FOR REPLACEMENT OF MLG SHOCK-ABSORBER MAKE SURE CLEARANCE OF 1.6 m (5.25 ft) FROM GROUND TO BOTTOM OF MAIN FITTING OR MAKE SURE CLEARANCE OF MLG WHEELS = 0.77 m (2.53 ft)	N/A	3.26	10.7	4.36	14.3	4.48	14.7
AIRCRAFT ON JACK WITH MLG WHEELS ON GROUND, NLG SHOCK-ABSORBER EXTENDED (STANDARD TIRES 01), FOR NLG RETRACTION/EXTENSION OR REPLACEMENT OF NLG SHOCK-ABSORBER MAKE SURE CLEARANCE OF 1 m (3.28 ft) FROM GROUND TO BOTTOM OF TURNING TUBE OR MAKE SURE CLEARANCE OF NOSE GEAR WHEELS = 0.60 m (1.97 ft)	12	2.37	7.78	3.13	10.27	2.95	9.68
	37	2.37	7.78	3.12	10.24	2.92	9.58

NOTE:

01 STANDARD TIRES: NOSE LANDING GEAR = 762 x 233.52 R15
MAIN LANDING GEAR = 1 168.4 x 431.8 R20

N_AC_021400_1_0680102_01_00

Jacking for Maintenance
Jacking Design (Sheet 2 of 2)
FIGURE-2-14-0-991-068-A01

**ON A/C A321neo-XLR

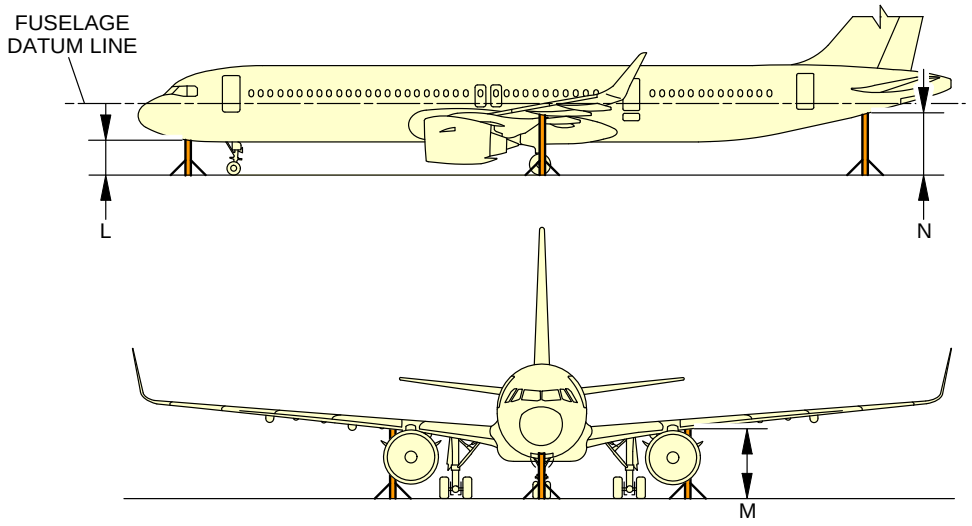

CONFIGURATION	CG POSITION (% MAC)	HEIGHT					
		L		M		N	
		m	ft	m	ft	m	ft
AIRCRAFT ON WHEELS, SHOCK-ABSORBERS DEFLATED, TIRES DEFLATED (RH)	12	1.92	6.30	3.27 LH 2.78 RH	10.73 LH 9.12 RH	3.07	10.07
	41	2.11	6.92	3.26 LH 2.78 RH	10.70 LH 9.12 RH	2.89	9.48
AIRCRAFT ON JACKS, FDL AT 5.26 m (17.26 ft), AIRCRAFT FUSELAGE PARALLEL TO THE GROUND, SHOCK-ABSORBERS EXTENDED, CLEARANCE OF MAIN GEAR WHEELS = 0.70 m (2.30 ft) (STANDARD TIRES 01), CLEARANCE OF NOSE GEAR WHEELS = 1 m (3.28 ft) (STANDARD TIRES 01)	N/A	3.28	10.76	4.43	14.53	4.52	14.83
AIRCRAFT ON WHEELS (STANDARD TIRES 01) MAXIMUM JACKING WEIGHT = 69 000 kg (152 119 lb)	12	1.88	6.17	3.17	10.40	3.39	11.12
	41	2.06	6.76	3.17	10.40	3.21	10.53
AIRCRAFT ON WHEELS (STANDARD TIRES 01) OEW = 49 208 kg (108 485 lb)	12	1.93	6.33	3.21	10.53	3.42	11.22
	41	2.16	7.09	3.20	10.50	3.19	10.47

NOTE:

01 STANDARD TIRES: NOSE LANDING GEAR = 762 x 233.52 R15
MAIN LANDING GEAR = 1 270 x 455 R22

N_AC_021400_1_0690101_01_01

Jacking for Maintenance
Jacking Design (Sheet 1 of 2)
FIGURE-2-14-0-991-069-A01

**ON A/C A321neo-XLR

CONFIGURATION	CG POSITION (% MAC)	HEIGHT					
		L		M		N	
		m	ft	m	ft	m	ft
AIRCRAFT ON WHEELS, NLG SHOCK-ABSORBER DEFLATED AND TIRES DEFLATED, MLG STANDARD SHOCK-ABSORBER (RH) (STANDARD TIRES 01)	12	1.6	5.25	3.13	10.27	3.65	11.98
	37	1.61	5.28	3.12	10.24	3.62	11.88
AIRCRAFT ON JACKS, FDL PARALLEL TO THE GROUND AT 4.56 m (14.96 ft), SHOCK-ABSORBERS EXTENDED (STANDARD TIRES 01), FOR MLG RETRACTION/EXTENSION OR MLG REPLACEMENT MAKE SURE CLEARANCE OF 0.95 m (3.12 ft) FROM GROUND TO BOTTOM OF MAIN FITTING OR MAKE SURE CLEARANCE OF MLG WHEELS = 0.12 m (0.39 ft)	N/A	2.61	8.56	3.71	12.17	3.83	12.57
AIRCRAFT ON JACKS, FDL PARALLEL TO THE GROUND AT 5.21 m (17.09 ft), SHOCK-ABSORBERS EXTENDED (STANDARD TIRES 01), FOR REPLACEMENT OF MLG SHOCK-ABSORBER MAKE SURE CLEARANCE OF 1.6 m (5.25 ft) FROM GROUND TO BOTTOM OF MAIN FITTING OR MAKE SURE CLEARANCE OF MLG WHEELS = 0.77 m (2.53 ft)	N/A	3.26	10.7	4.36	14.3	4.48	14.7
AIRCRAFT ON JACK WITH MLG WHEELS ON GROUND, NLG SHOCK-ABSORBER EXTENDED (STANDARD TIRES 01), FOR NLG RETRACTION/EXTENSION OR REPLACEMENT OF NLG SHOCK-ABSORBER MAKE SURE CLEARANCE OF 1 m (3.28 ft) FROM GROUND TO BOTTOM OF TURNING TUBE OR MAKE SURE CLEARANCE OF NOSE GEAR WHEELS = 0.60 m (1.97 ft)	12	2.37	7.78	3.13	10.27	2.95	9.68
	37	2.37	7.78	3.12	10.24	2.92	9.58

NOTE:

01 STANDARD TIRES: NOSE LANDING GEAR = 762 x 233.52 R15
MAIN LANDING GEAR = 1 168.4 x 431.8 R20

N_AC_021400_1_0690102_01_00

Jacking for Maintenance
Jacking Design (Sheet 2 of 2)
FIGURE-2-14-0-991-069-A01

**ON A/C A321-100 A321-200 A321neo A321neo-XLR

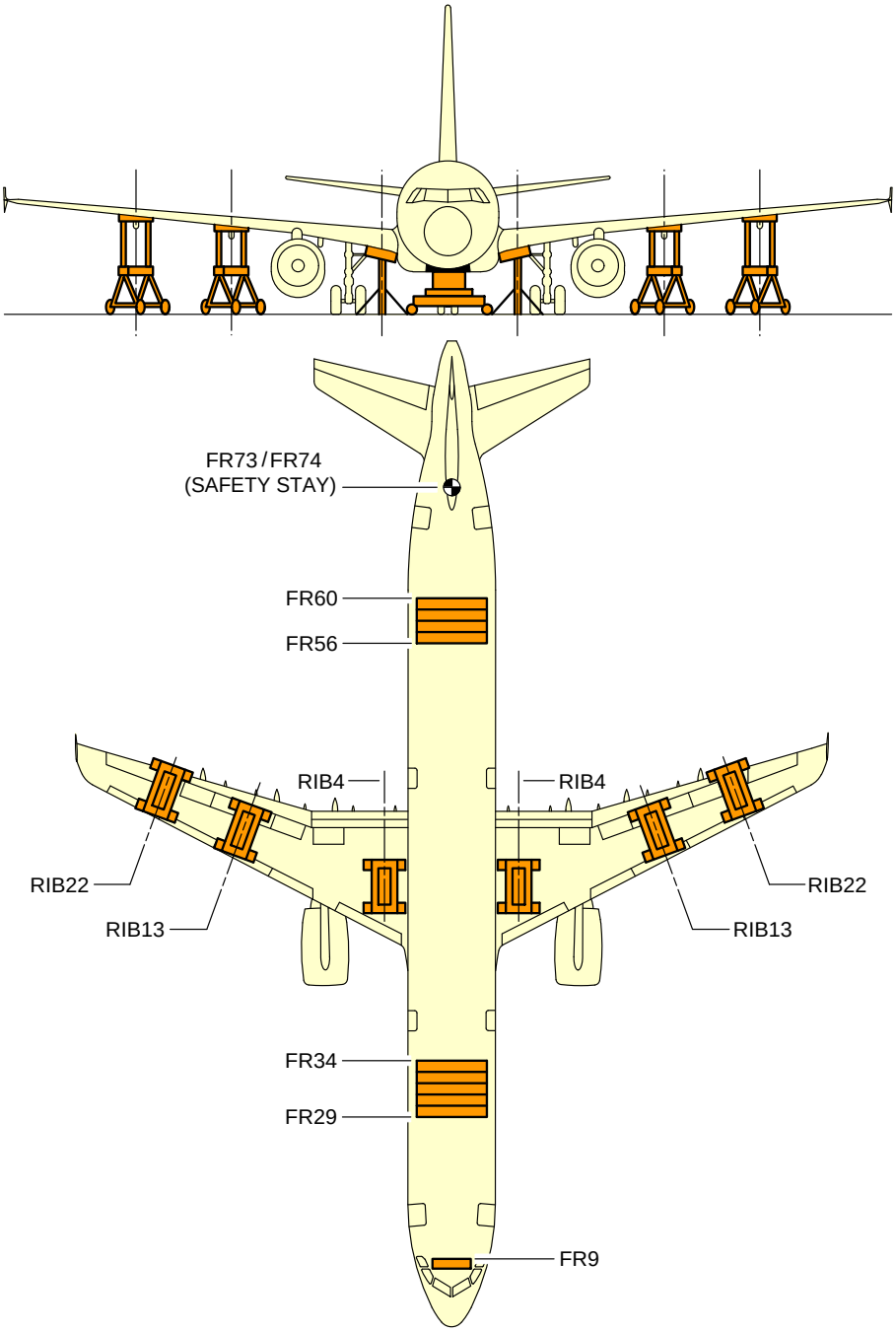

NOTE: THE SHORING CRADLE MUST BE INSTALLED AT THE EXACT LOCATION OF THE FRAME.

N_AC_021400_1_0440101_01_00

Jacking for Maintenance
Location of Shoring Cradles
FIGURE-2-14-0-991-044-A01

****ON A/C A321-100 A321-200 A321neo**

Jacking of the Landing Gear

1. General

Landing gear jacking will be required to lift the landing gear wheels off the ground.

NOTE : You can lift the aircraft at Maximum Ramp Weight (MRW).

NOTE : The load at each jacking position is the load required to give a 25.4 mm (1 in) clearance between the ground and the tire.

****ON A/C A321-100 A321-200**

2. Main Gear Jacking

The main gears are normally jacked up by placing a jack directly under the ball pad.

The ball spherical radius is 19 mm (0.75 in).

It is also possible to jack the main gear using a cantilever jack.

The reactions at each of the jacking points are shown in the table, see FIGURE 2-14-0-991-061-A.

****ON A/C A321neo**

3. Main Gear Jacking

The main gears are normally jacked up by placing a jack directly under the ball pad.

The ball spherical radius is 19 mm (0.75 in).

It is also possible to jack the main gear using a cantilever jack.

The reactions at each of the jacking points are shown in the table, see FIGURE 2-14-0-991-064-A.

****ON A/C A321-100 A321-200**

4. Nose Gear Jacking

For nose gear jacking, a 19 mm (0.75 in) radius ball pad is fitted under the lower end of the shock-absorber sliding tube. Jacking can be accomplished either by placing a jack directly under the ball pad, or using an adapter fitting provided with an identical ball pad.

The reactions at each of the jacking points are shown in the table, see FIGURE 2-14-0-991-061-A.

****ON A/C A321neo**

5. Nose Gear Jacking

For nose gear jacking, a 19 mm (0.75 in) radius ball pad is fitted under the lower end of the shock-absorber sliding tube. Jacking can be accomplished either by placing a jack directly under the ball pad, or using an adapter fitting provided with an identical ball pad.

The reactions at each of the jacking points are shown in the table, see FIGURE 2-14-0-991-064-A.

****ON A/C A321-100 A321-200 A321neo**

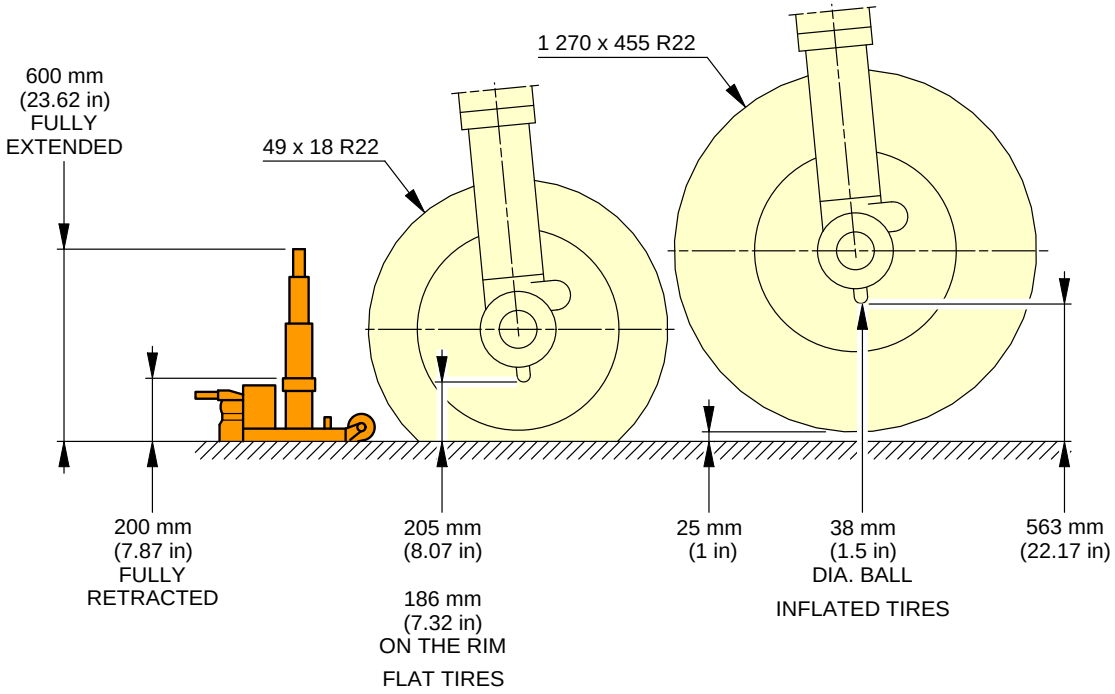

NOTE: TWIN WHEEL TRACK IS 927 mm (36.5 in).
THE FLAT TIRES VIEW SHOWS THE MINIMUM HEIGHT TO ENGAGE JACK WITH 2 FLAT TIRES.
THE INFLATED TIRES VIEW SHOWS THE JACKING HEIGHT TO GIVE 25 mm (1 in)
CLEARANCE BETWEEN THE TIRE AND GROUND.

N_AC_021400_1_0240101_01_00

Jacking of the Landing Gear
MLG Jacking Point Location - Twin Wheels
FIGURE-2-14-0-991-024-A01

****ON A/C A321-100 A321-200 A321neo**

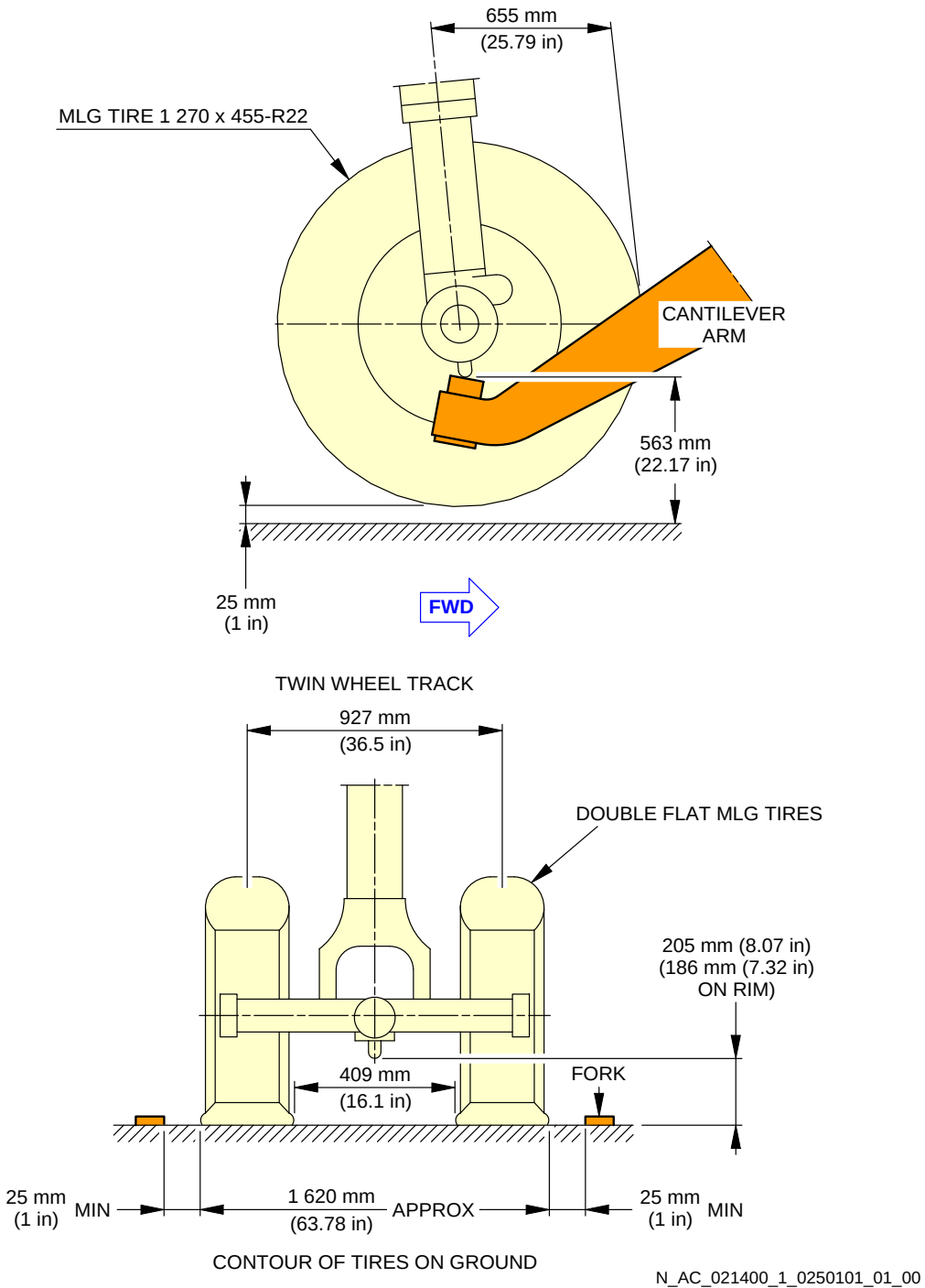

Jacking of the Landing Gear
MLG Jacking with Cantilever Jack - Twin Wheels
FIGURE-2-14-0-991-025-A01

****ON A/C A321-100 A321-200 A321neo**

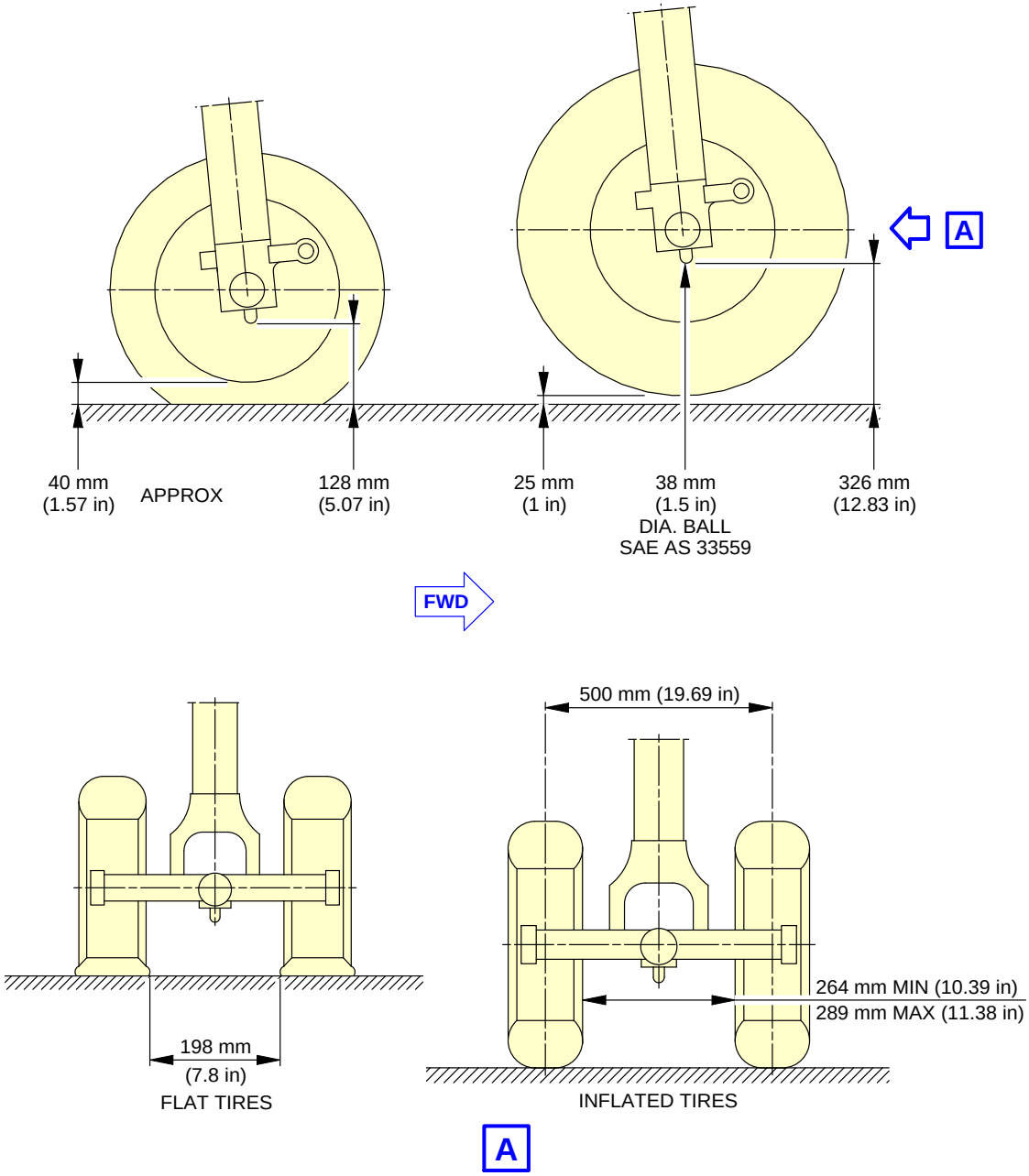

NOTE: THE FLAT TIRES VIEW SHOWS THE MINIMUM HEIGHT TO ENGAGE JACK WITH 2 FLAT TIRES. THE INFLATED TIRES VIEW SHOWS THE JACKING HEIGHT TO GIVE 25 mm (1 in) CLEARANCE BETWEEN THE TIRE AND GROUND.

N_AC_021400_1_0280101_01_00

Jacking of the Landing Gear
NLG Jacking - Point Location
FIGURE-2-14-0-991-028-A01

****ON A/C A321-100 A321-200**

A321-100/-200 WV011	
MAXIMUM DESIGN TAXI WEIGHT (MTW)	93 900 kg (207 014 lb)
MAXIMUM DESIGN TAKE-OFF WEIGHT (MTOW)	93 500 kg (206 132 lb)
MAXIMUM LOAD VALUE TO BE APPLIED ON NLG JACKING POINT	9 000 kg (19 842 lb)
NUMBER OF JACKING POINTS ON ONE MLG	1
MAXIMUM LOAD VALUE TO BE APPLIED ON MLG JACKING POINT (LEFT OR RIGHT)	44 500 kg (98 106 lb)

N_AC_021400_1_0610101_01_00

Jacking of the Landing Gear
Maximum Load Capacity to Lift Each Jacking Point
FIGURE-2-14-0-991-061-A01

****ON A/C A321neo**

A321 NEO WV052 AND WV053	
MAXIMUM DESIGN TAXI WEIGHT (MTW)	93 900 kg (207 014 lb)
MAXIMUM DESIGN TAKE-OFF WEIGHT (MTOW)	93 500 kg (206 132 lb)
MAXIMUM LOAD VALUE TO BE APPLIED ON NLG JACKING POINT	12 207 kg (26 912 lb)
NUMBER OF JACKING POINTS ON ONE MLG	1
MAXIMUM LOAD VALUE TO BE APPLIED ON MLG JACKING POINT (LEFT OR RIGHT)	59 103 kg (130 300 lb)

N_AC_021400_1_0640101_01_00

Jacking of the Landing Gear
Maximum Load Capacity to Lift Each Jacking Point
FIGURE-2-14-0-991-064-A01

AIRCRAFT PERFORMANCE

3-1-0 General Information

****ON A/C A321-100 A321-200 A321neo**

General Information

1. Standard day temperatures for the altitudes shown are tabulated below:

Standard Day Temperatures for the Altitudes			
Altitude		Standard Day Temperature	
FEET	METERS	°F	°C
0	0	59.0	15.0
2 000	610	51.9	11.1
4 000	1 220	44.7	7.1
6 000	1 830	37.6	3.1
8 000	2 440	30.5	-0.8

3-2-1 Payload / Range - ISA Conditions

****ON A/C A321-100 A321-200 A321neo A321neo-XLR**

Payload/Range - ISA Conditions

1. This section provides the payload/range at ISA conditions.

****ON A/C A321-100 A321-200**

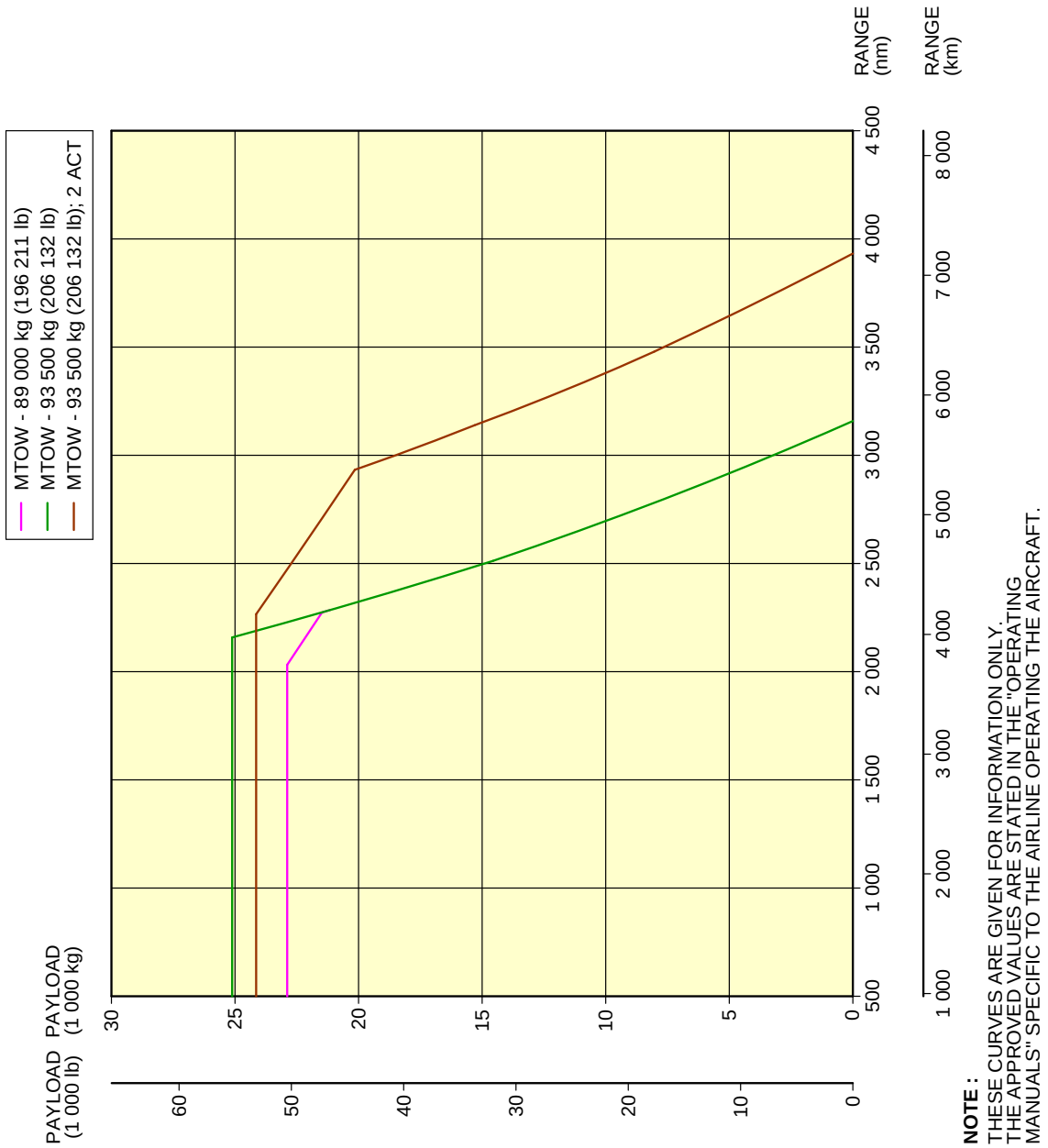

N_AC_030201_1_0190101_01_00

Payload/Range - ISA Conditions
FIGURE-3-2-1-991-019-A01

****ON A/C A321-100 A321-200**

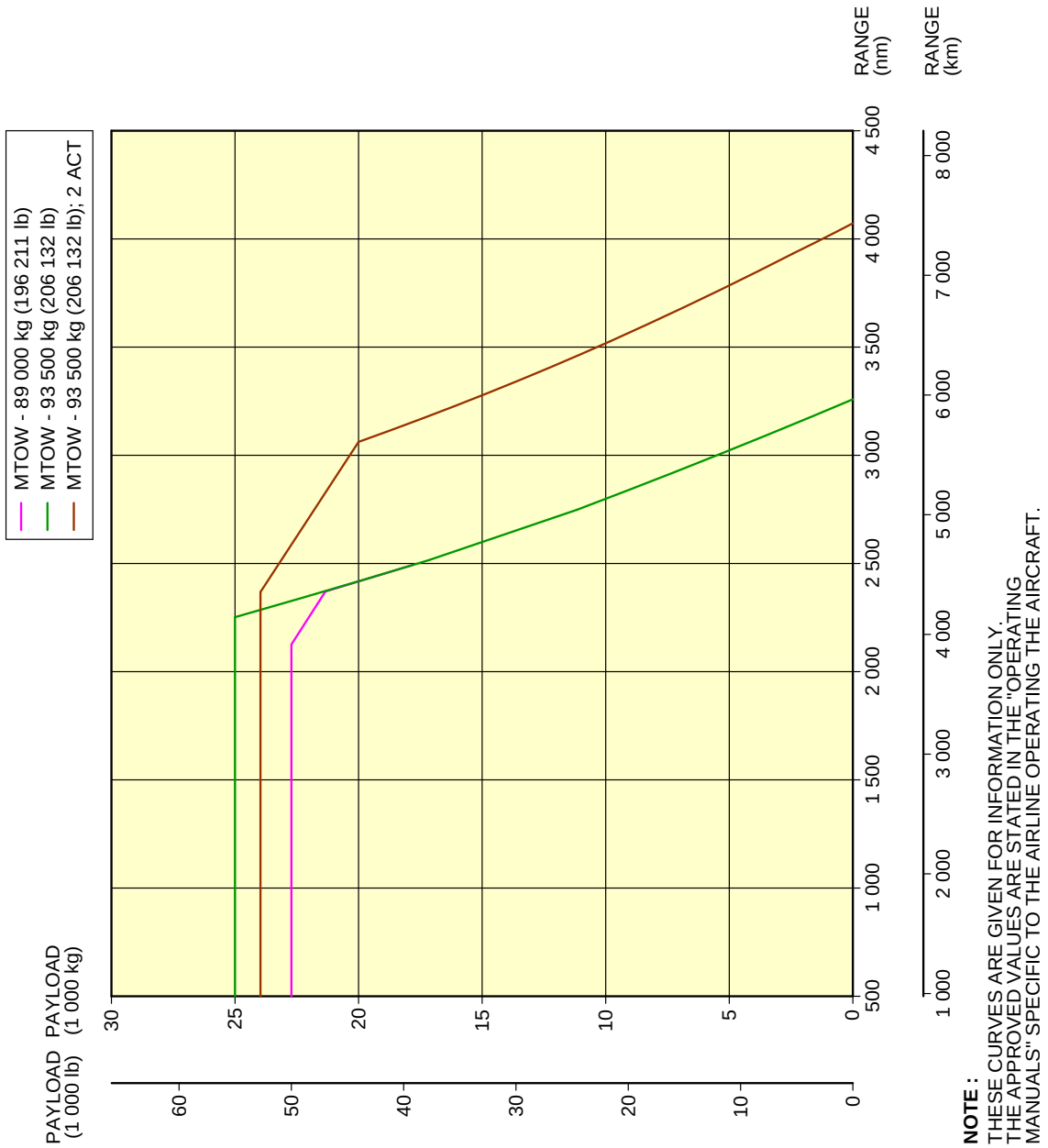

N_AC_030201_1_0200101_01_00

Payload/Range - ISA Conditions
Sharklet
FIGURE-3-2-1-991-020-A01

****ON A/C A321neo**

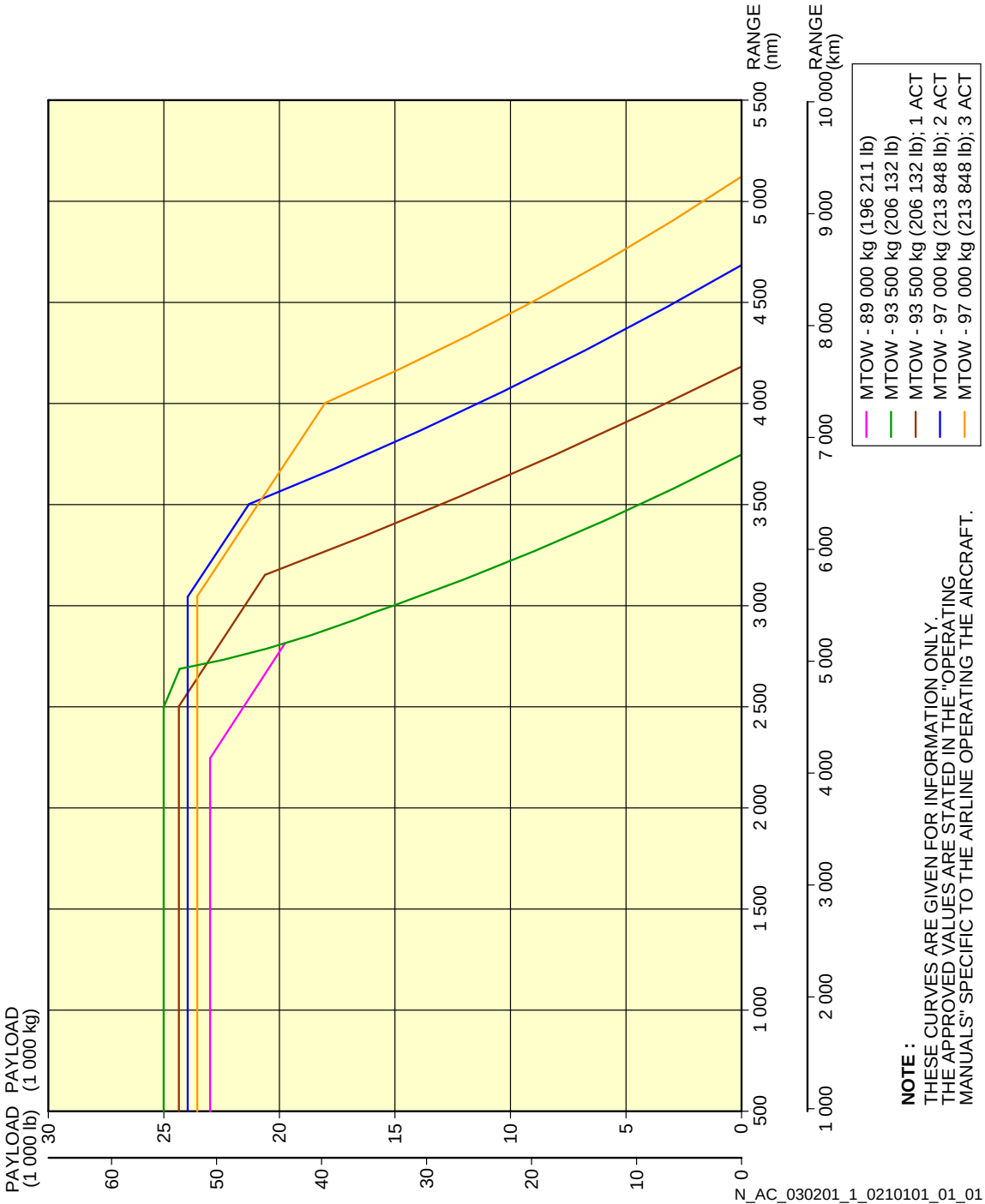

Payload/Range - ISA Conditions
FIGURE-3-2-1-991-021-A01

**ON A/C A321neo-XLR

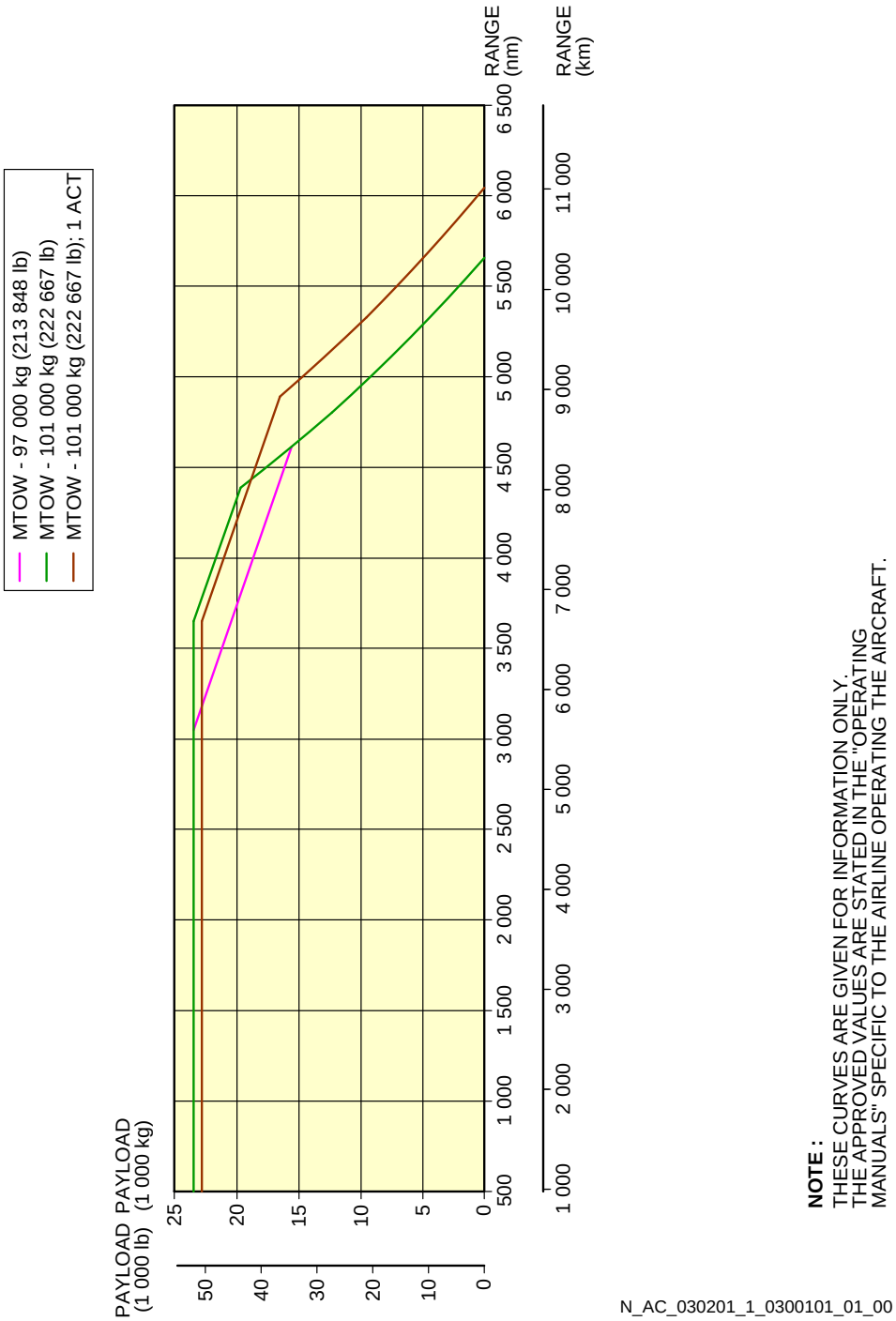

Payload/Range - ISA Conditions
3-2-1-991-030-A01

3-3-1 Take-off Weight Limitation - ISA Conditions

****ON A/C A321-100 A321-200 A321neo**

Take-Off Weight Limitation - ISA Conditions

1. This section gives the take-off weight limitation at ISA conditions.

****ON A/C A321-100 A321-200**

NOTE: THESE CURVES ARE GIVEN FOR INFORMATION ONLY
THE APPROVED VALUES ARE STATED IN THE "OPERATING MANUALS" SPECIFIC TO THE AIRLINE OPERATING THE AIRCRAFT.

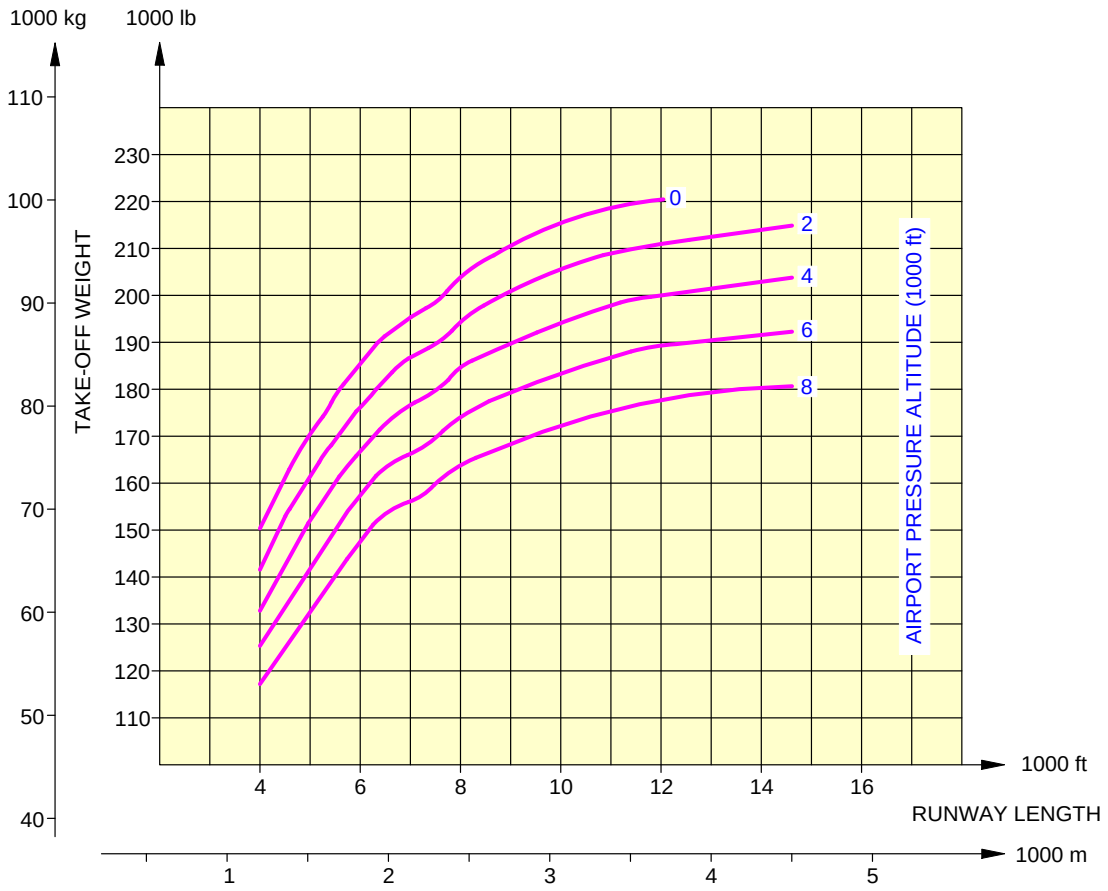

N_AC_030301_1_0070101_01_00

Take-Off Weight Limitation - ISA Conditions
CFM56 Series Engine
FIGURE-3-3-1-991-007-A01

****ON A/C A321-100 A321-200**

NOTE: THESE CURVES ARE GIVEN FOR INFORMATION ONLY
THE APPROVED VALUES ARE STATED IN THE "OPERATING MANUALS" SPECIFIC TO THE AIRLINE OPERATING THE AIRCRAFT.

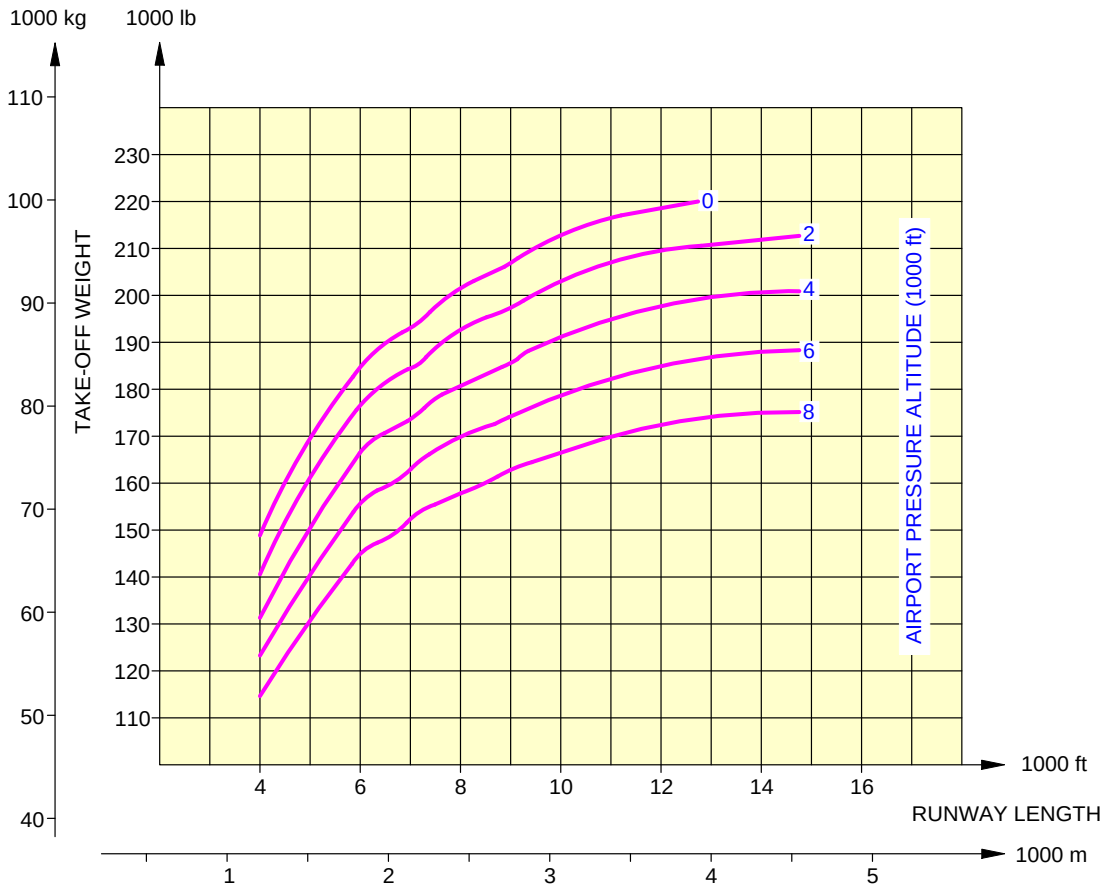

N_AC_030301_1_0080101_01_00

Take-Off Weight Limitation - ISA Conditions
IAE V2500 Series Engine
FIGURE-3-3-1-991-008-A01

****ON A/C A321neo**

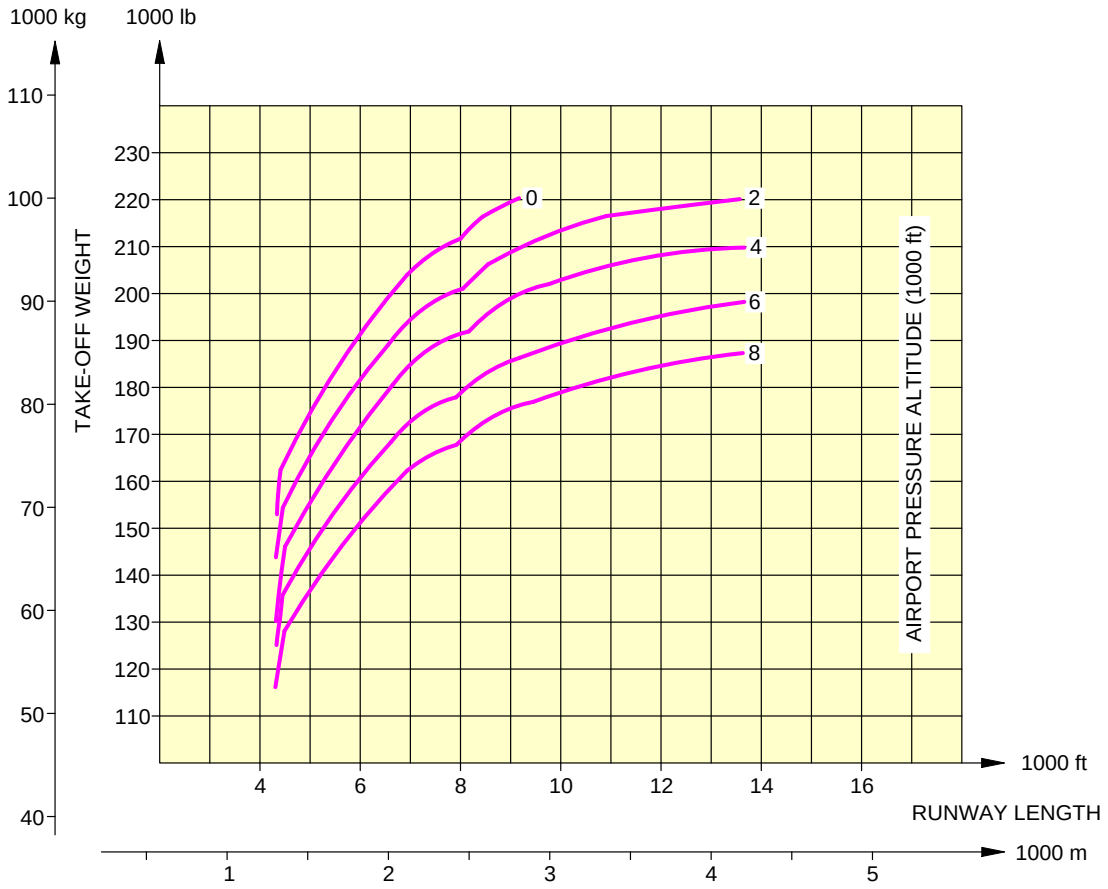

NOTE:
THESE CURVES ARE GIVEN FOR INFORMATION ONLY
THE APPROVED VALUES ARE STATED IN THE "OPERATING MANUALS" SPECIFIC TO THE AIRLINE OPERATING THE AIRCRAFT.

N_AC_030301_1_0100101_01_00

Take-Off Weight Limitation - ISA Conditions
LEA-1A Series Engine
FIGURE-3-3-1-991-010-A01

****ON A/C A321neo**

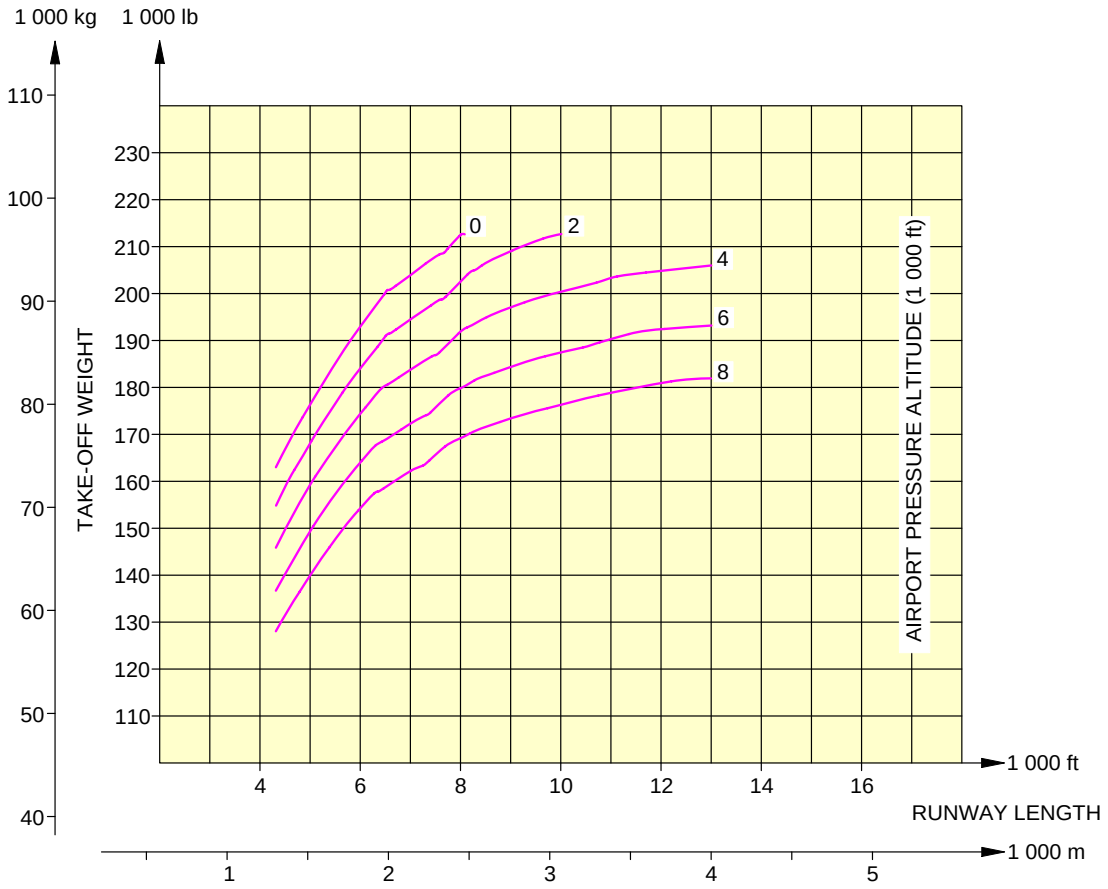

NOTE:
THESE CURVES ARE GIVEN FOR INFORMATION ONLY.
THE APPROVED VALUES ARE STATED IN THE "OPERATING MANUALS" SPECIFIC TO THE AIRLINE OPERATING THE AIRCRAFT.

N_AC_030301_1_0110101_01_00

Take-Off Weight Limitation - ISA Conditions
PW Engines
FIGURE-3-3-1-991-011-A01

3-3-2 Take-off Weight Limitation - ISA +15°C (+59°F) Conditions

****ON A/C A321-100 A321-200 A321neo**

Take-Off Weight Limitation - ISA +15°C (+27°F) Conditions

1. This section gives the take-off weight limitation at ISA +15°C (+27°F) conditions.

****ON A/C A321-100 A321-200**

NOTE: THESE CURVES ARE GIVEN FOR INFORMATION ONLY
THE APPROVED VALUES ARE STATED IN THE "OPERATING MANUALS" SPECIFIC TO THE AIRLINE OPERATING THE AIRCRAFT.

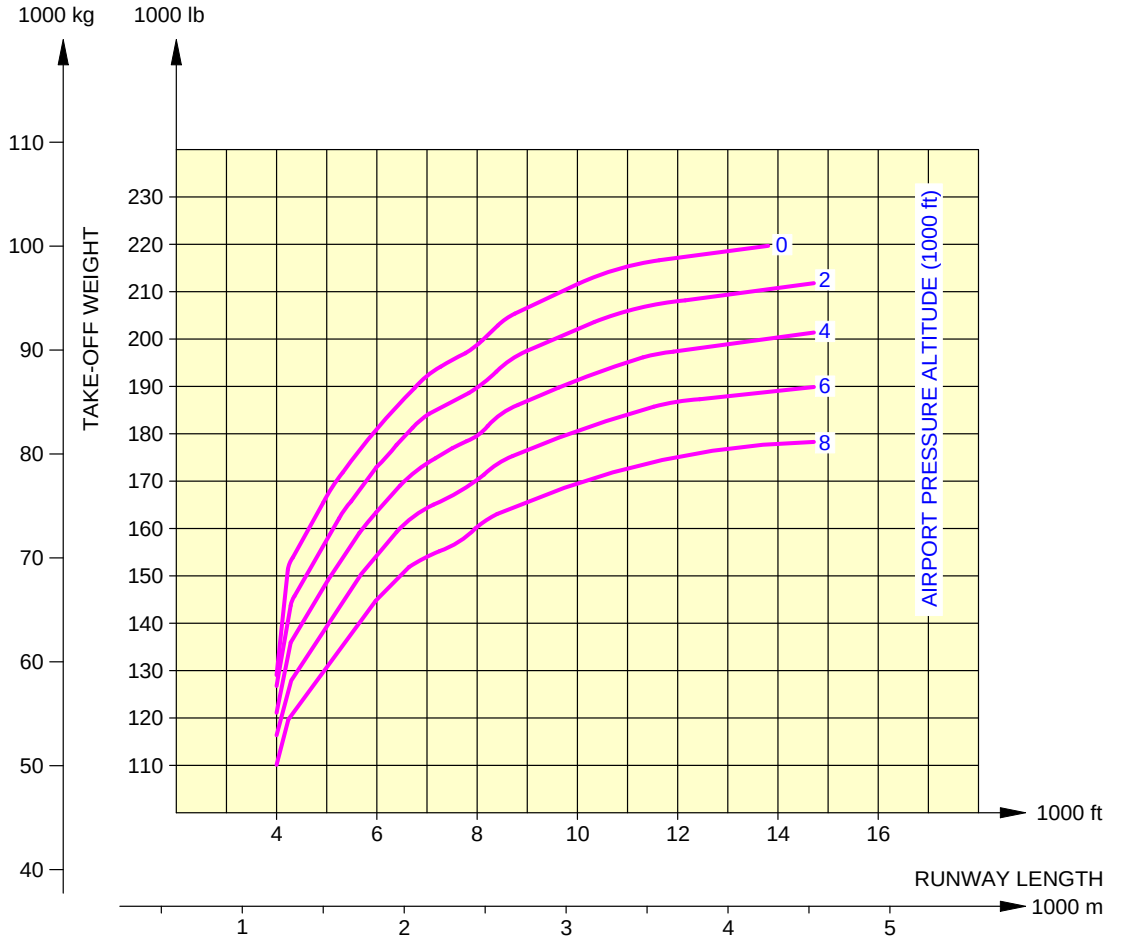

N_AC_030302_1_0070101_01_00

Take-Off Weight Limitation - ISA +15°C (+27°F) Conditions
CFM56 Series Engine
FIGURE-3-3-2-991-007-A01

****ON A/C A321-100 A321-200**

NOTE: THESE CURVES ARE GIVEN FOR INFORMATION ONLY
THE APPROVED VALUES ARE STATED IN THE "OPERATING MANUALS" SPECIFIC TO THE AIRLINE OPERATING THE AIRCRAFT.

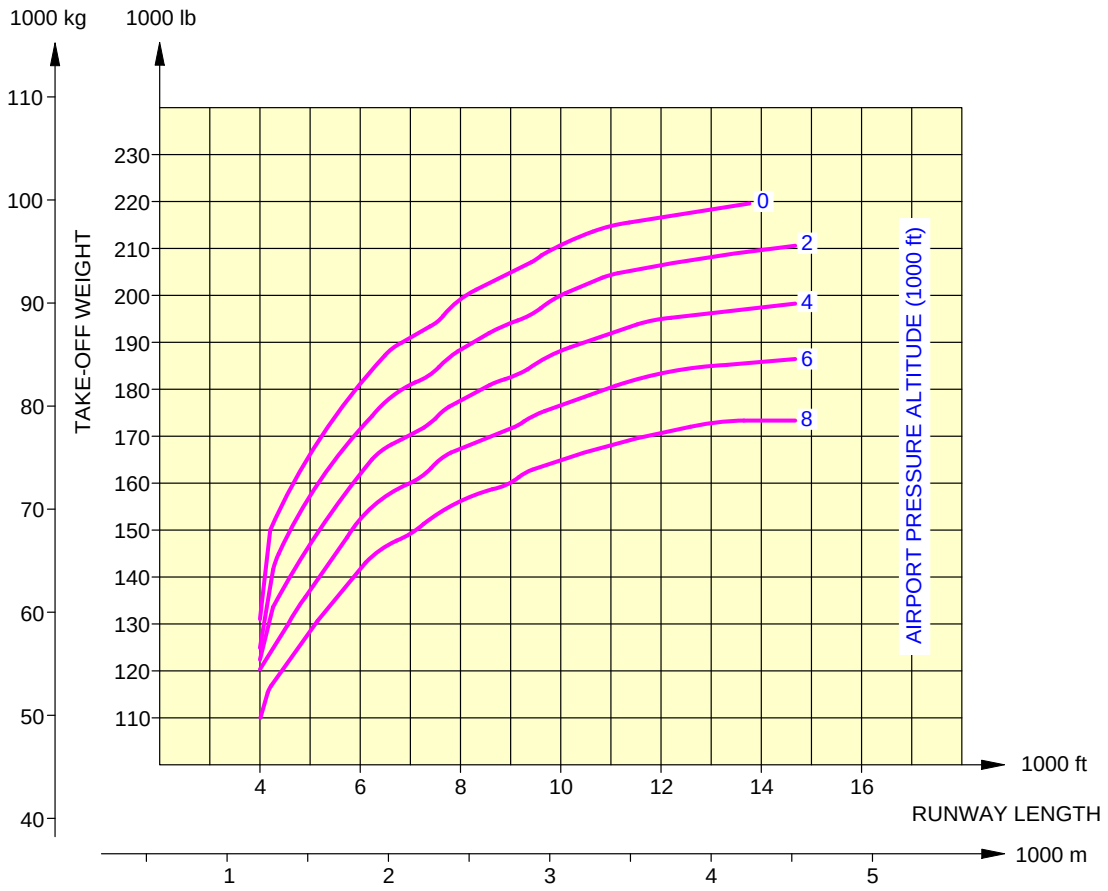

N_AC_030302_1_0080101_01_00

Take-Off Weight Limitation - ISA +15°C (+27°F) Conditions
IAE V2500 Series Engine
FIGURE-3-3-2-991-008-A01

****ON A/C A321neo**

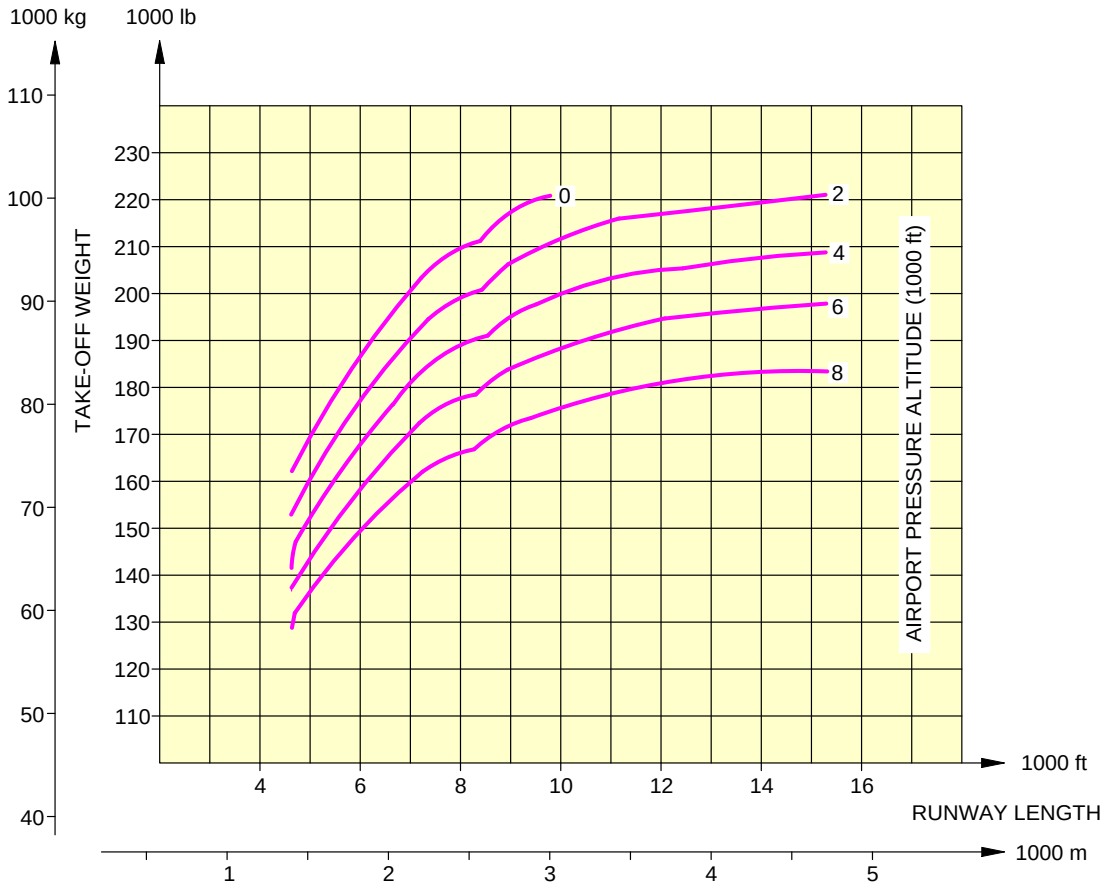

NOTE:
THESE CURVES ARE GIVEN FOR INFORMATION ONLY
THE APPROVED VALUES ARE STATED IN THE "OPERATING MANUALS" SPECIFIC TO THE AIRLINE OPERATING THE AIRCRAFT.

N_AC_030302_1_0100101_01_00

Take-Off Weight Limitation - ISA +15°C (+27°F) Conditions
LEAP-1A Series Engine
FIGURE-3-3-2-991-010-A01

****ON A/C A321neo**

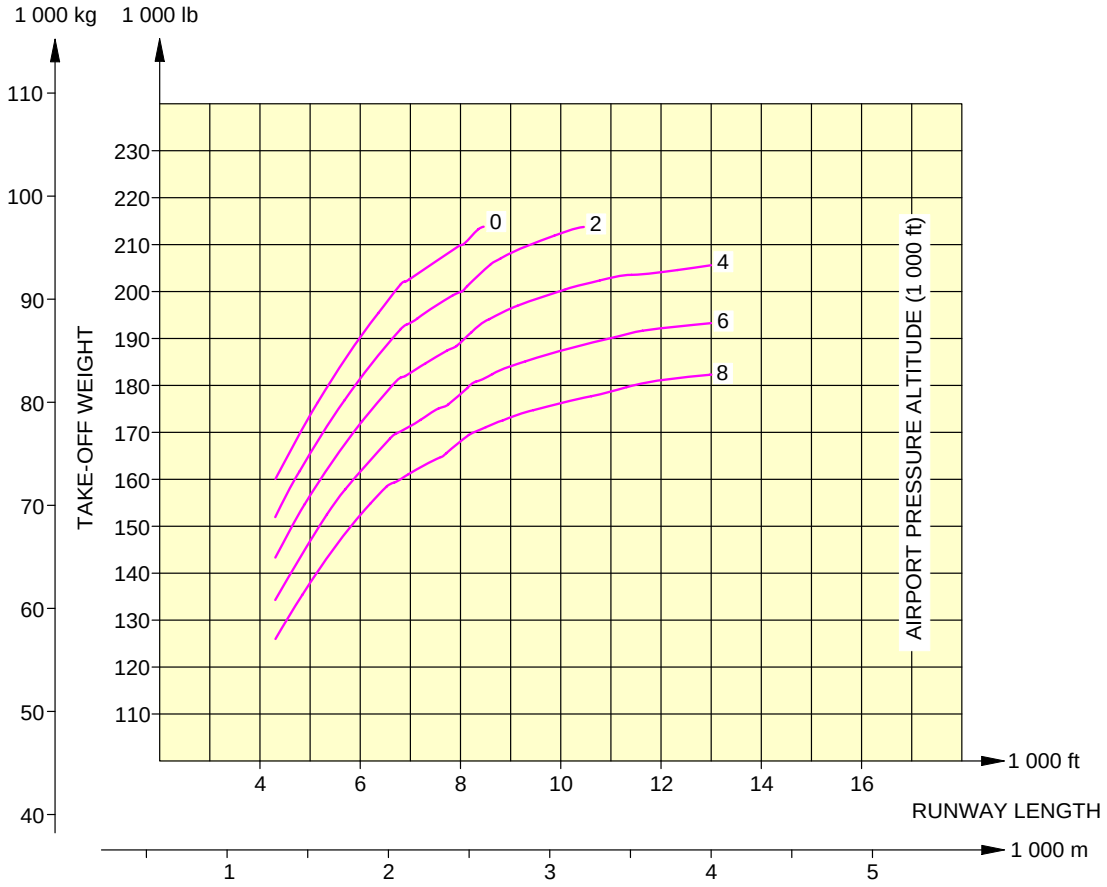

NOTE:
THESE CURVES ARE GIVEN FOR INFORMATION ONLY.
THE APPROVED VALUES ARE STATED IN THE "OPERATING MANUALS" SPECIFIC TO THE AIRLINE OPERATING THE AIRCRAFT.

N_AC_030302_1_0110101_01_00

Take-Off Weight Limitation - ISA +15°C (+27°F) Conditions
PW Engines
FIGURE-3-3-2-991-011-A01

3-3-3 Aerodrome Reference Code

****ON A/C A321-100 A321-200 A321neo**

Aerodrome Reference Code

1. A321-100, A321-200 and A321neo are classified as code 4C as per ICAO Aerodrome Reference Code.

3-4-1 Landing Field Length - ISA Conditions

****ON A/C A321-100 A321-200 A321neo**

Landing Field Length - ISA Conditions

1. This section provides the landing field length.

****ON A/C A321-100 A321-200**

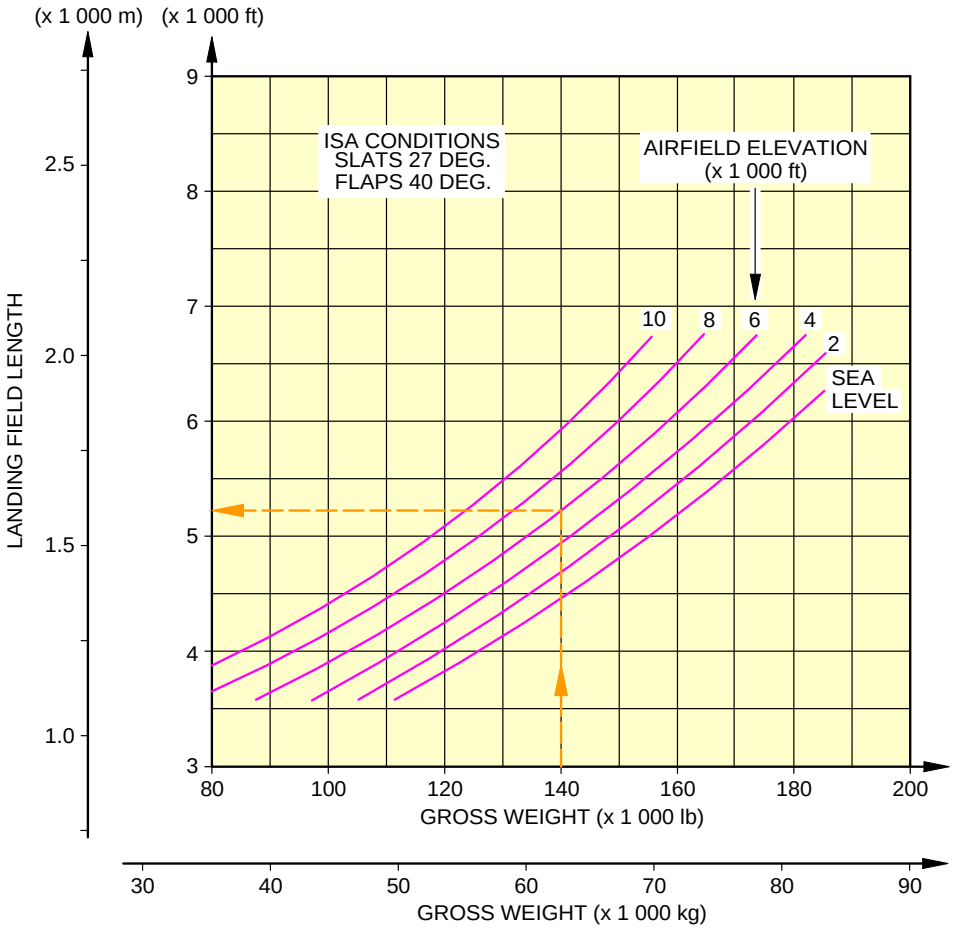

NOTE:
THESE CURVES ARE GIVEN FOR INFORMATION ONLY.
THE APPROVED VALUES ARE STATED IN THE "OPERATING MANUALS" SPECIFIC TO THE AIRLINE OPERATING THE AIRCRAFT.

N_AC_030401_1_0070101_01_01

Landing Field Length - ISA Conditions
CFM56 Series Engine
FIGURE-3-4-1-991-007-A01

****ON A/C A321-100 A321-200**

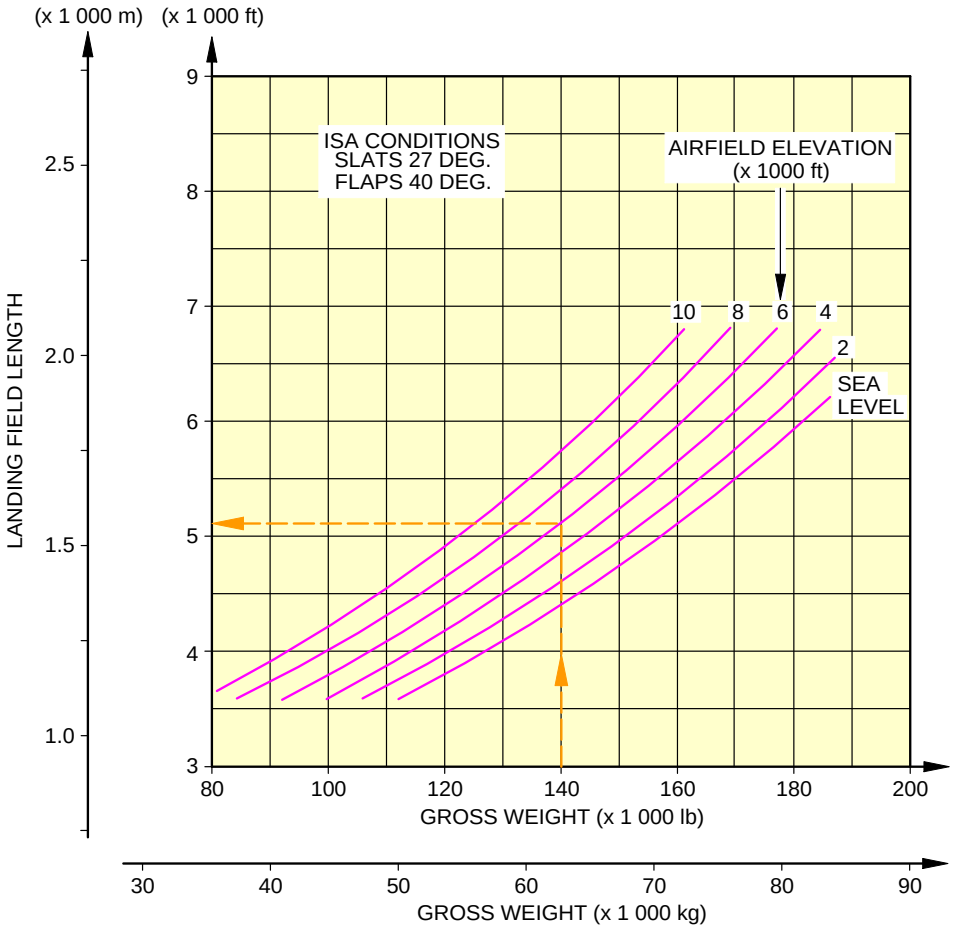

NOTE:
THESE CURVES ARE GIVEN FOR INFORMATION ONLY.
THE APPROVED VALUES ARE STATED IN THE "OPERATING MANUALS" SPECIFIC TO THE AIRLINE OPERATING THE AIRCRAFT.

N_AC_030401_1_0080101_01_01

Landing Field Length - ISA Conditions
IAE V2500 Series Engine
FIGURE-3-4-1-991-008-A01

****ON A/C A321neo**

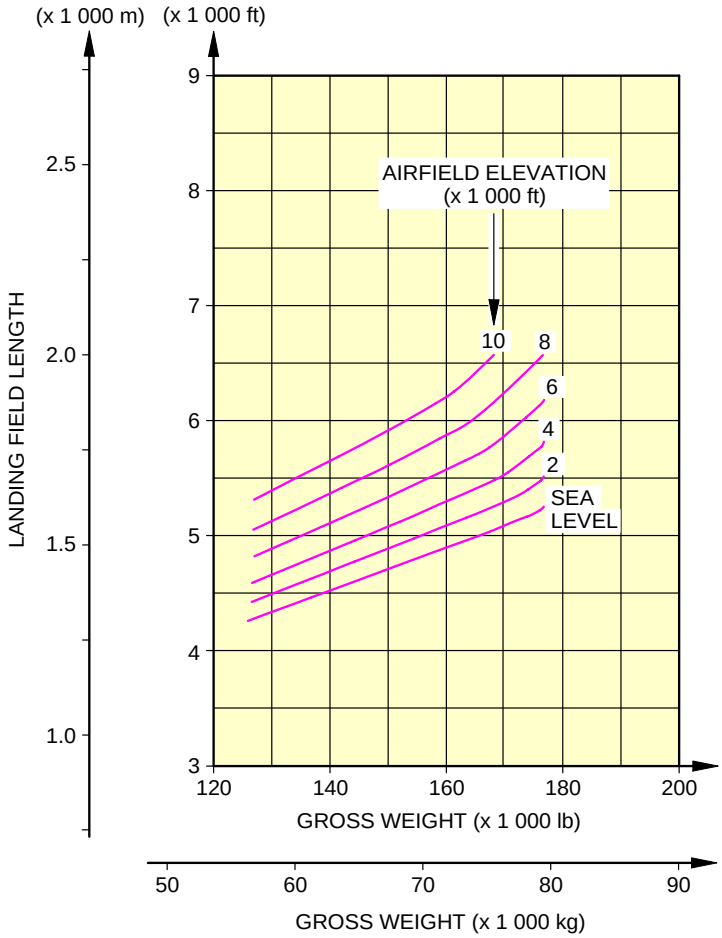

NOTE:
THESE CURVES ARE GIVEN FOR INFORMATION ONLY.
THE APPROVED VALUES ARE STATED IN THE "OPERATING MANUALS" SPECIFIC TO THE AIRLINE OPERATING THE AIRCRAFT.

N_AC_030401_1_0090101_01_00

Landing Field Length - ISA Conditions
Leap Engines
FIGURE-3-4-1-991-009-A01

****ON A/C A321neo**

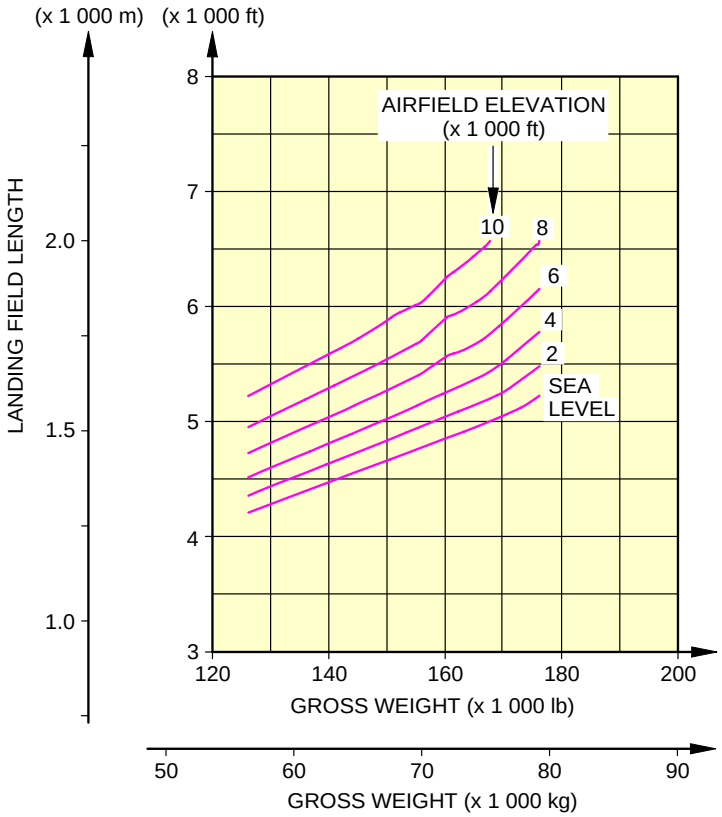

NOTE:
THESE CURVES ARE GIVEN FOR INFORMATION ONLY.
THE APPROVED VALUES ARE STATED IN THE "OPERATING MANUALS" SPECIFIC TO THE AIRLINE OPERATING THE AIRCRAFT.

N_AC_030401_1_0100101_01_00

Landing Field Length - ISA Conditions
PW Engines
FIGURE-3-4-1-991-010-A01

3-5-0 Final Approach Speed

****ON A/C A321-100 A321-200 A321neo**

Final Approach Speed

****ON A/C A321-100 A321-200**

1. Final Approach Speed

   A. This section gives the final approach speed which is the indicated airspeed at threshold in the landing configuration at the certificated maximum flap setting and Maximum Landing Weight (MLW) at standard atmospheric conditions. The approach speed is used to classify the aircraft into Aircraft Approach Category, a grouping of aircraft based on the indicated airspeed at threshold.

   B. The final approach speed is 140 kt at a MLW of 75 500 kg (166 449 lb) and classifies the aircraft into the Aircraft Approach Category C.

      NOTE : This value is given for information only.

   C. The final approach speed is 142 kt at a MLW of 77 800 kg (171 520 lb) and classifies the aircraft into the Aircraft Approach Category D.

      NOTE : This value is given for information only.

****ON A/C A321neo**

2. Final Approach Speed

   A. This section gives the final approach speed which is the indicated airspeed at threshold in the landing configuration at the certificated maximum flap setting and MLW at standard atmospheric conditions. The approach speed is used to classify the aircraft into Aircraft Approach Category, a grouping of aircraft based on the indicated airspeed at threshold.

   B. The final approach speed is 136 kt at a MLW of 79 200 kg (174 606 lb) and classifies the aircraft into the Aircraft Approach Category C.

      NOTE : This value is given for information only.

GROUND MANEUVERING

4-1-0 General Information

****ON A/C A321-100 A321-200 A321neo A321neo-XLR**

General Information

1. This section provides aircraft turning capability and maneuvering characteristics.

   For ease of presentation, this data has been determined from the theoretical limits imposed by the geometry of the aircraft, and where noted, provides for a normal allowance for tire slippage. As such, it reflects the turning capability of the aircraft in favorable operating circumstances. This data should only be used as a guideline for the method of determination of such parameters and for the maneuvering characteristics of this aircraft type.

   In ground operating mode, varying airline practices may demand that more conservative turning procedures be adopted to avoid excessive tire wear and reduce possible maintenance problems. Airline operating techniques will vary in the level of performance, over a wide range of operating circumstances throughout the world. Variations from standard aircraft operating patterns may be necessary to satisfy physical constraints within the maneuvering area, such as adverse grades, limited area or a high risk of jet blast damage. For these reasons, ground maneuvering requirements should be coordinated with the airlines in question prior to layout planning.

4-2-0 Turning Radii

****ON A/C A321-100 A321-200 A321neo A321neo-XLR**

Turning Radii

1. This section provides the turning radii.

**ON A/C A321-100 A321-200 A321neo A321neo-XLR

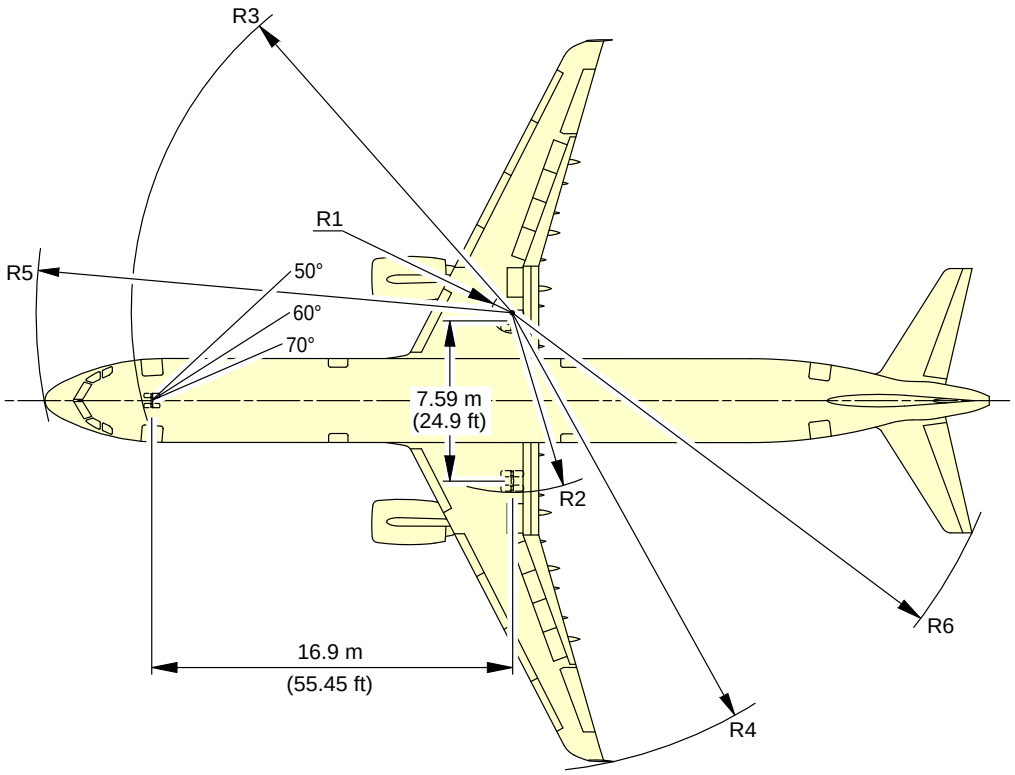

NOTE:

FOR STEERING DIMENSION TABLE SEE SHEET 2.
APPLICABLE FOR A321-100 AND A321-200.

DEPENDING ON AIRCRAFT CONFIGURATION.

TURN TYPE:
1. ASYMMETRIC THRUST DIFFERENTIAL BRAKING
(PIVOTTING ON ONE MAIN GEAR).
2. SYMMETRIC THRUST NO BRAKING.

N_AC_040200_1_0070101_01_03

Turning Radii, No Slip Angle
(Sheet 1)
FIGURE-4-2-0-991-007-A01

****ON A/C A321-100 A321-200 A321neo A321neo-XLR**

TURN TYPE	MAXIMUM RAMP WEIGHT		R1 RMLG		R2 LMLG		R3 NLG		R4 - WING						R5 NOSE		R6 THS	
	STEERING ANGLE (deg)	EFFECTIVE STEERING ANGLE (deg)	m	ft	m	ft	m	ft	WINGTIP FENCE		SHARKLET				m	ft	m	ft
									m	ft	m	ft						
2	20	19.6	44.3	145	51.9	170	50.7	166	64.7	212	65.5	215			52.3	172	57.9	190
2	25	24.5	34.0	112	41.6	136	41.1	135	54.3	178	55.2	181			43.1	141	48.5	159
2	30	29.4	26.9	88	34.5	113	34.7	114	47.3	155	48.1	158			37.2	122	42.2	139
2	35	34.3	21.7	71	29.3	96	30.3	99	42.1	138	42.9	141			33.1	109	37.8	124
2	40	39.2	17.6	58	25.2	83	27.0	89	38.1	125	38.9	128			30.2	99	34.6	114
2	45	44.0	14.4	47	22.0	72	24.6	81	34.8	114	35.6	117			28.1	92	32.1	105
2	50	48.8	11.7	38	19.3	63	22.7	74	32.1	105	32.9	108			26.5	87	30.2	99
2	55	53.6	9.4	31	16.9	56	21.2	70	29.8	98	30.7	101			25.3	83	28.6	94
2	60	58.3	7.3	24	14.9	49	20.0	66	27.8	91	28.6	94			24.3	80	27.4	90
2	65	63.0	5.5	18	13.1	43	19.1	63	26.1	85	26.9	88			23.6	77	26.3	86
2	70	67.4	3.9	13	11.5	38	18.4	61	24.5	80	25.3	83			23.1	76	25.4	83
2	75 (MAX)	71.6	2.5	8	10.1	33	17.9	59	23.1	76	23.9	78			22.7	74	24.7	81
1	50	49.1	11.5	38	19.1	63	22.6	74	32.0	105	32.8	108			26.4	87	30.1	99
1	55	54.0	9.2	30	16.8	55	21.1	69	29.7	97	30.5	100			25.2	83	28.5	94
1	60	58.8	7.1	23	14.7	48	19.9	65	27.6	91	28.5	93			24.2	80	27.2	89
1	65	63.6	5.3	17	12.9	42	19.0	62	25.8	85	26.6	87			23.5	77	26.2	86
1	70	68.4	3.6	12	11.2	37	18.3	60	24.1	79	25.0	82			23.0	75	25.3	83
1	75 (MAX)	73.1	2.0	7	9.6	32	17.8	58	22.6	74	23.4	77			22.6	74	24.5	80

NOTE: ABOVE 50°, AIRLINES MAY USE TYPE 1 OR TYPE 2 TURNS DEPENDING ON THE SITUATION.
TYPE 1 TURNS USE: ASYMMETRIC THRUST DURING THE WHOLE TURN; AND DIFFERENTIAL BRAKING TO INITIATE THE TURN ONLY.
TYPE 2 TURNS USE: SYMMETRIC THRUST DURING THE WHOLE TURN; AND NO DIFFERENTIAL BRAKING AT ALL.
IT IS POSSIBLE TO GET LOWER VALUES THAN THOSE FROM TYPE 1 BY APPLYING DIFFERENTIAL BRAKING DURING THE WHOLE TURN.

N_AC_040200_1_0080101_01_01

Turning Radii, No Slip Angle
(Sheet 2)
FIGURE-4-2-0-991-008-A01

4-3-0 Minimum Turning Radii

****ON A/C A321-100 A321-200 A321neo A321neo-XLR**

Minimum Turning Radii

1. This section provides the minimum turning radii.

**ON A/C A321-100 A321-200 A321neo A321neo-XLR

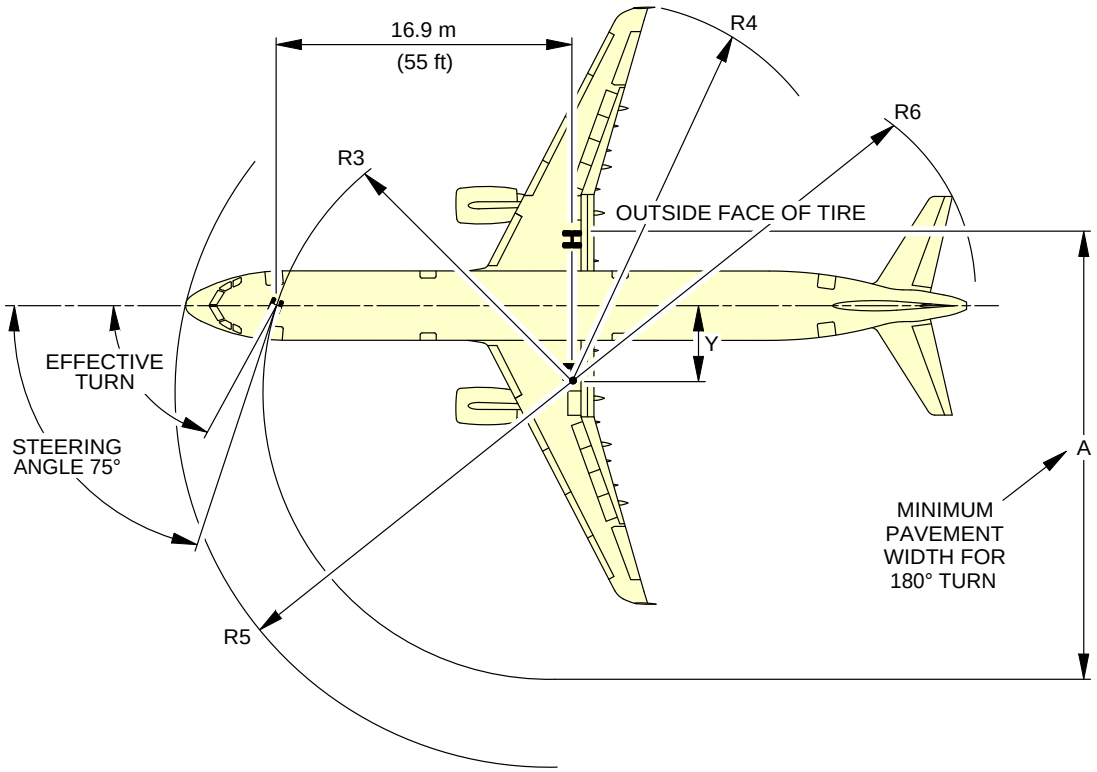

TYPE OF TURN	STEERING ANGLE (DEG)	EFFECTIVE STEERING ANGLE		Y	A	R3 NLG	R4 WING		R5 NOSE	R6 THS
							WING TIP FENCE	SHARKLET		
1	75 (MAX)	73.1°	m	5.1	27.7	17.8	22.6	23.4	22.6	24.5
			ft	17	91	58	74	77	74	80
2	75 (MAX)	71.6°	m	5.6	28.3	17.9	23.1	23.9	22.7	24.7
			ft	18	93	59	76	78	74	81

NOTE:

DEPENDING ON AIRCRAFT CONFIGURATION.

NOSE GEAR RADII TRACK MEASURED FROM OUTSIDE FACE OF TIRE.
THEORETICAL CENTER OF TURN FOR MINIMUM TURNING RADIUS.
SLOW CONTINUOUS TURNING, APPROXIMATELY IDLE THRUST ON ALL ENGINES.
NO DIFFERENTIAL BRAKING.

IT IS POSSIBLE TO GET LOWER VALUES THAN THOSE FROM TYPE 1
BY APPLYING DIFFERENTIAL BRAKING DURING THE WHOLE TURN.

N_AC_040300_1_0040101_01_03

Minimum Turning Radii
FIGURE-4-3-0-991-004-A01

4-4-0 Visibility from Cockpit in Static Position

****ON A/C A321-100 A321-200 A321neo A321neo-XLR**

Visibility from Cockpit in Static Position

1. This section gives the visibility from cockpit in static position.

**ON A/C A321-100 A321-200 A321neo A321neo-XLR

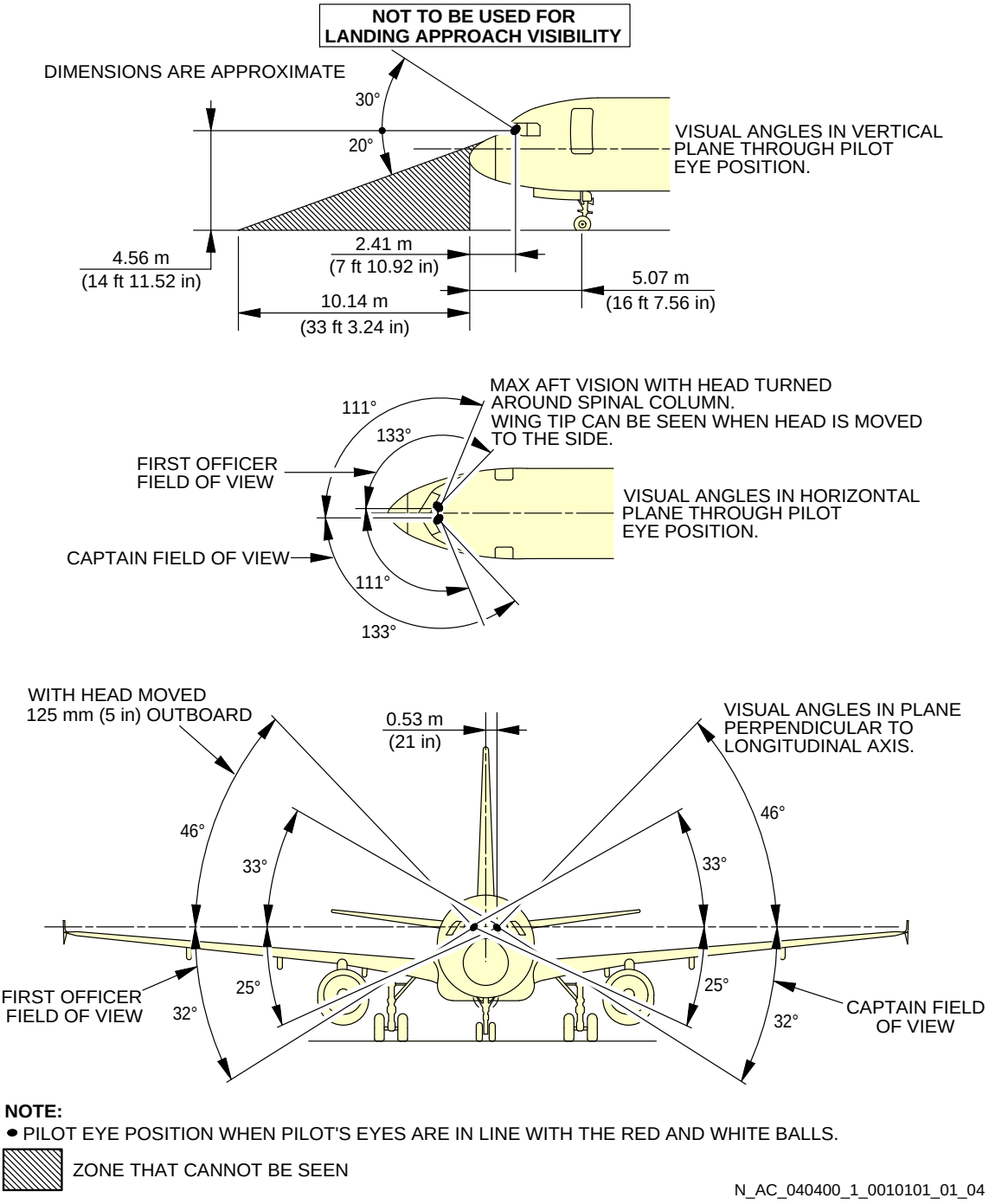

NOTE:

- PILOT EYE POSITION WHEN PILOT'S EYES ARE IN LINE WITH THE RED AND WHITE BALLS.

ZONE THAT CANNOT BE SEEN

N_AC_040400_1_0010101_01_04

Visibility from Cockpit in Static Position
FIGURE-4-4-0-991-001-A01

**ON A/C A321-100 A321-200 A321neo A321neo-XLR

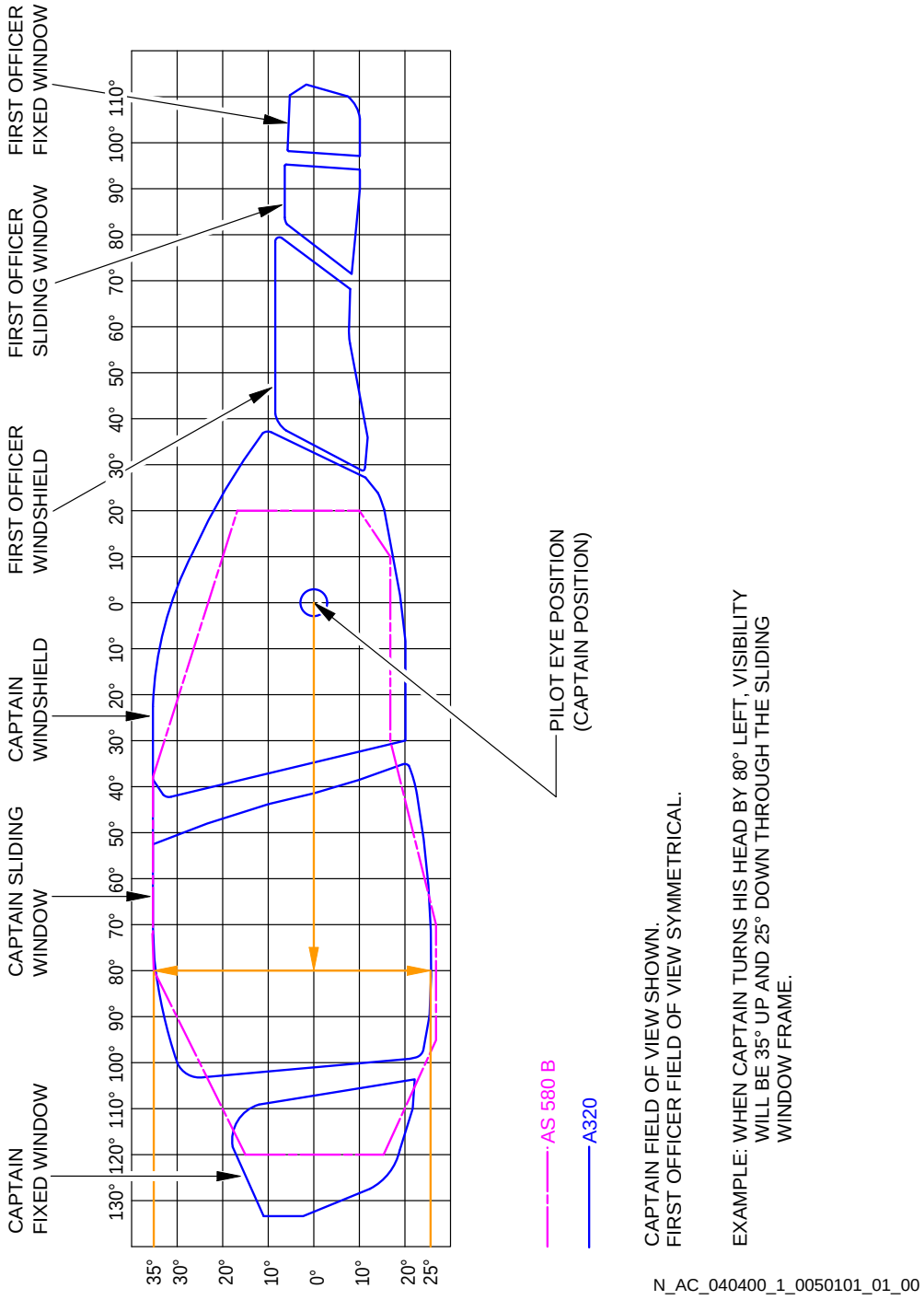

Binocular Visibility Through Windows from Captain Eye Position
FIGURE-4-4-0-991-005-A01

4-5-0 Runway and Taxiway Turn Paths

****ON A/C A321-100 A321-200 A321neo A321neo-XLR**

Runway and Taxiway Turn Paths

1. Runway and Taxiway Turn Paths.

4-5-1 135° Turn - Runway to Taxiway

****ON A/C A321-100 A321-200 A321neo A321neo-XLR**

135° Turn - Runway to Taxiway

1. This section gives the 135° turn - runway to taxiway.

**ON A/C A321-100 A321-200 A321neo A321neo-XLR

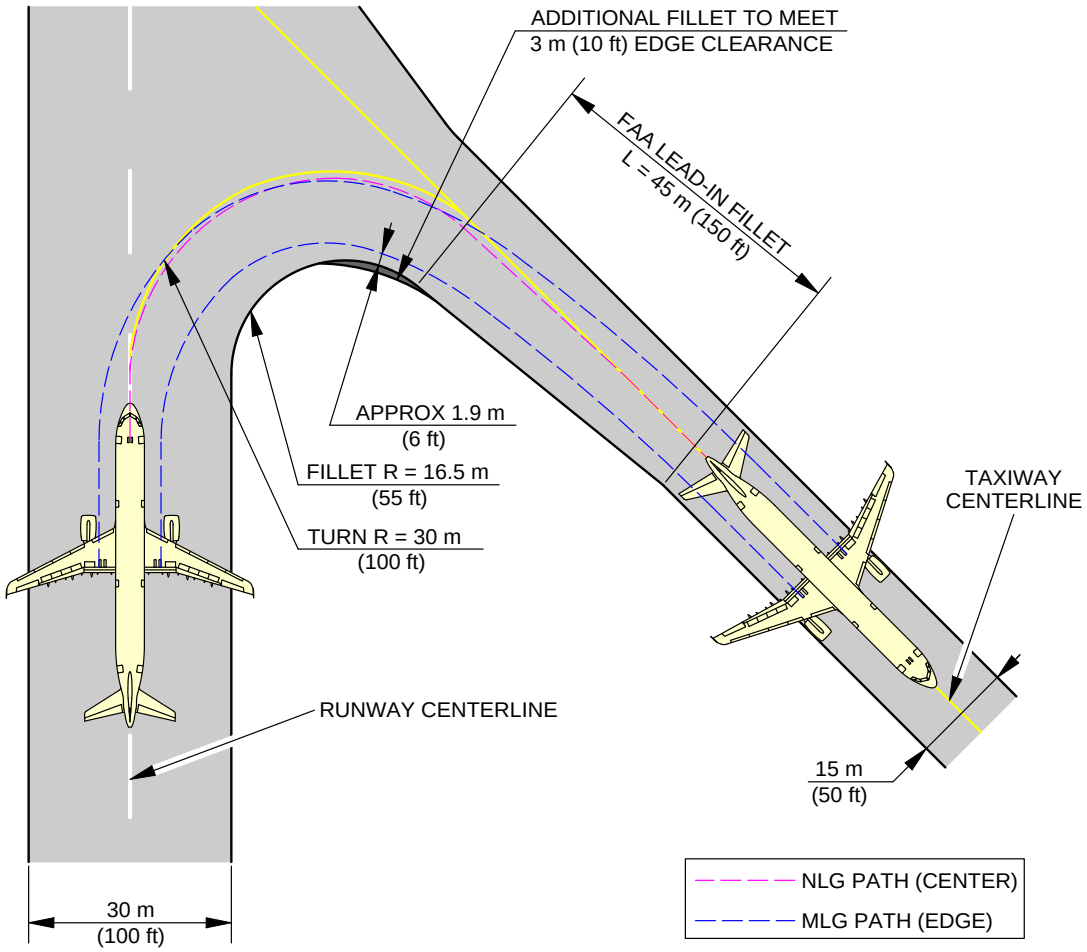

NOTE:
FAA GROUP III FACILITIES.
DEPENDING ON AIRCRAFT CONFIGURATION.

N_AC_040501_1_0060101_01_04

135° Turn - Runway to Taxiway
Cockpit Over Centerline Method
FIGURE-4-5-1-991-006-A01

**ON A/C A321-100 A321-200 A321neo A321neo-XLR

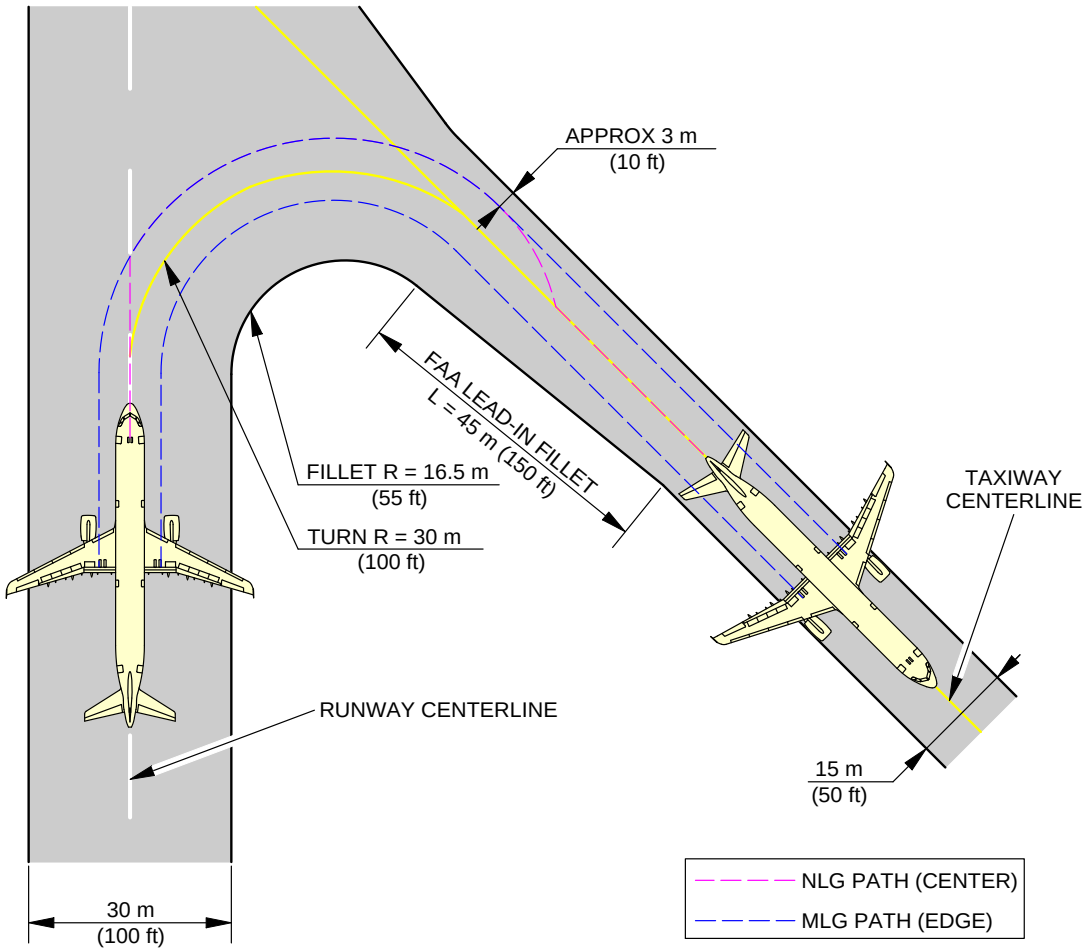

NOTE:
FAA GROUP III FACILITIES.
DEPENDING ON AIRCRAFT CONFIGURATION.

N_AC_040501_1_0070101_01_04

135° Turn - Runway to Taxiway
Judgemental Oversteering Method
FIGURE-4-5-1-991-007-A01

4-5-2 90° Turn - Runway to Taxiway

****ON A/C A321-100 A321-200 A321neo A321neo-XLR**

90° Turn - Runway to Taxiway

1. This section gives the 90° turn - runway to taxiway.

**ON A/C A321-100 A321-200 A321neo A321neo-XLR

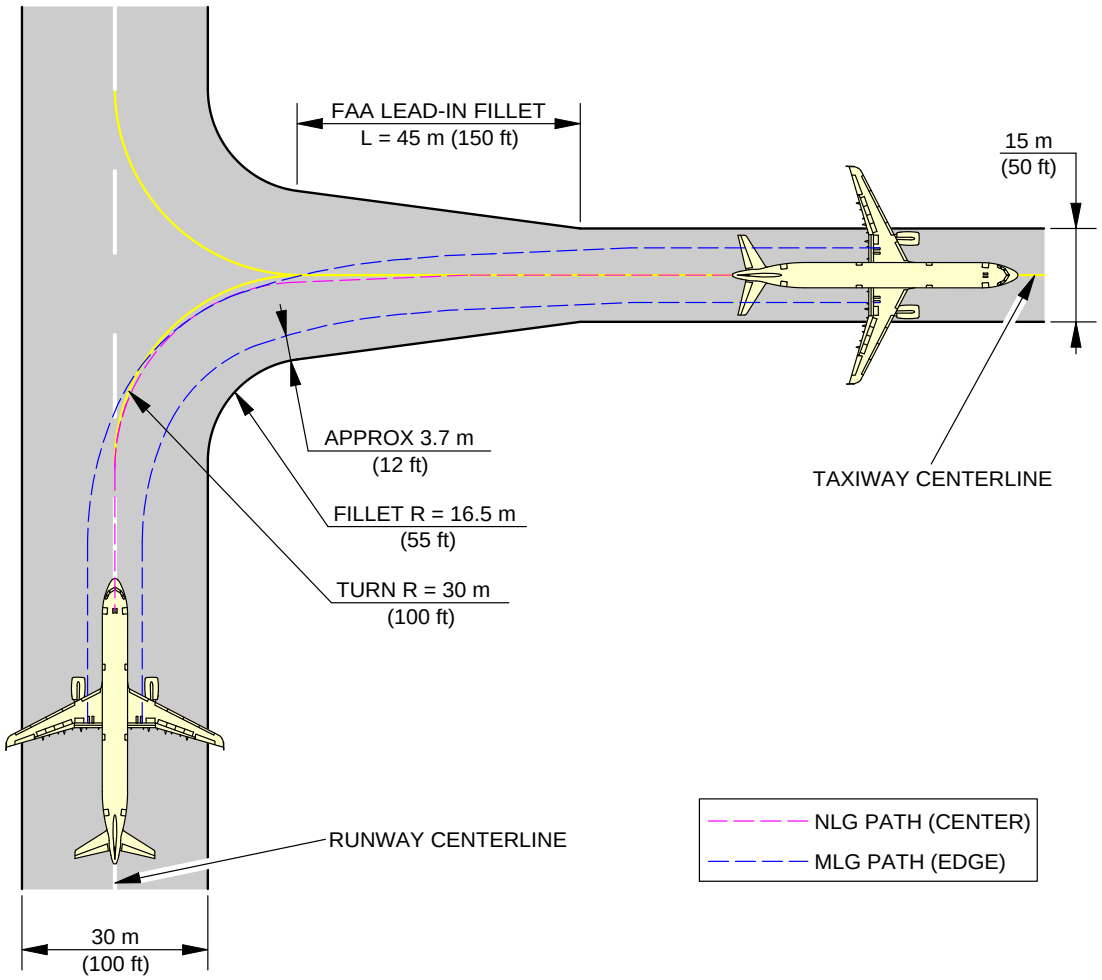

NOTE:
FAA GROUP III FACILITIES.
DEPENDING ON AIRCRAFT CONFIGURATION.

N_AC_040502_1_0060101_01_04

90° Turn - Runway to Taxiway
Cockpit Over Centerline Method
FIGURE-4-5-2-991-006-A01

**ON A/C A321-100 A321-200 A321neo A321neo-XLR

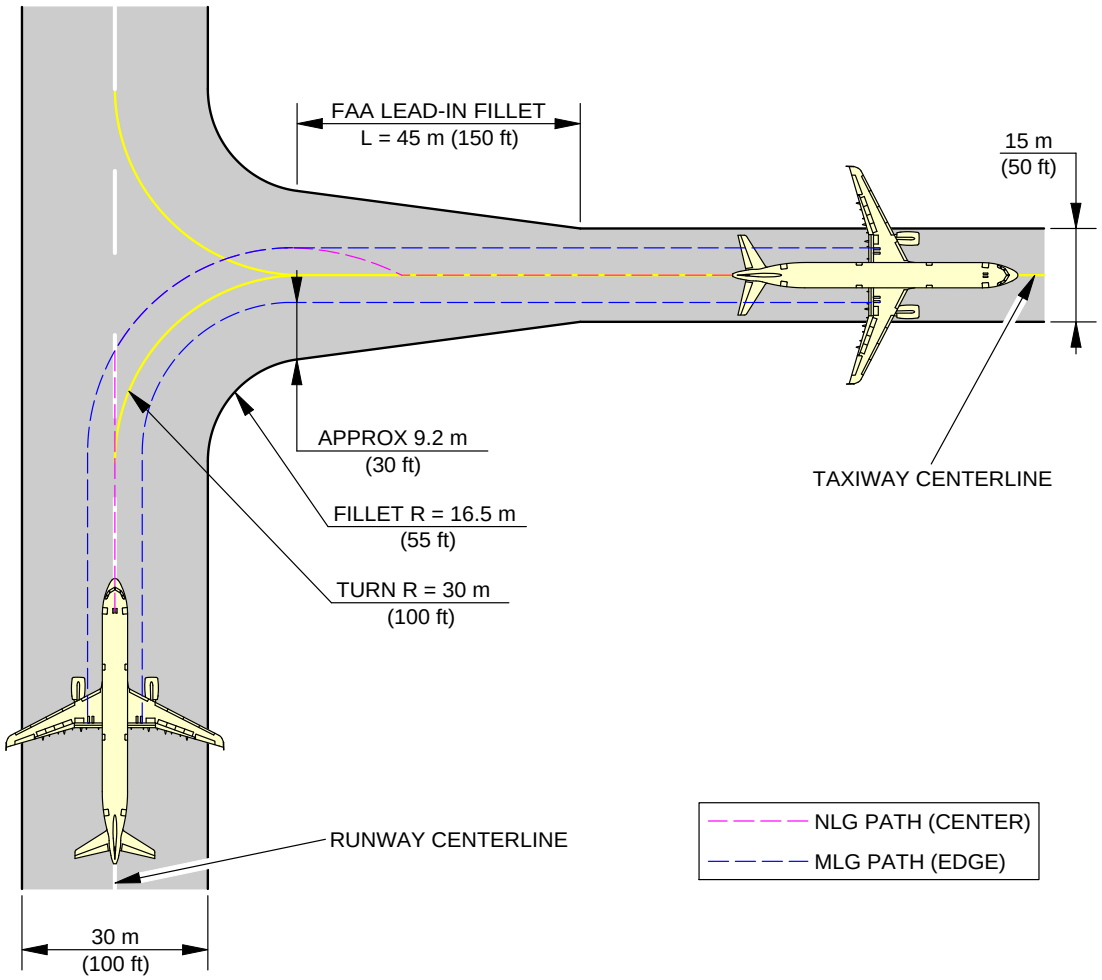

NOTE:
FAA GROUP III FACILITIES.
DEPENDING ON AIRCRAFT CONFIGURATION.

N_AC_040502_1_0070101_01_04

90° Turn - Runway to Taxiway
Judgemental Oversteering Method
FIGURE-4-5-2-991-007-A01

4-5-3 180° Turn on a Runway

****ON A/C A321-100 A321-200 A321neo A321neo-XLR**

180° Turn on a Runway

1. This section provides the 180° turn on a runway.

**ON A/C A321-100 A321-200 A321neo A321neo-XLR

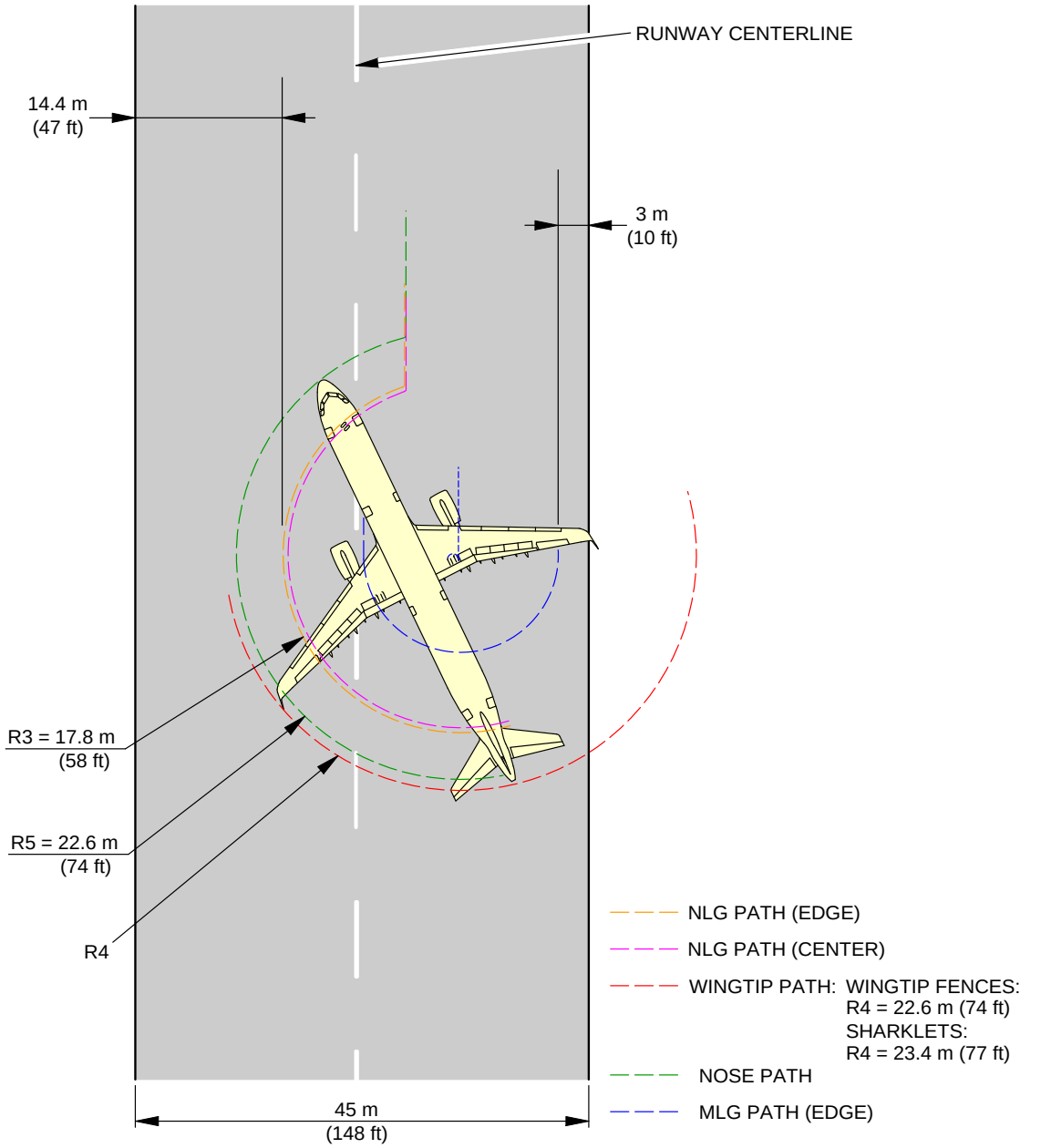

NOTE:
DEPENDING ON AIRCRAFT CONFIGURATION.

N_AC_040503_1_0020101_01_06

180° Turn on a Runway
Edge of Runway Method (Sheet 1 of 2)
FIGURE-4-5-3-991-002-A01

**ON A/C A321-100 A321-200 A321neo A321neo-XLR

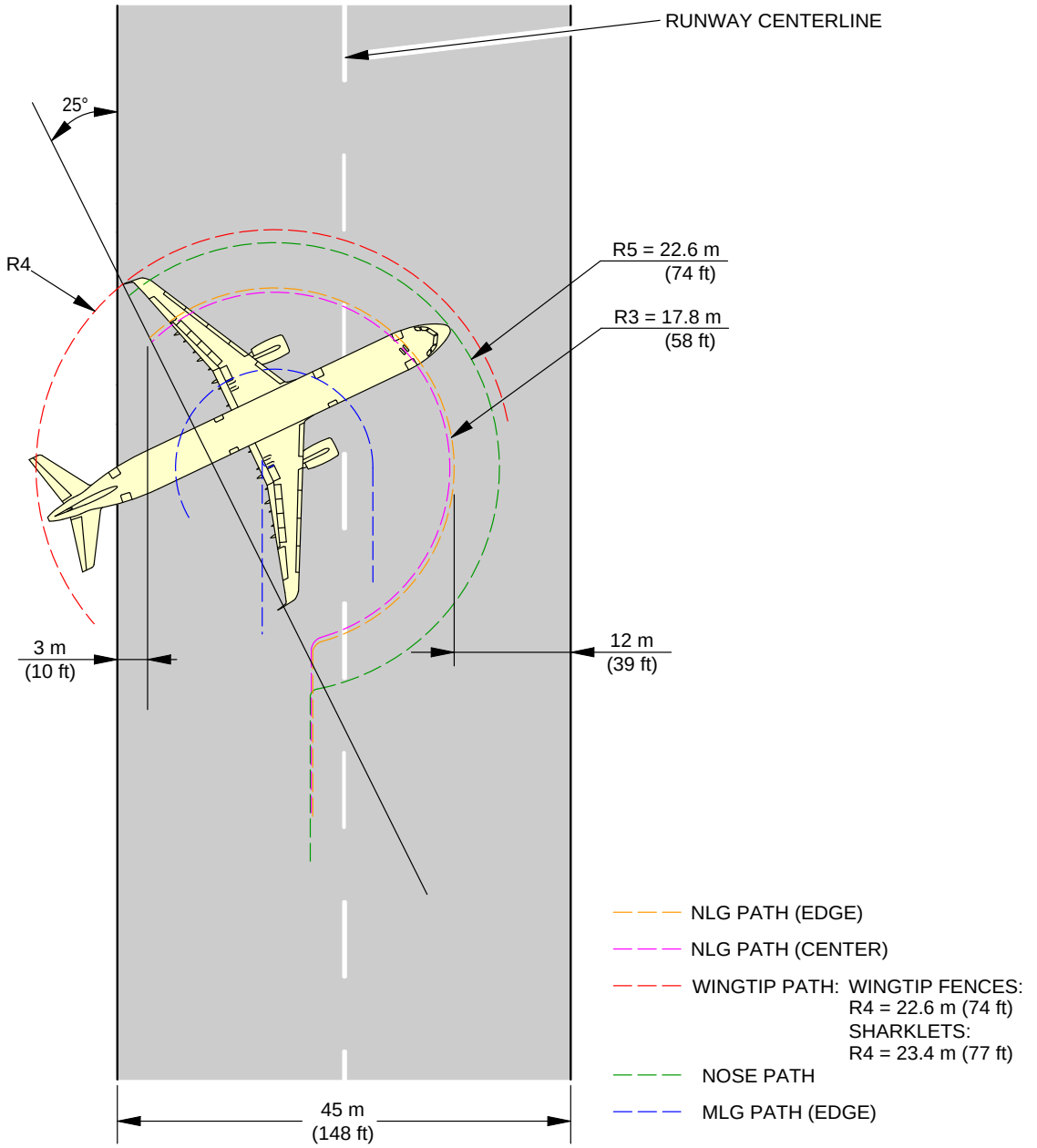

NOTE:
DEPENDING ON AIRCRAFT CONFIGURATION.

N_AC_040503_1_0020102_01_04

180° Turn on a Runway
Center of Runway Method (Sheet 2 of 2)
FIGURE-4-5-3-991-002-A01

4-5-4 135° Turn - Taxiway to Taxiway

****ON A/C A321-100 A321-200 A321neo A321neo-XLR**

135° Turn - Taxiway to Taxiway

1. This section gives the 135° turn - taxiway to taxiway.

**ON A/C A321-100 A321-200 A321neo A321neo-XLR

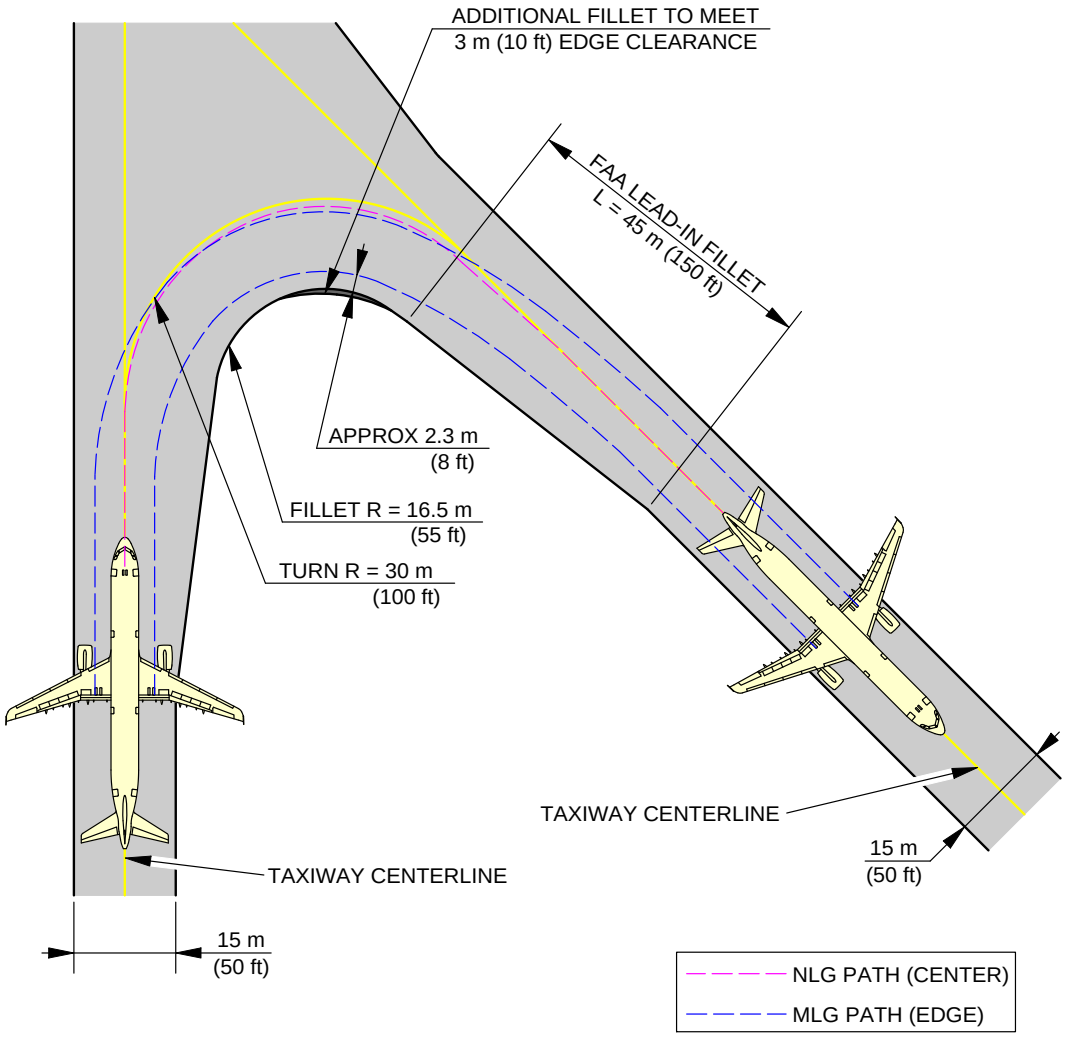

NOTE:
FAA GROUP III FACILITIES.
DEPENDING ON AIRCRAFT CONFIGURATION.

N_AC_040504_1_0070101_01_02

135° Turn - Taxiway to Taxiway
Cockpit Over Centerline Method (Sheet 1 of 2)
FIGURE-4-5-4-991-007-A01

**ON A/C A321-100 A321-200 A321neo A321neo-XLR

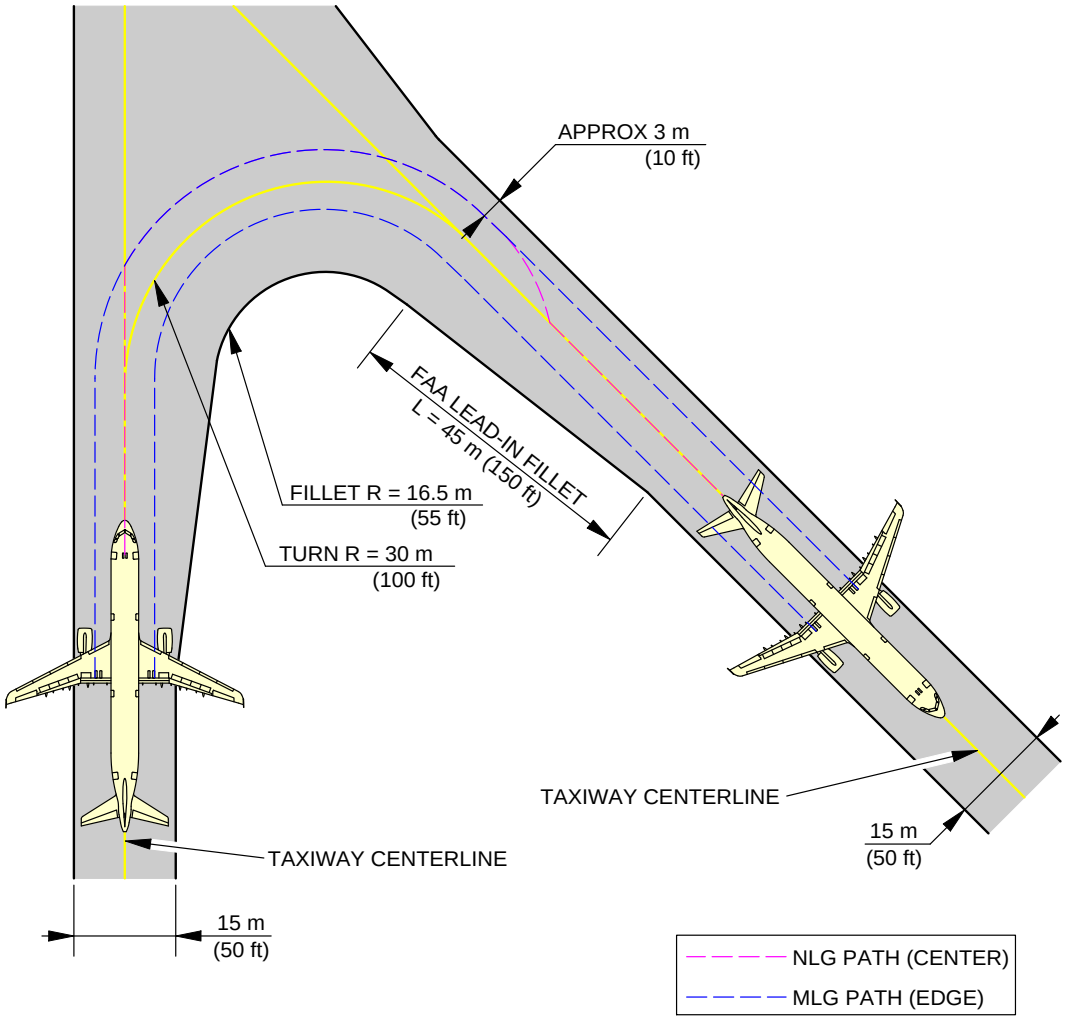

NOTE:
FAA GROUP III FACILITIES.
DEPENDING ON AIRCRAFT CONFIGURATION.

N_AC_040504_1_0070102_01_02

135° Turn - Taxiway to Taxiway
Judgemental Oversteering Method (Sheet 2 of 2)
FIGURE-4-5-4-991-007-A01

4-5-5 90° Turn - Taxiway to Taxiway

****ON A/C A321-100 A321-200 A321neo A321neo-XLR**

90° Turn - Taxiway to Taxiway

1. This section gives the 90° turn - taxiway to taxiway.

**ON A/C A321-100 A321-200 A321neo A321neo-XLR

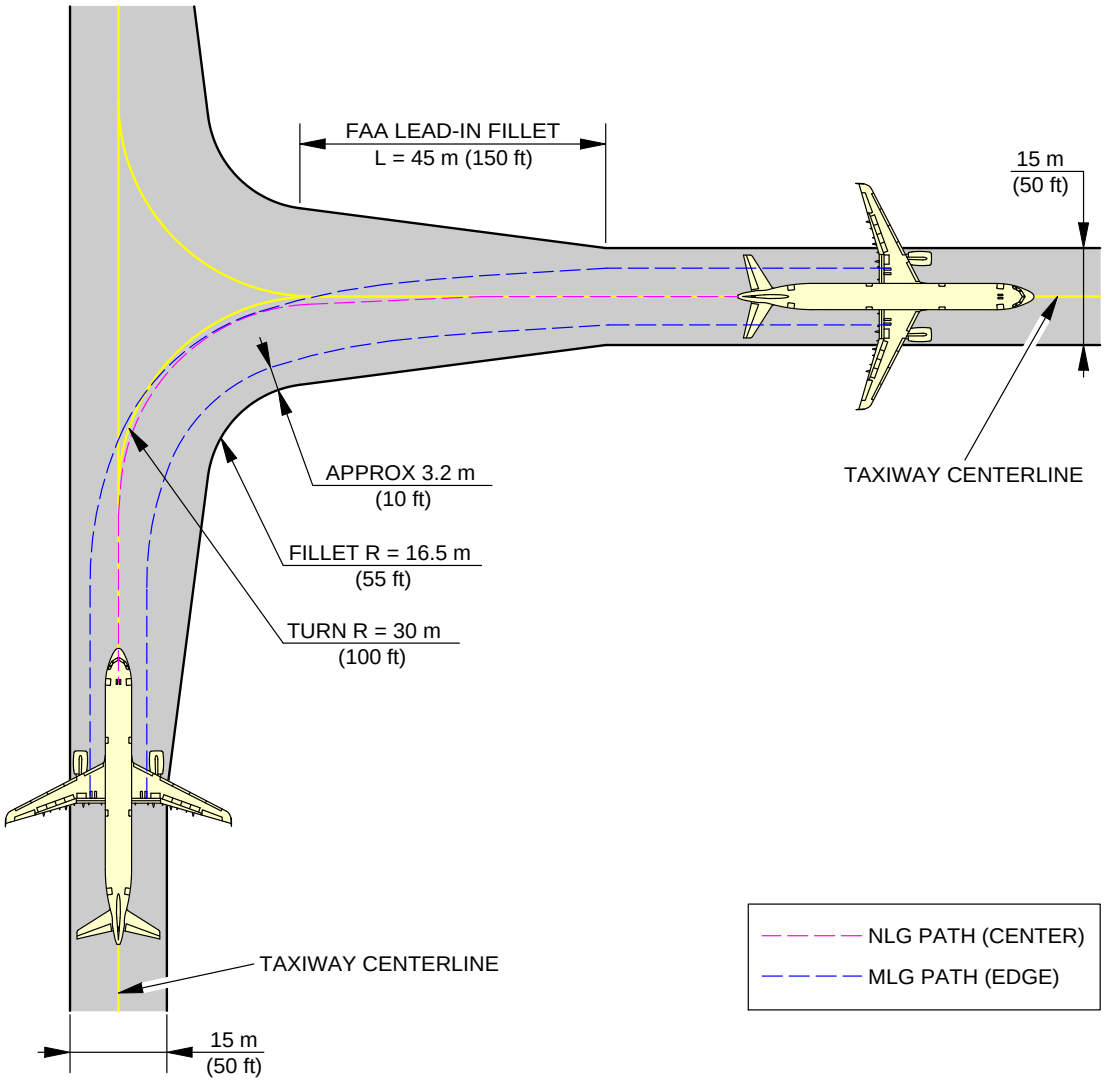

NOTE:
FAA GROUP III FACILITIES.
DEPENDING ON AIRCRAFT CONFIGURATION.

N_AC_040505_1_0040101_01_02

90° Turn - Taxiway to Taxiway
Cockpit Over Centerline Method (Sheet 1 of 2)
FIGURE-4-5-5-991-004-A01

**ON A/C A321-100 A321-200 A321neo A321neo-XLR

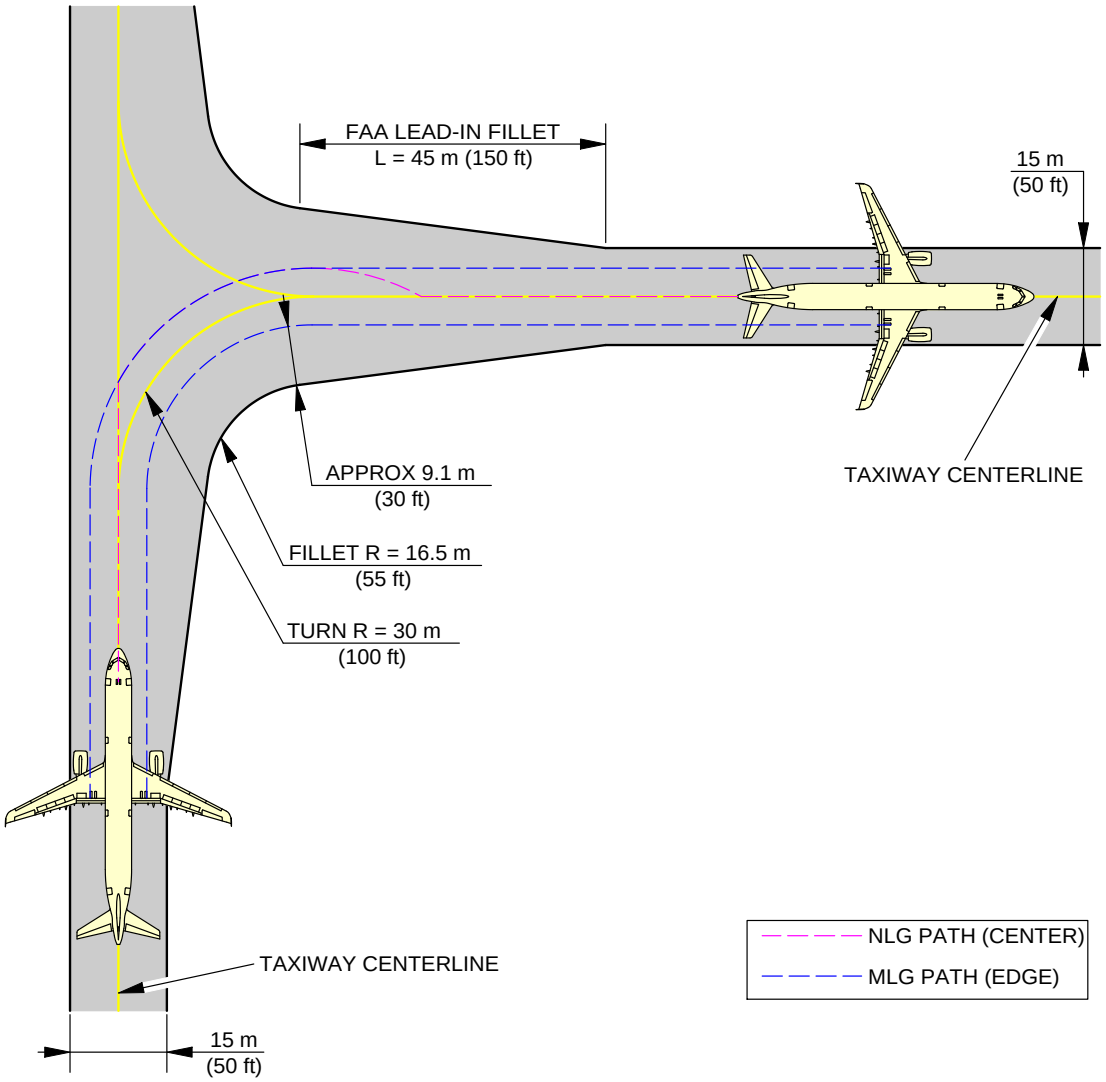

NOTE:
FAA GROUP III FACILITIES.
DEPENDING ON AIRCRAFT CONFIGURATION.

N_AC_040505_1_0040102_01_02

90° Turn - Taxiway to Taxiway
Judgemental Oversteering Method (Sheet 2 of 2)
FIGURE-4-5-5-991-004-A01

4-6-0 Runway Holding Bay (Apron)

****ON A/C A321-100 A321-200 A321neo A321neo-XLR**

Runway Holding Bay (Apron)

1. This section gives the runway holding bay (Apron).

**ON A/C A321-100 A321-200 A321neo A321neo-XLR

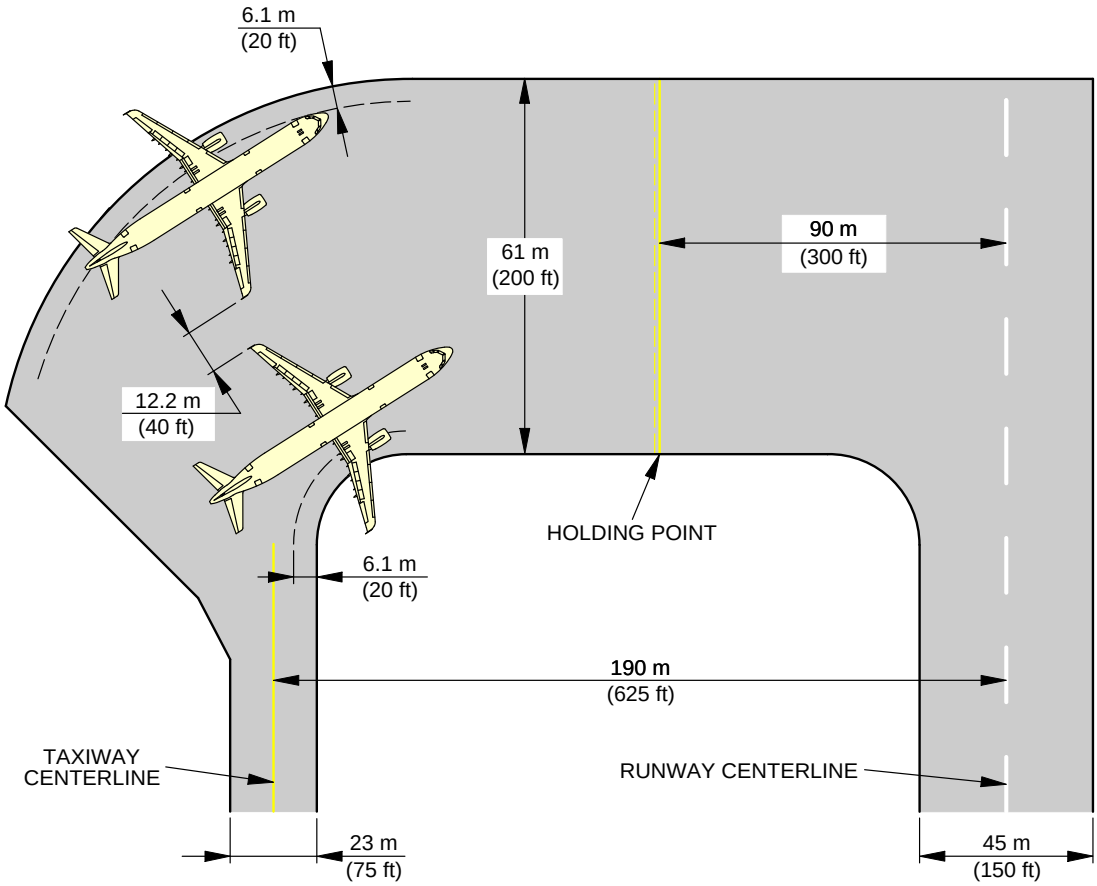

NOTE:

APPLICABLE FOR A321-100 AND A321-200.

DEPENDING ON AIRCRAFT CONFIGURATION.

N_AC_040600_1_0040101_01_03

Runway Holding Bay (Apron)
FIGURE-4-6-0-991-004-A01

4-7-0 Minimum Line-Up Distance Corrections

****ON A/C A321-100 A321-200 A321neo A321neo-XLR**

Minimum Line-Up Distance Corrections

1. The ground maneuvers were performed using asymmetric thrust and differential braking only to initiate the turn.

   TODA: Take-Off Distance Available
   ASDA: Acceleration-Stop Distance Available

2. 90° Turn on Runway Entry

   This section gives the minimum line-up distance correction for a 90° turn on runway entry.
   This maneuver consists in a 90° turn at minimum turn radius. It starts with the edge of the MLG at a distance of 3 m (10 ft) from the taxiway edge, and finishes with the aircraft aligned on the centerline of the runway, see FIGURE 4-7-0-991-020-A.
   During the turn, all the clearances must meet the minimum value of 3 m (10 ft) for this category of aircraft as recommended in ICAO Annex 14.

3. 180° Turn on Runway Turn Pad

   This section gives the minimum line-up distance correction for a 180° turn on the runway turn pad.
   This maneuver consists in a 180° turn at minimum turn radius on a runway turn pad with standard ICAO geometry.
   It starts with the edge of the MLG at a distance of 3 m (10 ft) from the pavement edge, and it finishes with the aircraft aligned on the centerline of the runway, see FIGURE 4-7-0-991-021-A.
   During the turn, all the clearances must meet the minimum value of 3 m (10 ft) for this category of aircraft as recommended in ICAO Annex 14.

4. 180° Turn on Runway Width

   This section gives the minimum line-up distance correction for a 180° turn on the runway width.
   For this maneuver, the pavement width is considered to be the runway width, which is a frozen parameter (30 m (100 ft), 45 m (150 ft) and 60 m (200 ft)).
   As per the standard operating procedures for the ”180° turn on runway” (described in the Flight Crew Operating Manual), the aircraft is initially angled with respect to the runway centerline when starting the 180° turn, see FIGURE 4-7-0-991-022-A.
   The value of this angle depends on the aircraft type and is mentioned in the FCOM.
   During the turn, all the clearances must meet the minimum value of 3 m (10 ft) for this category of aircraft as recommended in ICAO Annex 14.

NOTE : The minimum line-up distances may need a steering angle lower than the maximum one.

**ON A/C A321-100 A321-200 A321neo A321neo-XLR

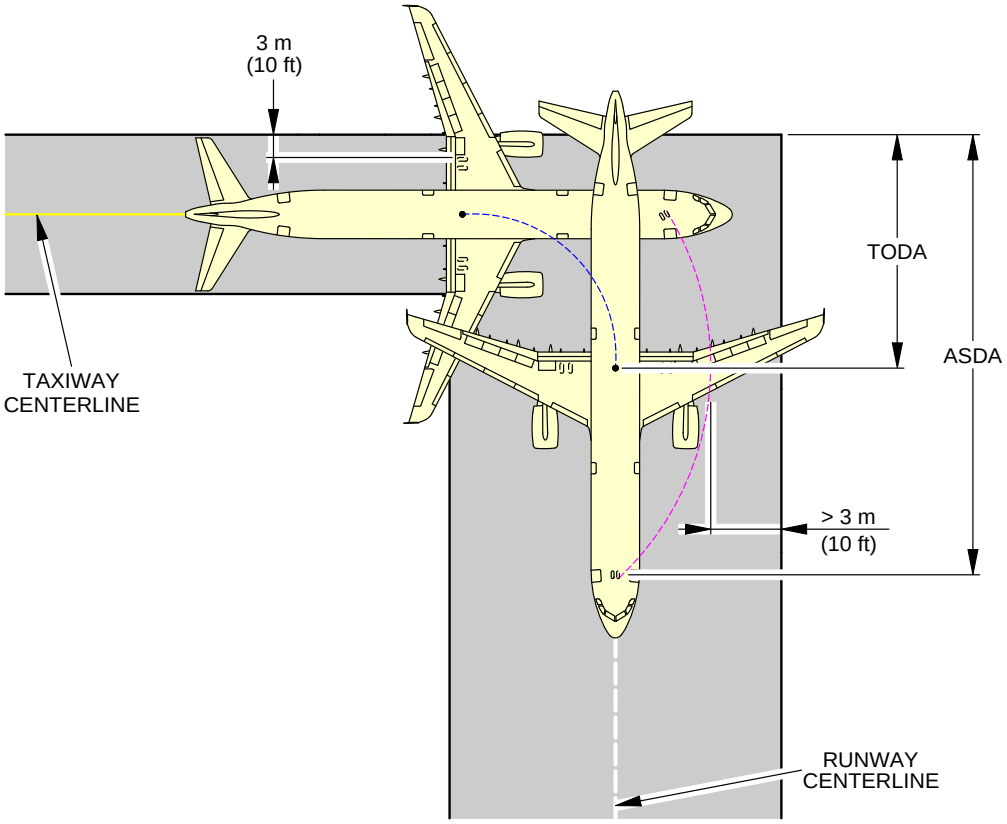

ASDA: ACCELERATION-STOP DISTANCE AVAILABLE
TODA: TAKE-OFF DISTANCE AVAILABLE

90° TURN ON RUNWAY ENTRY									
AIRCRAFT TYPE	MAX STEERING ANGLE	30 m (100 ft) WIDE RUNWAY				45 m (150 ft)/60 m (200 ft) WIDE RUNWAY			
		MINIMUM LINE-UP DISTANCE CORRECTION				MINIMUM LINE-UP DISTANCE CORRECTION			
		ON TODA		ON ASDA		ON TODA		ON ASDA	
A321	75°	13.9 m	46 ft	30.8 m	101 ft	12.6 m	41 ft	29.5 m	97 ft

NOTE:
DEPENDING ON AIRCRAFT CONFIGURATION.

N_AC_040700_1_0200101_01_01

Minimum Line-Up Distance Corrections
90° Turn on Runway Entry
FIGURE-4-7-0-991-020-A01

**ON A/C A321-100 A321-200 A321neo A321neo-XLR

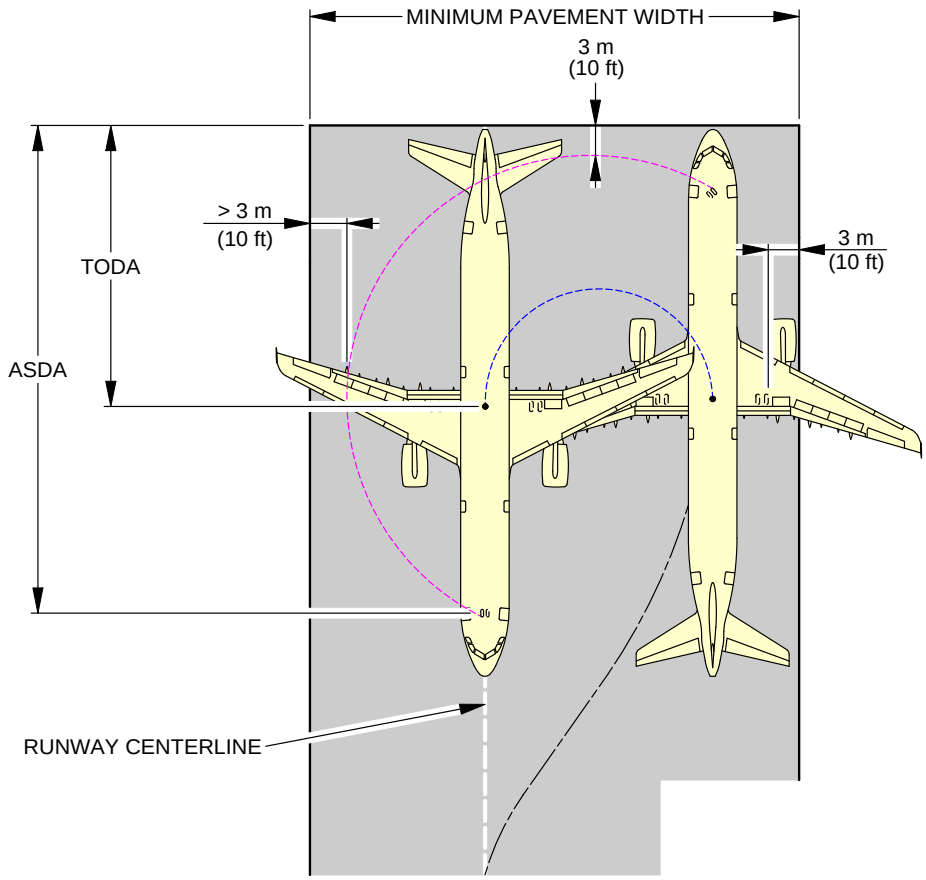

180° TURN ON RUNWAY TURN PAD													
AIRCRAFT TYPE	MAX STEERING ANGLE	30 m (100 ft) WIDE RUNWAY						45 m (150 ft)/60 m (200 ft) WIDE RUNWAY					
		MINIMUM LINE-UP DISTANCE CORRECTION				REQUIRED MINIMUM PAVEMENT WIDTH		MINIMUM LINE-UP DISTANCE CORRECTION				REQUIRED MINIMUM PAVEMENT WIDTH	
		ON TODA		ON ASDA				ON TODA		ON ASDA			
A321	75°	21.4 m	70 ft	38.3 m	126 ft	35.3 m	116 ft	21 m	69 ft	37.9 m	124 ft	40.3 m	132 ft

NOTE:
DEPENDING ON AIRCRAFT CONFIGURATION.

N_AC_040700_1_0210101_01_01

Minimum Line-Up Distance Corrections
180° Turn on Runway Turn Pad
FIGURE-4-7-0-991-021-A01

**ON A/C A321-100 A321-200 A321neo A321neo-XLR

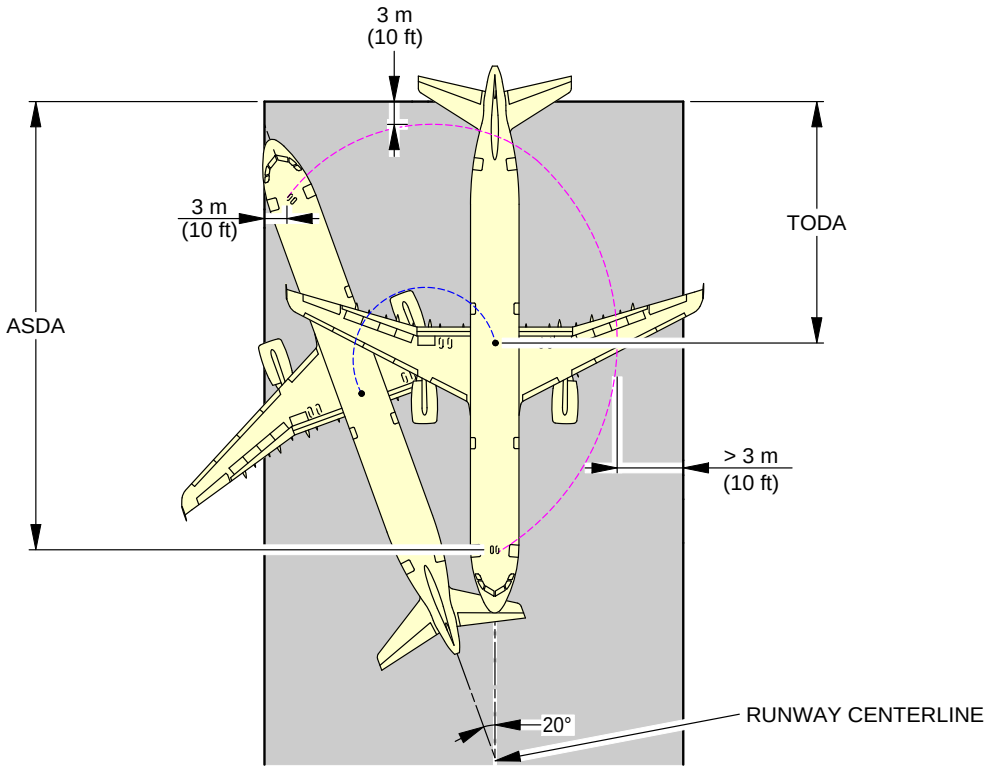

ASDA: ACCELERATION-STOP DISTANCE AVAILABLE
TODA: TAKE-OFF DISTANCE AVAILABLE

180° TURN ON RUNWAY WIDTH							
AIRCRAFT TYPE	MAX STEERING ANGLE	30 m (100 ft) WIDE RUNWAY		45 m (150 ft)/60 m (200 ft) WIDE RUNWAY			
		MINIMUM LINE-UP DISTANCE CORRECTION		MINIMUM LINE-UP DISTANCE CORRECTION			
		ON TODA	ON ASDA	ON TODA		ON ASDA	
A321	75°	NOT POSSIBLE		21.0 m	69 ft	37.9 m	124 ft

NOTE:

DEPENDING ON AIRCRAFT CONFIGURATION.

"NOT POSSIBLE" MEANS THAT IT IS NOT POSSIBLE FOR THE AIRCRAFT TO TURN ON SUCH A RUNWAY WIDTH WITH THE GIVEN ASSUMPTIONS DEFINED IN THIS SECTION (4-7-0) WHILE MAINTAINING THE MINIMUM 3 m (10 ft) MARGIN RECOMMENDED BY ICAO.

N_AC_040700_1_0220101_01_01

Minimum Line-Up Distance Corrections
180° Turn on Runway Width
FIGURE-4-7-0-991-022-A01

4-8-0 Aircraft Mooring

****ON A/C A321-100 A321-200 A321neo A321neo-XLR**

Aircraft Mooring

1. This section provides information on aircraft mooring.

**ON A/C A321-100 A321-200 A321neo A321neo-XLR

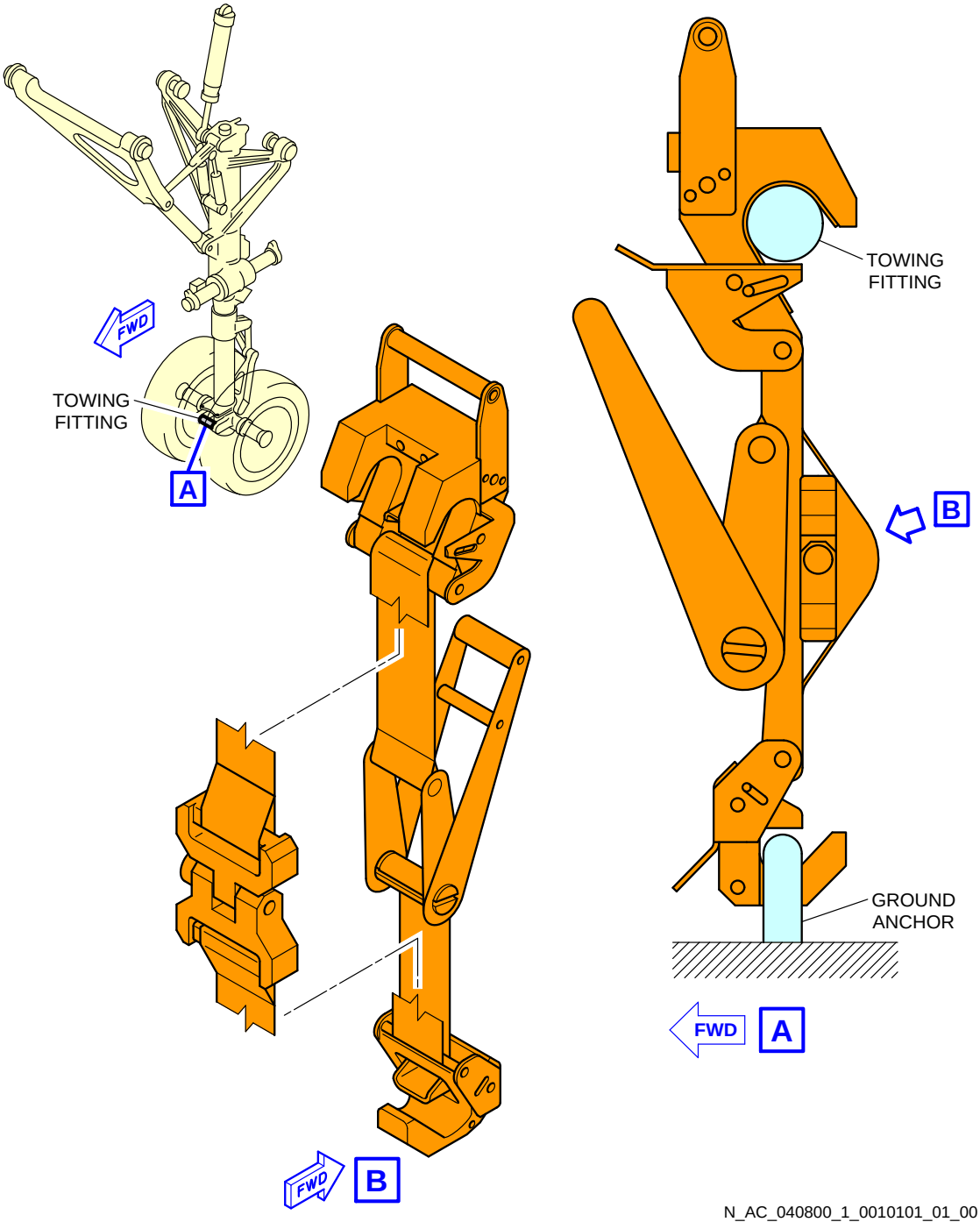

Aircraft Mooring
FIGURE-4-8-0-991-001-A01

TERMINAL SERVICING

5-1-1 Aircraft Servicing Arrangements

****ON A/C A321-100 A321-200 A321neo A321neo-XLR**

Aircraft Servicing Arrangements

1. This section provides typical ramp layouts, showing the various GSE items in position during typical turn-round scenarios.

   These ramp layouts show typical arrangements only. Each operator will have its own specific requirements/regulations for positioning and operation on the ramp.

   This table gives the symbols used on servicing diagrams.

Ground Support Equipment	
AC	AIR CONDITIONING UNIT
AS	AIR START UNIT
BULK	BULK TRAIN
CAT	CATERING TRUCK
CB	CONVEYOR BELT
CLEAN	CLEANING TRUCK
FUEL	FUEL HYDRANT DISPENSER or TANKER
GPU	GROUND POWER UNIT
LDCL	LOWER DECK CARGO LOADER
LV	LAVATORY VEHICLE
PBB	PASSENGER BOARDING BRIDGE
PS	PASSENGER STAIRS
TOW	TOW TRACTOR
ULD	ULD TRAIN
WV	POTABLE WATER VEHICLE

5-1-2 Typical Ramp Layout - Open Apron

****ON A/C A321-100 A321-200 A321neo A321neo-XLR**

Typical Ramp Layout - Open Apron

1. This section gives the typical servicing arrangement for pax version (Open Apron).

   The Stand Safety Line delimits the Aircraft Safety Area (minimum distance of 7.5 m from the aircraft). No vehicle must be parked in this area before complete stop of the aircraft (wheel chocks in position on landing gears).

**ON A/C A321-100 A321-200 A321neo A321neo-XLR

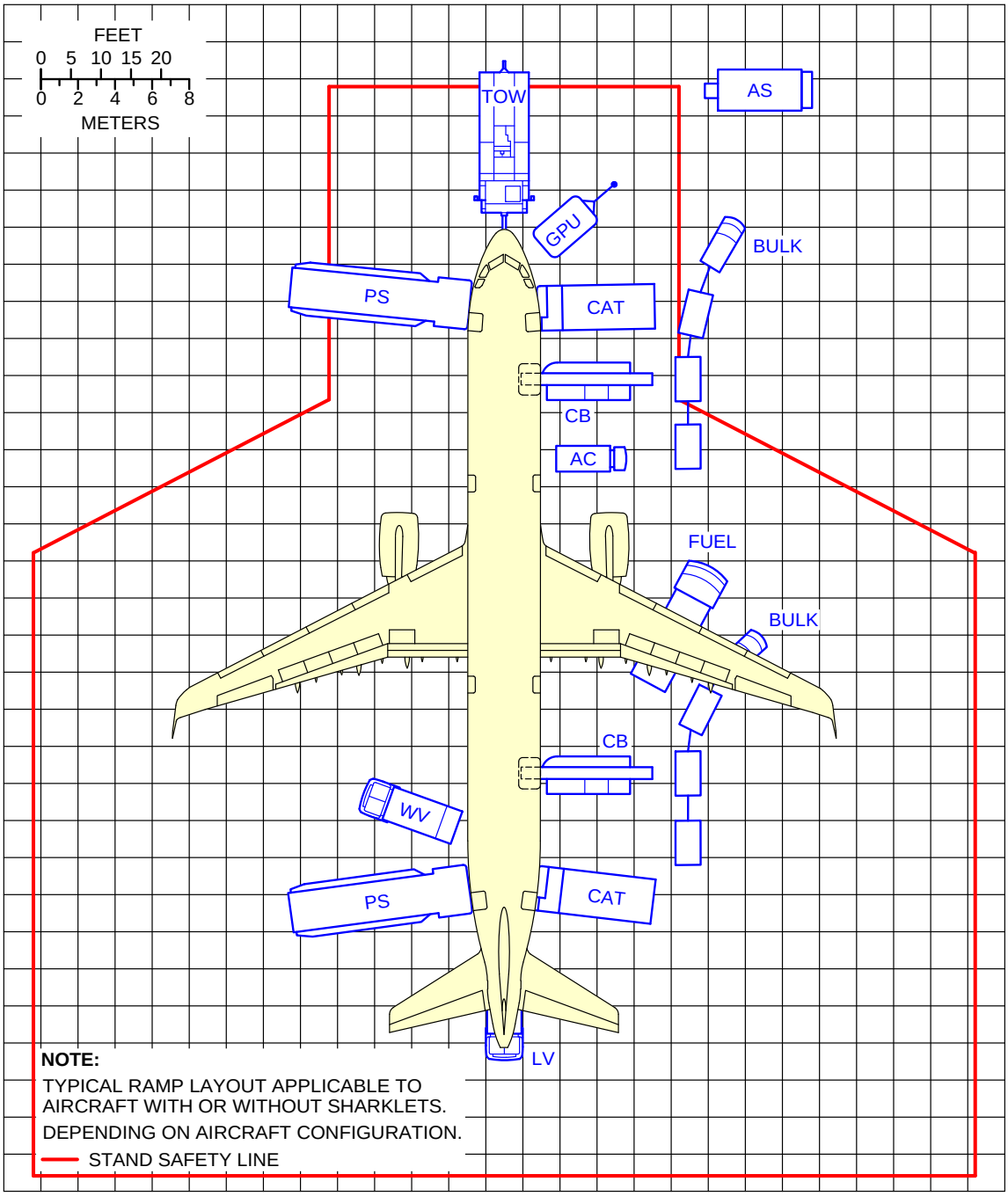

N_AC_050102_1_0050101_01_04

Typical Ramp Layout
Open Apron - Bulk Loading
FIGURE-5-1-2-991-005-A01

**ON A/C A321-100 A321-200 A321neo A321neo-XLR

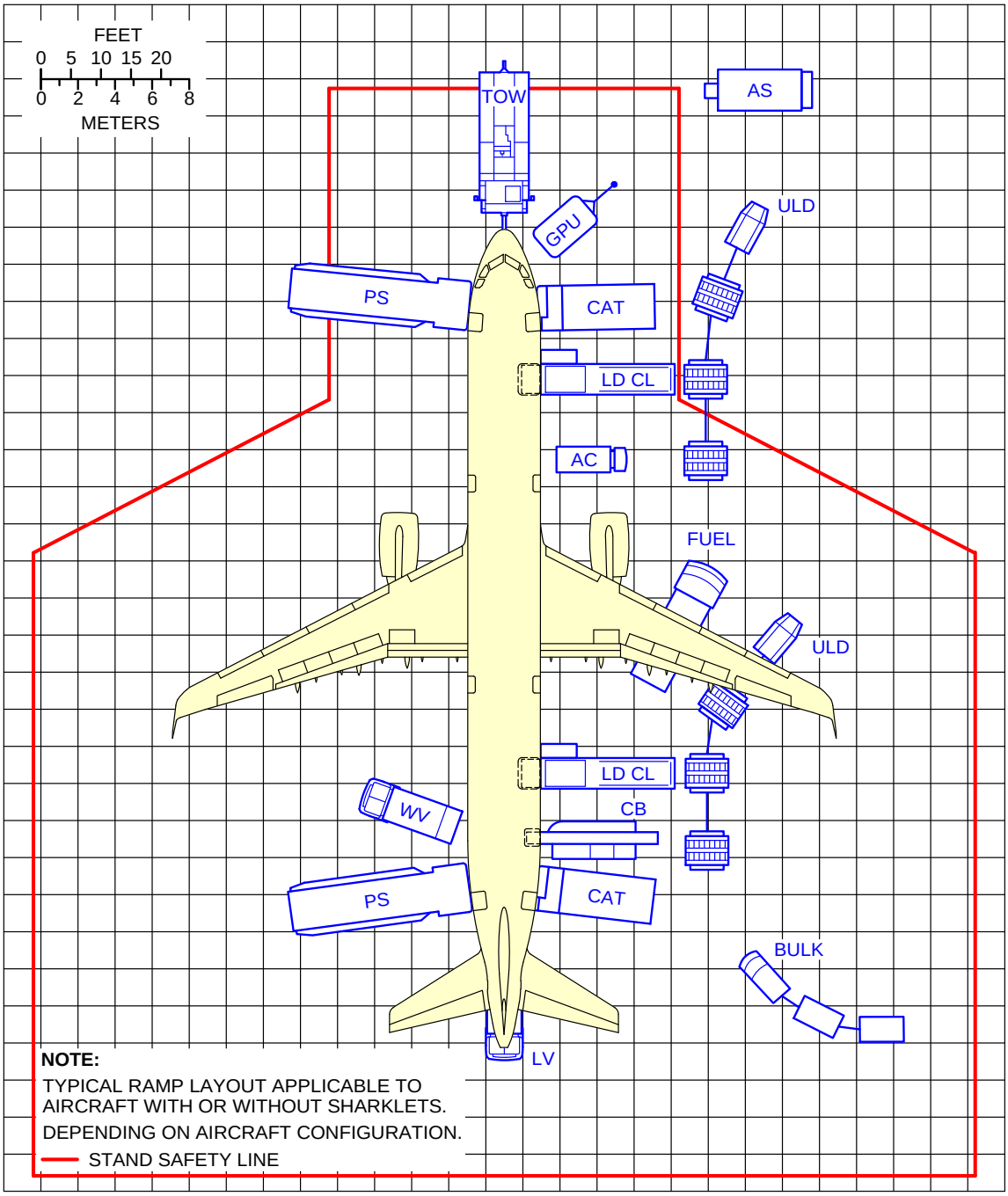

N_AC_050102_1_0100101_01_01

Typical Ramp Layout
Open Apron - ULD Loading
FIGURE-5-1-2-991-010-A01

5-1-3 Typical Ramp Layout - Gate

****ON A/C A321-100 A321-200 A321neo A321neo-XLR**

Typical Ramp Layout - Gate

1. This section gives the typical servicing arrangement for pax version (Passenger Bridge).

   The Stand Safety Line delimits the Aircraft Safety Area (minimum distance of 7.5 m from the aircraft). No vehicle must be parked in this area before complete stop of the aircraft (wheel chocks in position on landing gears).

**ON A/C A321-100 A321-200 A321neo A321neo-XLR

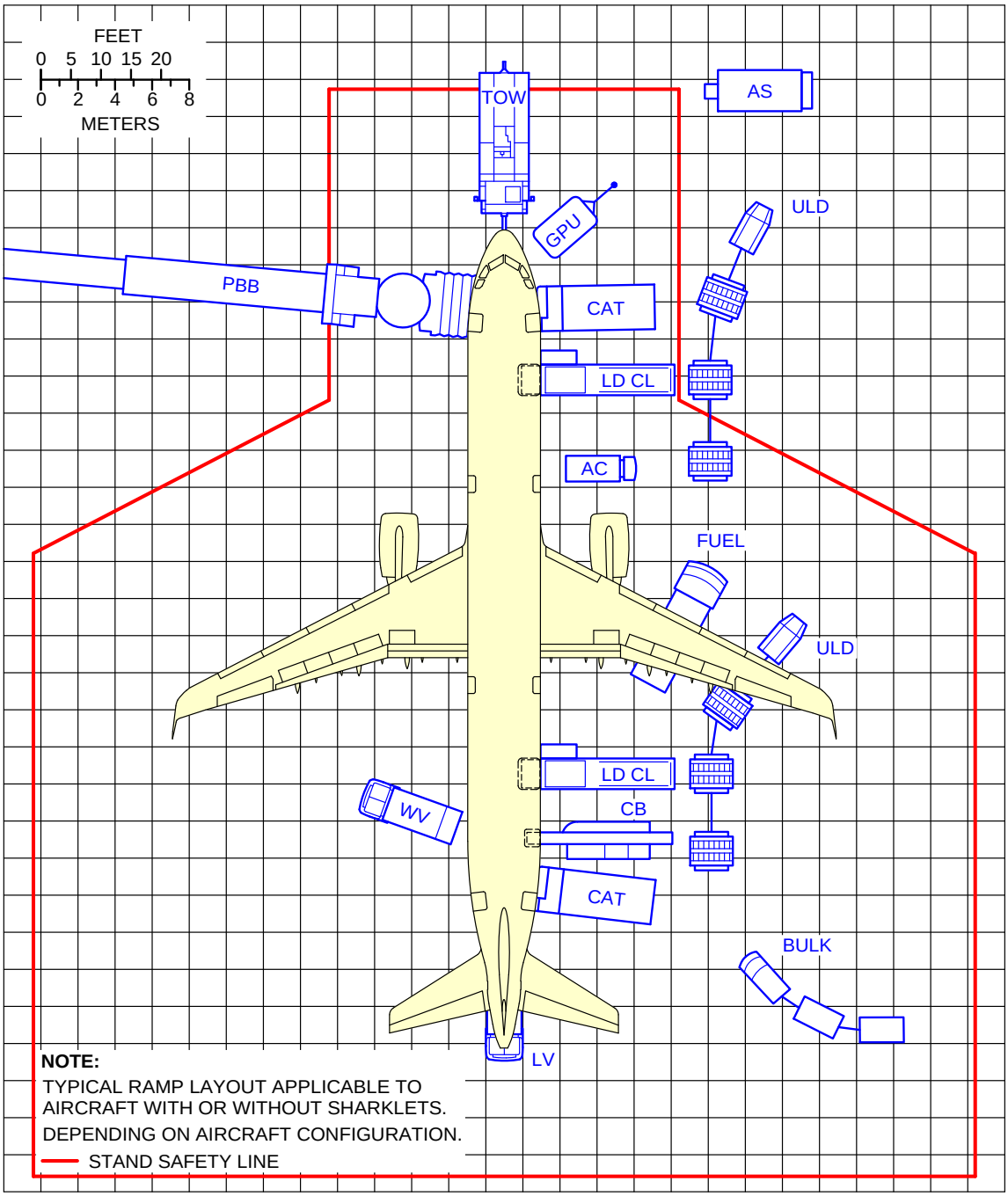

N_AC_050103_1_0030101_01_04

Typical Ramp Layout
Gate
FIGURE-5-1-3-991-003-A01

5-2-0 Terminal Operations - Full Servicing Turn Round Time Chart

****ON A/C A321-100 A321-200 A321neo A321neo-XLR**

Terminal Operations - Full Servicing Turn Round Time

1. This section provides a typical turn round time chart showing the typical time for ramp activities during aircraft turn round.

   Actual times may vary due to each operator's specific practices, resources, equipment and operating conditions.

****ON A/C A321-100 A321-200 A321neo**

2. Assumptions used for full servicing turn round time chart

   FIGURE 5-2-0-991-007-A

   A. PASSENGER HANDLING
   185 pax: 16 F/C + 169 Y/C.
   All passengers deplane and board the aircraft.
   1 Passenger Boarding Bridge (PBB) used at door 1L.
   Equipment positioning + opening door = +2 min.
   Closing door + equipment removal = +1.5 min.
   No Passenger with Reduced Mobility (PRM) on board.

   Deplaning:
   - 185 pax at door 1L
   - Deplaning rate = 20 pax/min
   - Priority deplaning for premium passengers.

   Boarding:
   - 185 pax at door 1L
   - Boarding rate = 12 pax/min
   - Last Pax Seating allowance (LPS) + headcounting = +2 min.

   B. CARGO
   2 cargo loaders + 1 belt loader.
   Opening door + equipment positioning = +2 min.
   Equipment removal + closing door = +1.5 min.

   100% cargo exchange (baggage only):
   - FWD cargo compartment: 5 containers
   - AFT cargo compartment: 5 containers
   - Bulk cargo compartment: 500 kg (1 102 lb).

Container unloading/loading times:
- Unloading = 1.5 min/container
- Loading = 1.5 min/container.

Bulk unloading/loading times:
- Unloading = 150 kg/min (331 lb/min)
- Loading = 120 kg/min (265 lb/min).

C. REFUELING
20 000 l (5 283 US gal) at 50 psig (3.45 bars-rel), one hose (right wing).
Dispenser positioning/removal + connection/disconnection times = +2.5 min.

D. CLEANING
Cleaning is performed in available time.

E. CATERING
1 catering truck for servicing galleys sequentially at doors 1R and 4R.
Equipment positioning + opening door = +2 min.
Closing door + equipment removal = +1.5 min.
Time to drive from one door to the other = +2 min.

Full Size Trolley Equivalent (FSTE) to unload and load: 14 FSTE
- 4 FSTE at door 1R
- 10 FSTE at door 4R.

Time for trolley exchange = 1.2 min per FSTE.

F. GROUND HANDLING/GENERAL SERVICING
Start of operations:
- Bridges/stairs: t0 = 0
- Other equipment: t = t0 + 1 min.

Ground Power Unit (GPU): up to 90 kVA.
Air conditioning: one hose.
Potable water servicing: 100% uplift, 200 l (53 US gal).
Toilet servicing: draining + rinsing.

****ON A/C A321neo-XLR**

3. Assumptions used for full servicing turn round time chart for 206 seats with Cargo Loading System (CLS)

FIGURE 5-2-0-991-011-A

A. PASSENGER HANDLING
206 pax (all Y/C).
All passengers deplane and board the aircraft.

1 PBB used at door 1L.
No PRM on board.

Deplaning:
- 206 pax at door 1L
- Deplaning rate = 20 pax/min
- Stairs deplaning rate = 18 pax/min.

Boarding:
- 206 pax at door 1L
- Boarding rate = 12 pax/min
- Stairs boarding rate = 12 pax/min
- LPS allowance + headcounting = +2 min.

B. CARGO

2 cargo loaders + 1 belt loader.
100% cargo exchange (baggage only):
- FWD cargo compartment: 5 containers
- AFT cargo compartment: 3 containers
- Bulk cargo compartment: 500 kg (1 102 lb).

Container unloading/loading times:
- Unloading = 1.5 min/container
- Loading = 1.5 min/container.

C. REFUELING

32 450 l (8 572 US gal) at 50 psig (3.45 bars-rel).
No optional coupling.
Refuelling with passengers on board: Yes

D. CLEANING

Cleaning is performed in available time.

E. CATERING

2 catering truck for servicing galleys sequentially at doors 1R and 4R.

FSTE to unload and load: 14 FSTE
- 7 FSTE at door 1R
- 7 FSTE at door 4R.

Time for trolley exchange = 1.2 min per FSTE.
Additional time for crossing = 0.5 min.
Maximum catering time = +16.8 min.

F. GROUND HANDLING/GENERAL SERVICING
Potable water servicing: 100% uplift.
Waste water servicing: draining + rinsing.

G. SECURITY/SAFETY CHECKS
No security or safety checks are applicable.

4. Assumptions used for full servicing turn round time chart for 206 seats with bulk loading system

FIGURE 5-2-0-991-013-A

A. PASSENGER HANDLING
206 pax (all Y/C).
All passengers deplane and board the aircraft.
1 PBB used at door 1L.
No PRM on board.

Deplaning:
- 206 pax at door 1L
- Deplaning rate = 20 pax/min
- Stairs deplaning rate = 18 pax/min.

Boarding:
- 206 pax at door 1L
- Boarding rate = 12 pax/min
- Stairs boarding rate = 12 pax/min
- LPS allowance + headcounting = +2 min.

B. CARGO
2 belt loaders.
100% cargo exchange (baggage only):
- FWD cargo compartment: 93 items
- AFT cargo compartment: 113 items
- Bulk cargo compartment: 500 kg (1 102 lb).

Item unloading/loading times:
- Unloading = 15 item/min
- Loading = 10 item/min.

C. REFUELING
32 450 l (8 572 US gal) at 50 psig (3.45 bars-rel).
No optional coupling.

Refuelling with passengers on board: Yes

D. CLEANING
Cleaning is performed in available time.

E. CATERING
2 catering truck for servicing galleys sequentially at doors 1R and 4R.

FSTE to unload and load: 14 FSTE
- 7 FSTE at door 1R
- 7 FSTE at door 4R.

Time for trolley exchange = 1.2 min per FSTE.
Additional time for crossing = 0.5 min.
Maximum catering time = +16.8 min.

F. GROUND HANDLING/GENERAL SERVICING
Potable water servicing: 100% uplift.
Waste water servicing: draining + rinsing.

G. SECURITY/SAFETY CHECKS
No security or safety checks are applicable.

5. Assumptions used for full servicing turn round time chart for 244 seats with Cargo Loading System (CLS)

FIGURE 5-2-0-991-012-A

A. PASSENGER HANDLING
244 pax (all Y/C).
All passengers deplane and board the aircraft.
1 PBB used at door 1L.
No PRM on board.

Deplaning:
- 244 pax at door 1L
- Deplaning rate = 20 pax/min
- Stairs deplaning rate = 18 pax/min.

Boarding:
- 244 pax at door 1L
- Boarding rate = 12 pax/min
- Stairs boarding rate = 12 pax/min
- LPS allowance + headcounting = +2 min.

B. CARGO

2 cargo loaders.
100% cargo exchange (baggage only):
- FWD cargo compartment: 5 containers
- AFT cargo compartment: 3 containers
- Bulk cargo compartment: 500 kg (1 102 lb).

Container unloading/loading times:
- Unloading = 1.5 min/container
- Loading = 1.5 min/container.

C. REFUELING

32 450 l (8 572 US gal) at 50 psig (3.45 bars-rel).
No optional coupling.
Refuelling with passengers on board: Yes

D. CLEANING

Cleaning is performed in available time.

E. CATERING

2 catering truck for servicing galleys sequentially at doors 1R and 4R.

FSTE to unload and load: 7 FSTE
- 3 FSTE at door 1R
- 4 FSTE at door 4R.

Time for trolley exchange = 1.2 min per FSTE.
Additional time for crossing = 0.5 min.
Maximum catering time = +8.4 min.

F. GROUND HANDLING/GENERAL SERVICING

Potable water servicing: 100% uplift.
Waste water servicing: draining + rinsing.

G. SECURITY/SAFETY CHECKS

No security or safety checks are applicable.

6. Assumptions used for full servicing turn round time chart for 244 seats with bulk loading system

FIGURE 5-2-0-991-014-A

A. PASSENGER HANDLING

244 pax (all Y/C).
All passengers deplane and board the aircraft.
1 PBB used at door 1L.

No PRM on board.

Deplaning:
- 244 pax at door 1L
- Deplaning rate = 20 pax/min
- Stairs deplaning rate = 18 pax/min.

Boarding:
- 244 pax at door 1L
- Boarding rate = 12 pax/min
- Stairs boarding rate = 12 pax/min
- LPS allowance + headcounting = +2 min.

B. CARGO

2 belt loaders.
100% cargo exchange (baggage only):
- FWD cargo compartment: 110 items
- AFT cargo compartment: 134 items
- Bulk cargo compartment: 500 kg (1 102 lb).

Item unloading/loading times:
- Unloading = 15 item/min
- Loading = 10 item/min.

C. REFUELING

32 450 l (8 572 US gal) at 50 psig (3.45 bars-rel).
No optional coupling.
Refuelling with passengers on board: Yes

D. CLEANING

Cleaning is performed in available time.

E. CATERING

2 catering truck for servicing galleys sequentially at doors 1R and 4R.

FSTE to unload and load: 7 FSTE
- 3 FSTE at door 1R
- 4 FSTE at door 4R.

Time for trolley exchange = 1.2 min per FSTE.
Additional time for crossing = 0.5 min.
Maximum catering time = +8.4 min.

F. GROUND HANDLING/GENERAL SERVICING

Potable water servicing: 100% uplift.

Waste water servicing: draining + rinsing.

G. SECURITY/SAFETY CHECKS

No security or safety checks are applicable.

****ON A/C A321-100 A321-200 A321neo**

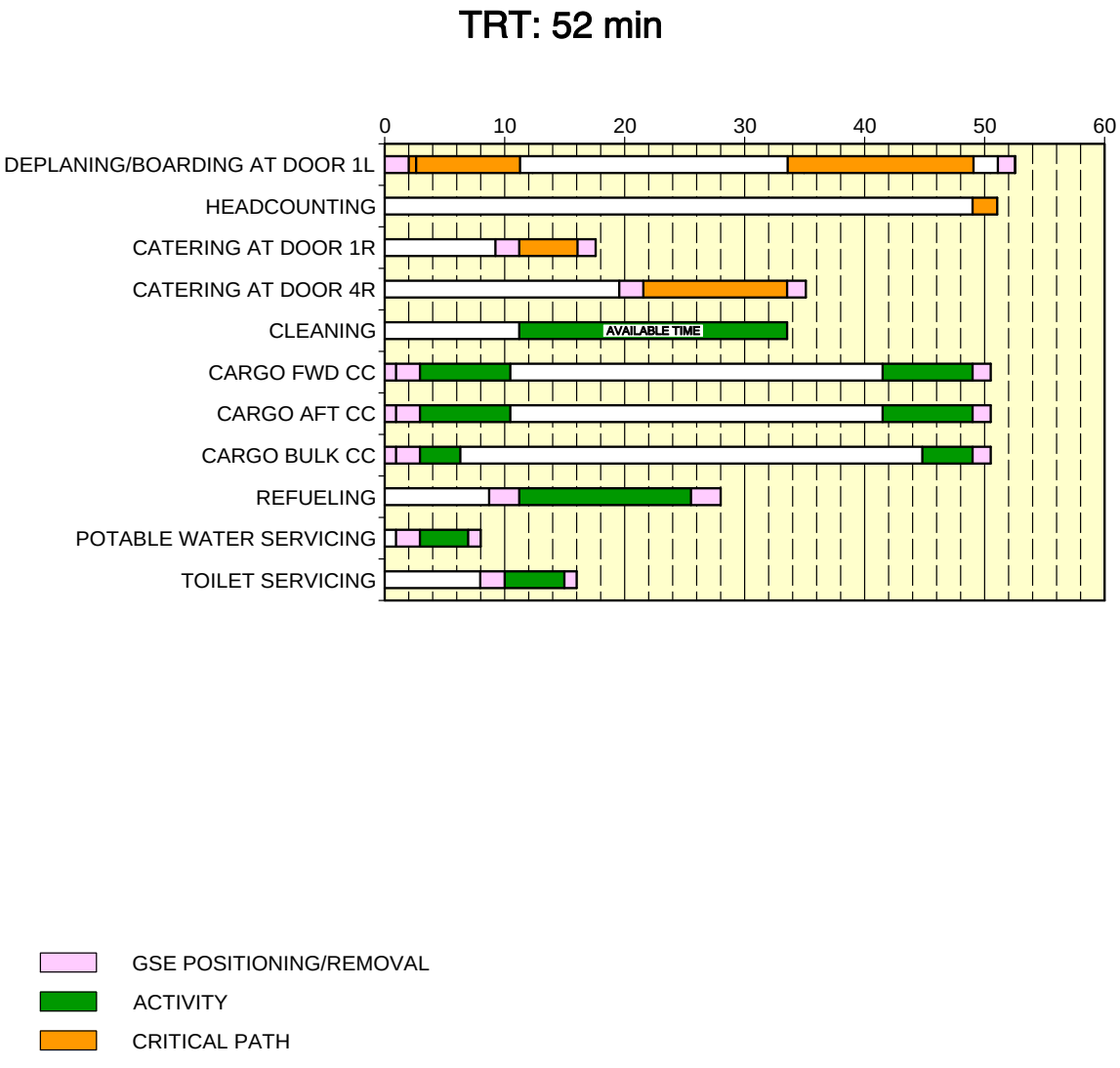

Full Servicing Turn Round Time Chart
FIGURE-5-2-0-991-007-A01

****ON A/C A321neo-XLR**

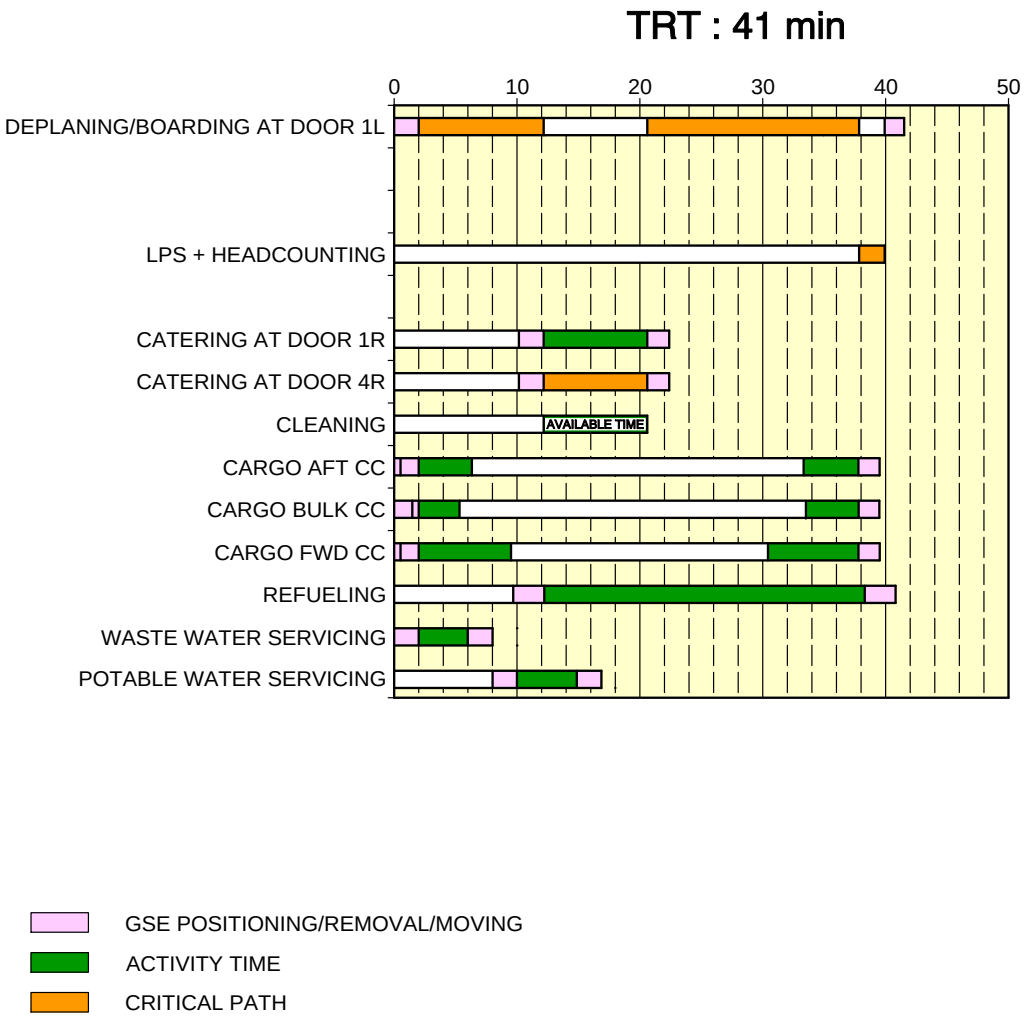

N_AC_050200_1_0110101_01_00

Full Servicing Turn Round Time Chart with 206 Seats
Full Servicing Turn Round Time Chart for CLS
FIGURE-5-2-0-991-011-A01

****ON A/C A321neo-XLR**

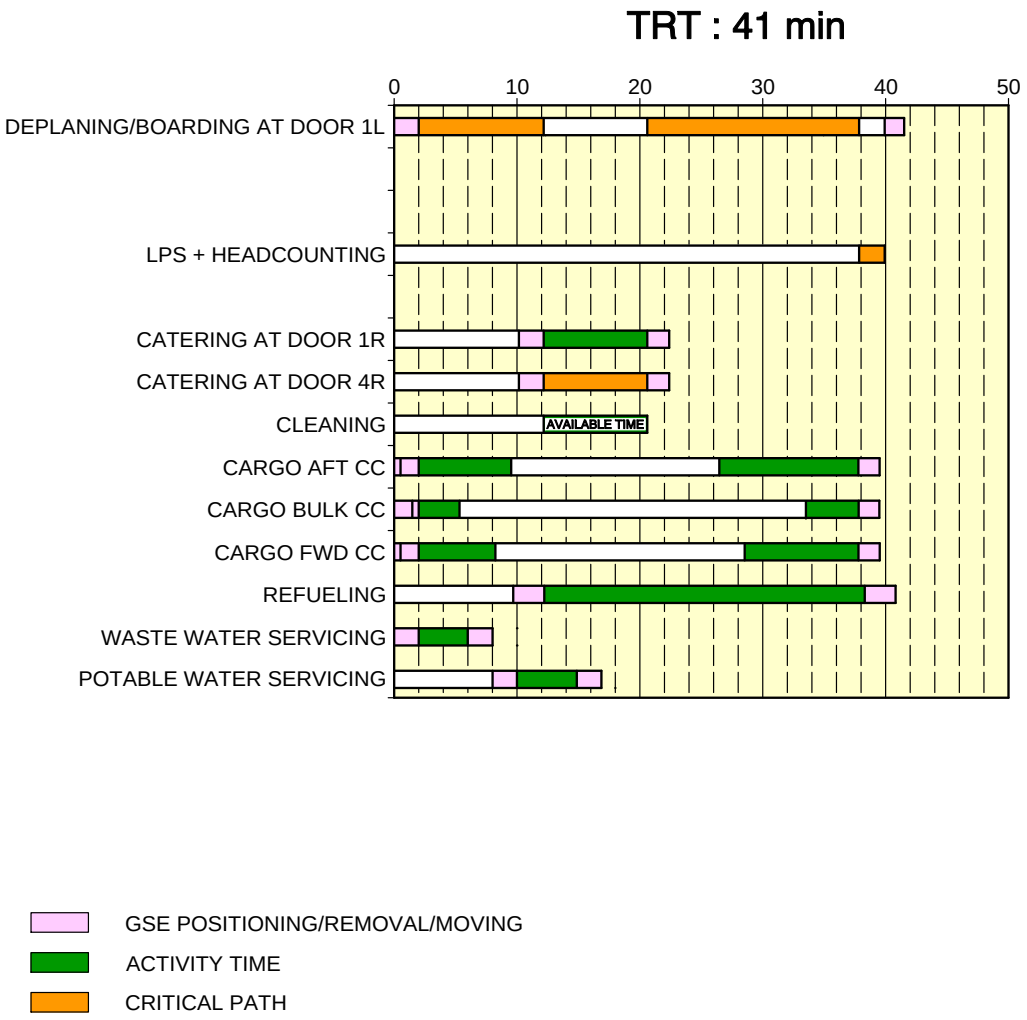

N_AC_050200_1_0130101_01_00

Full Servicing Turn Round Time Chart with 206 Seats
Full Servicing Turn Round Time Chart for Bulk Loading System
FIGURE-5-2-0-991-013-A01

****ON A/C A321neo-XLR**

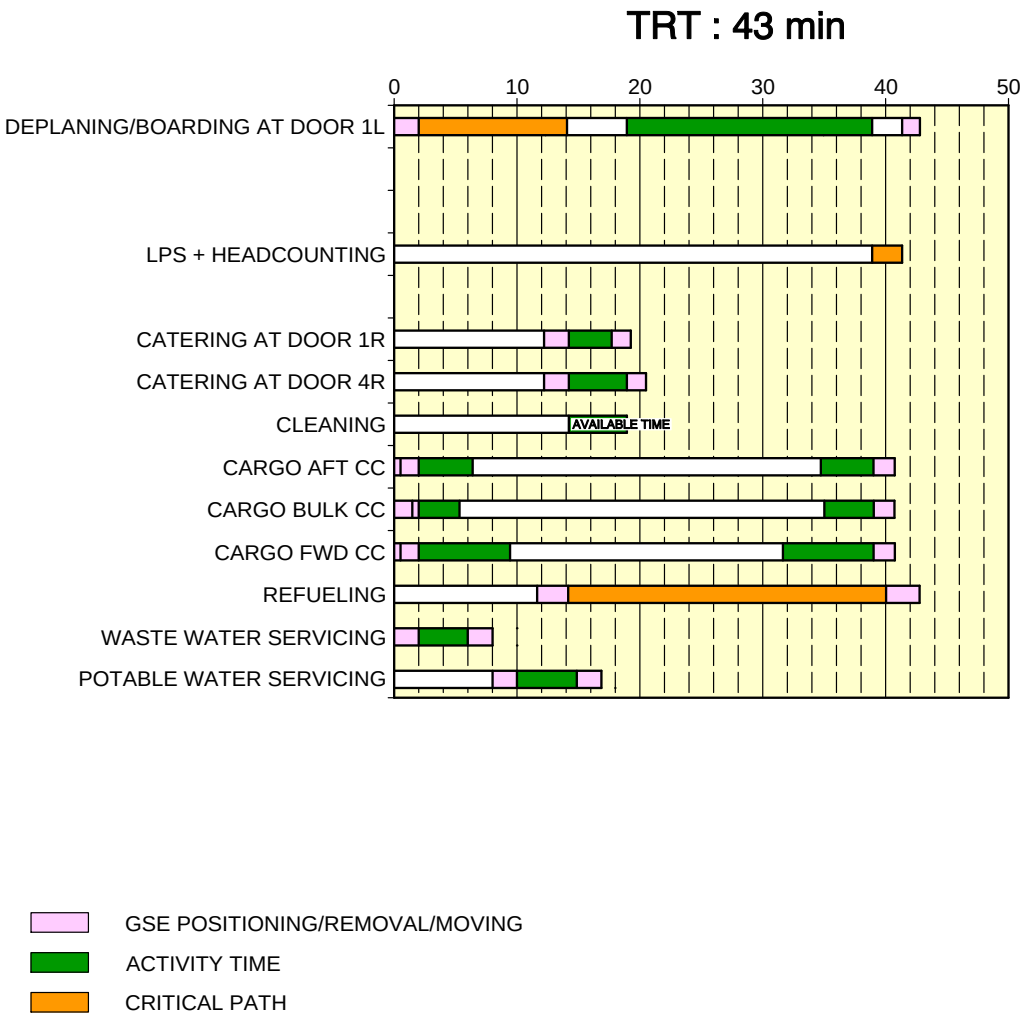

N_AC_050200_1_0120101_01_00

Full Servicing Turn Round Time Chart with 244 Seats
Full Servicing Turn Round Time Chart for CLS
FIGURE-5-2-0-991-012-A01

****ON A/C A321neo-XLR**

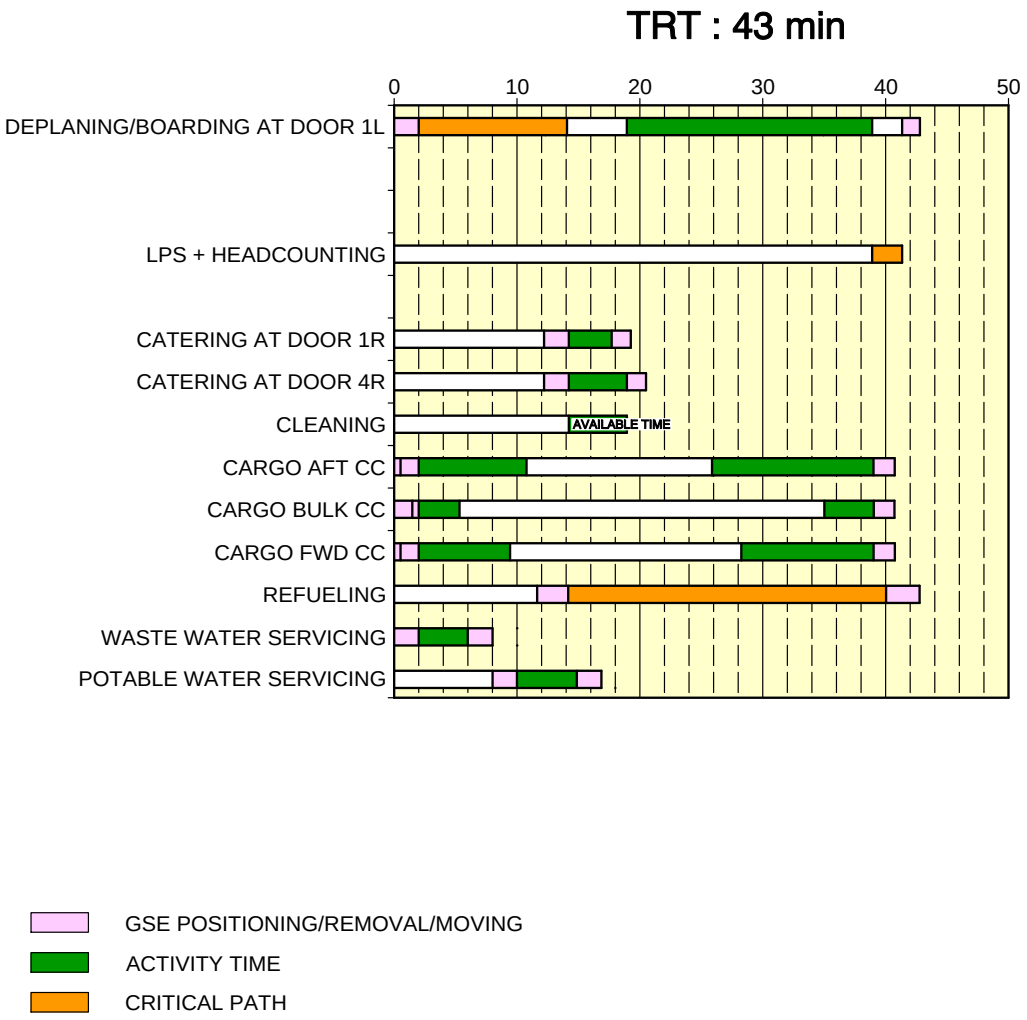

N_AC_050200_1_0140101_01_00

Full Servicing Turn Round Time Chart with 244 Seats
Full Servicing Turn Round Time Chart for Bulk Loading System
FIGURE-5-2-0-991-014-A01

5-3-0 Terminal Operation - Outstation Turn Round Time Chart

****ON A/C A321-100 A321-200 A321neo**

Terminal Operations -Transit Turn Round Time

1. This section provides a typical turn round time chart showing the typical time for ramp activities during aircraft turn round. Actual times may vary due to each operator's specific practices, resources, equipment and operating conditions.

2. Assumptions used for transit turn round time chart

   FIGURE 5-3-0-991-004-A

   A. PASSENGER HANDLING
   220 pax (all Y/C).
   All passengers deplane and board the aircraft.
   2 stairways used at doors 1L and 4L.
   Equipment positioning + opening door = +2 min.
   Closing door + equipment removal = +1.5 min.
   No Passenger with Reduced Mobility (PRM) on board.

   Deplaning:
   - 110 pax at door 1L
   - 110 pax at door 4L
   - Deplaning rate = 20 pax/min. per door

   Boarding:
   - 110 pax at door 1L
   - 110 pax at door 4L
   - Boarding rate = 12 pax/min. per door
   - Last Pax Seating allowance (LPS) + headcounting = +2 min.

   B. CARGO
   2 cargo loaders.
   Opening door + equipment positioning = +2 min.
   Equipment removal + closing door = +1.5 min.

   100% cargo exchange :
   - FWD cargo compartment: 5 containers
   - AFT cargo compartment: 5 containers

Container unloading/loading times:
- Unloading = 1.5 min./container
- Loading = 1.5 min./container.

C. REFUELING
No refueling.

D. CLEANING
Cleaning is performed in available time.

E. CATERING
One catering truck for servicing the galleys as required.

F. GROUND HANDLING/GENERAL SERVICING
Start of operations:
- Bridges/stairs: t0 = 0
- Other equipment: t = t0.

Ground Power Unit (GPU): up to 90 kVA.
Air conditioning: one hose.
No potable water servicing.
No toilet servicing.

****ON A/C A321-100 A321-200 A321neo**

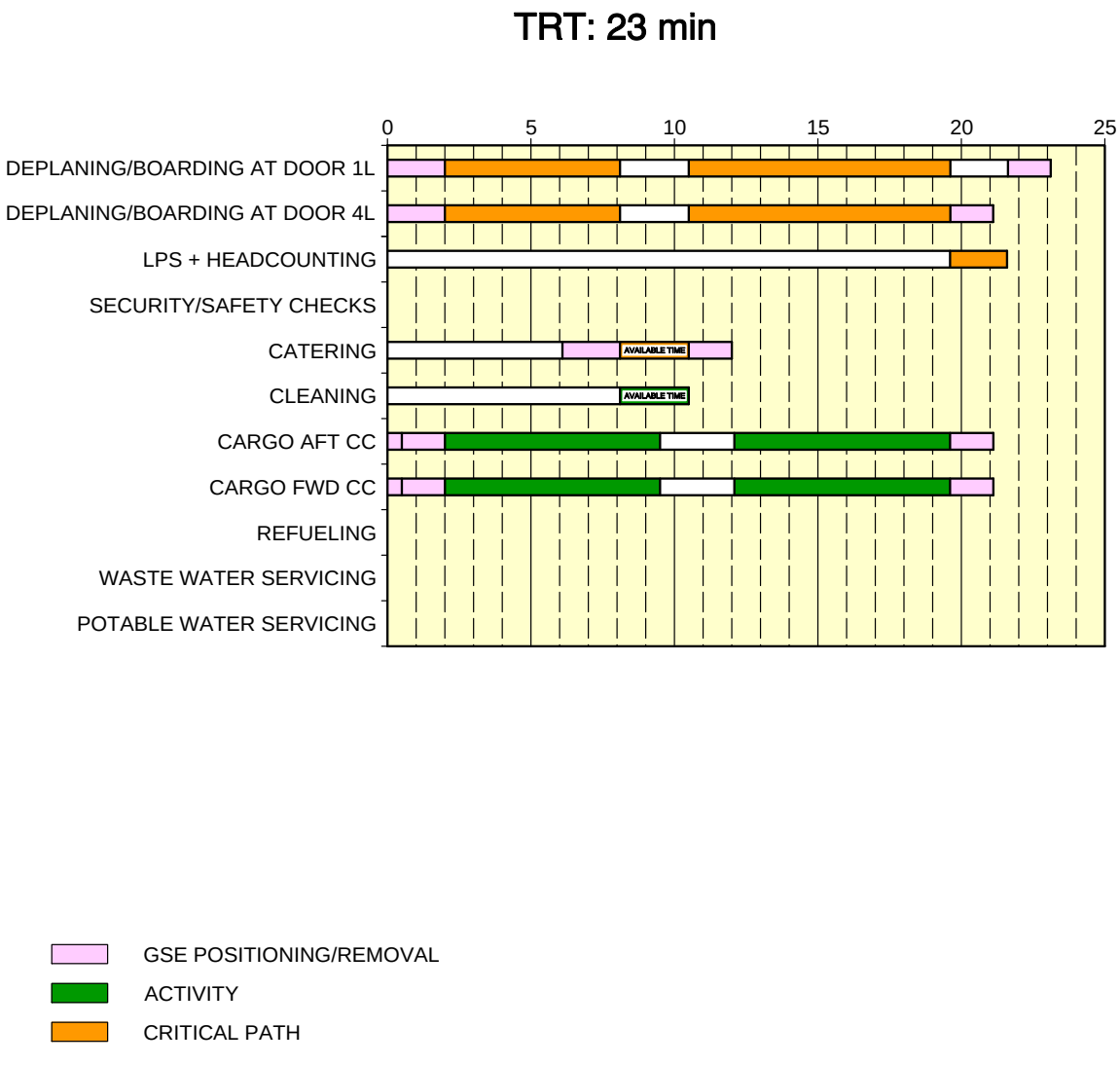

N_AC_050300_1_0040101_01_05

Outstation Turn Round Time Chart
FIGURE-5-3-0-991-004-A01

5-4-1 Ground Service Connections

****ON A/C A321-100 A321-200 A321neo A321neo-XLR**

Ground Service Connections Layout

1. This section provides the ground service connections layout.

**ON A/C A321-100 A321-200 A321neo A321neo-XLR

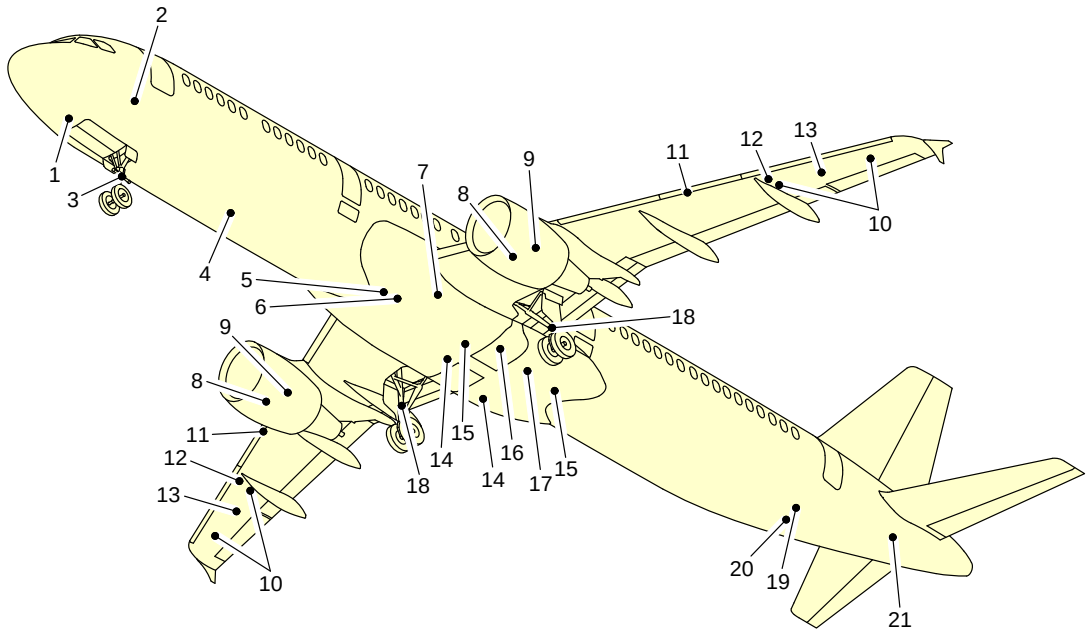

1 - GROUND ELECTRICAL POWER CONNECTOR
2 - OXYGEN SYSTEM
3 - NLG GROUNDING (EARTHING) POINT
4 - POTABLE WATER DRAIN PANEL
5 - LOW PRESSURE AIR PRE-CONDITIONING
6 - HIGH PRESSURE AIR PRE-CONDITIONING
7 - REFUEL/DEFUEL INTEGRATED PANEL
8 - IDG/STARTER OIL SERVICING
9 - ENGINE OIL SERVICING
10 - OVERPRESSURE PROTECTOR
11 - REFUEL/DEFUEL COUPLINGS (OPTIONAL-LH WING)
12 - OVERWING REFUEL (IF INSTALLED)
13 - NACA VENT INTAKE
14 - YELLOW HYDRAULIC-SYSTEM SERVICE PANEL
15 - BLUE HYDRAULIC-SYSTEM SERVICE PANEL
16 - ACCUMULATOR CHARGING (GREEN SYSTEM) AND RESERVOIR DRAIN (GREEN SYSTEM)
17 - GREEN HYDRAULIC-SYSTEM SERVICE PANEL
18 - MLG GROUNDING (EARTHING) POINT
19 - WASTE WATER SERVICE PANEL
20 - POTABLE WATER SERVICE PANEL
21 - APU OIL SERVICING

N_AC_050401_1_0070101_01_02

Ground Service Connections Layout
FIGURE-5-4-1-991-007-A01

5-4-2 Grounding Points

****ON A/C A321-100 A321-200 A321neo A321neo-XLR**

Grounding (Earthing) Points

1. Grounding (Earthing) Points

	DISTANCE			
	AFT OF NOSE	FROM AIRCRAFT CENTERLINE		MEAN HEIGHT FROM GROUND
		LH SIDE	RH SIDE	
On NLG leg:	5.07 m (16.63 ft)	On Centerline		0.94 m (3.08 ft)
On left MLG leg:	21.97 m (72.08 ft)	3.79 m (12.43 ft)	-	1.07 m (3.51 ft)
On right MLG leg:	21.97 m (72.08 ft)	-	3.79 m (12.43 ft)	1.07 m (3.51 ft)

A. The grounding (earthing) stud on each landing gear leg is designed for use with a clip-on connector (such as Appleton TGR).

B. The grounding (earthing) studs are used to connect the aircraft to an approved ground (earth) connection on the ramp or in the hangar for:
   - Refuel/defuel operations,
   - Maintenance operations,
   - Bad weather conditions.

NOTE : In all other conditions, the electrostatic discharge through the tire is sufficient. If the aircraft is on jacks for retraction and extension checks or for the removal/ installation of the landing gear, the grounding (earthing) alternative points (if installed) are:
   - In the hole on the avionics-compartment lateral right door-frame (on FR14),
   - On the engine nacelles,
   - On the wing upper surfaces.

**ON A/C A321-100 A321-200 A321neo A321neo-XLR

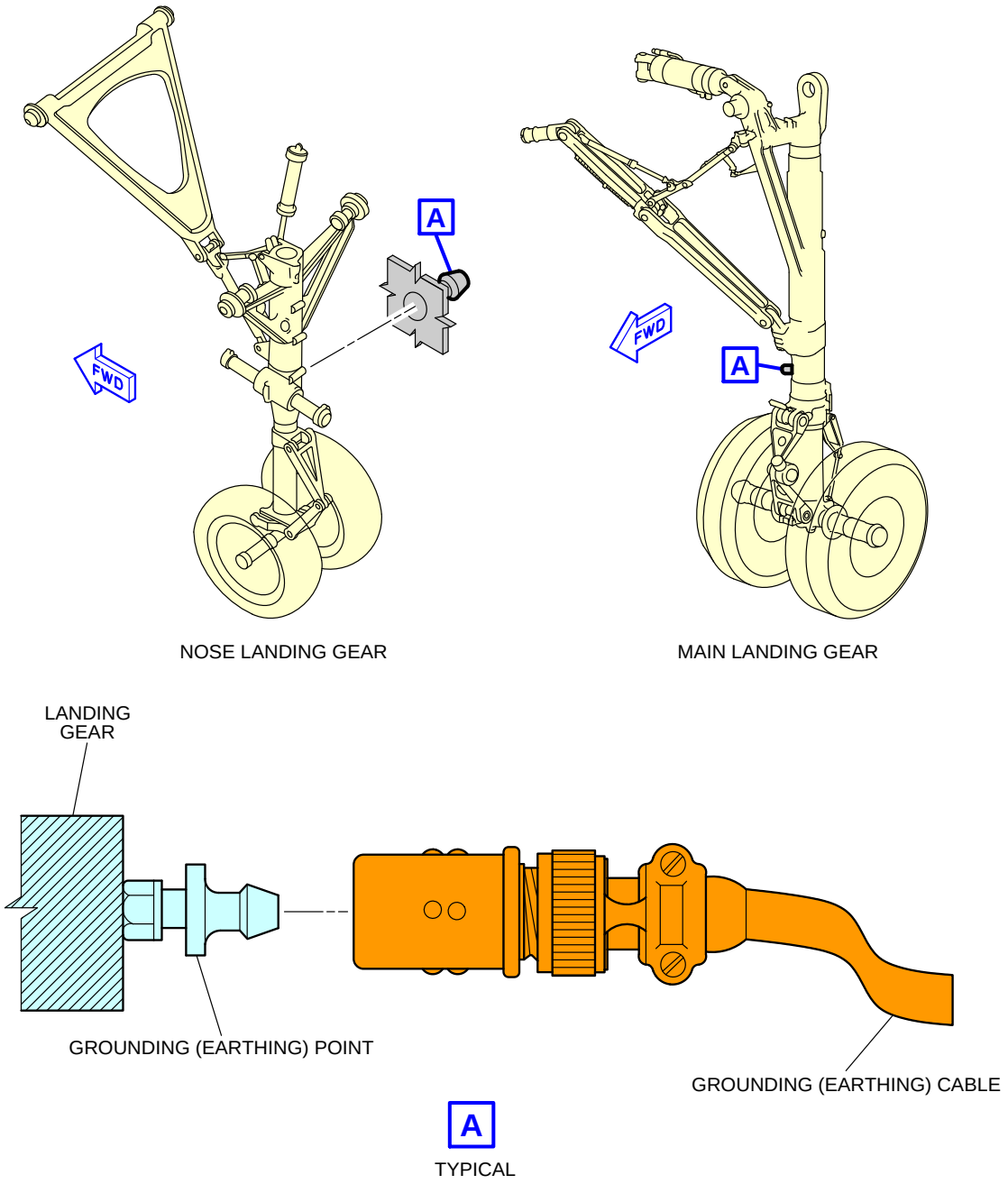

N_AC_050402_1_0070101_01_01

Ground Service Connections
Grounding (Earthing) Points - Landing Gear
FIGURE-5-4-2-991-007-A01

**ON A/C A321-100 A321-200 A321neo A321neo-XLR

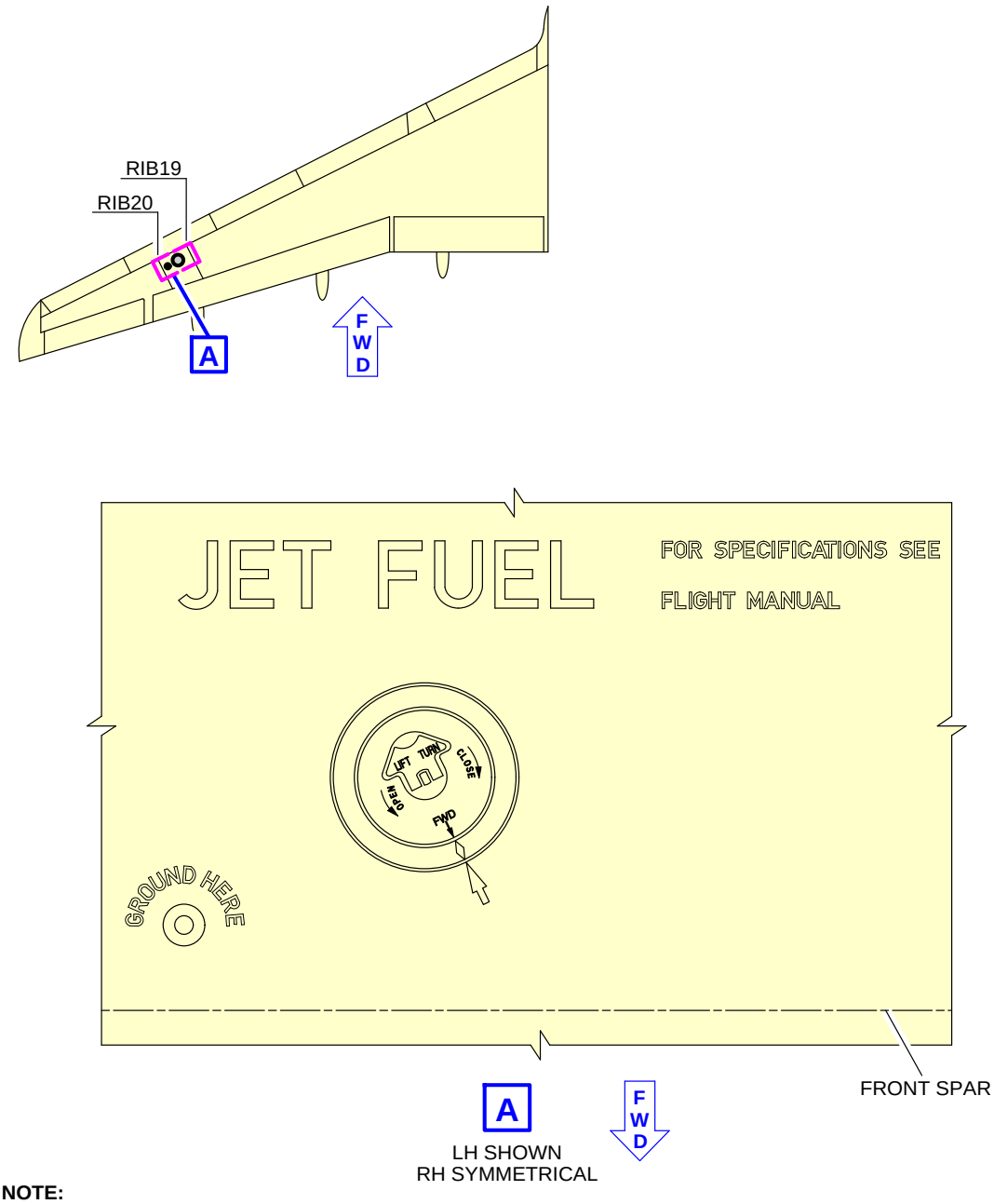

NOTE:

THE REFUEL POINT ON THE WING UPPER SURFACE IS NOT AVAILABLE FOR SOME AIRCRAFTS.
THE LABEL "GROUND HERE" IS NOT AVAILABLE ON SOME AIRCRAFTS.
BUT THE GROUNDING (EARTHING) POINT CAN BE USED FOR THE GROUNDING (EARTHING) OF THE AIRCRAFT.

N_AC_050402_1_0080101_01_02

Ground Service Connections
Grounding (Earthing) Points - Wing
FIGURE-5-4-2-991-008-A01

**ON A/C A321-100 A321-200 A321neo A321neo-XLR

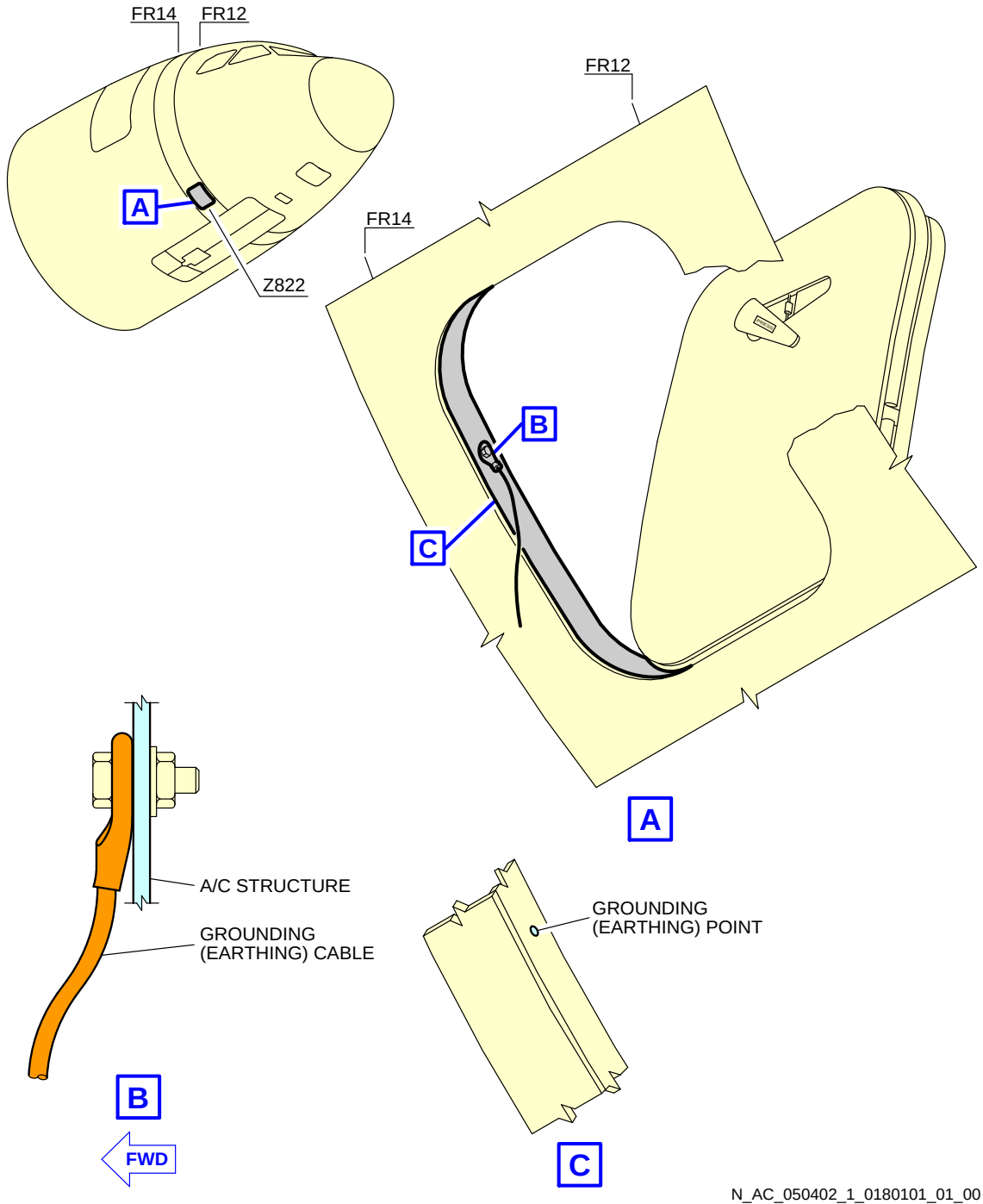

Ground Service Connections
Grounding (Earthing) Point - Avionics Compartment Door-Frame
FIGURE-5-4-2-991-018-A01

**ON A/C A321-100 A321-200 A321neo A321neo-XLR

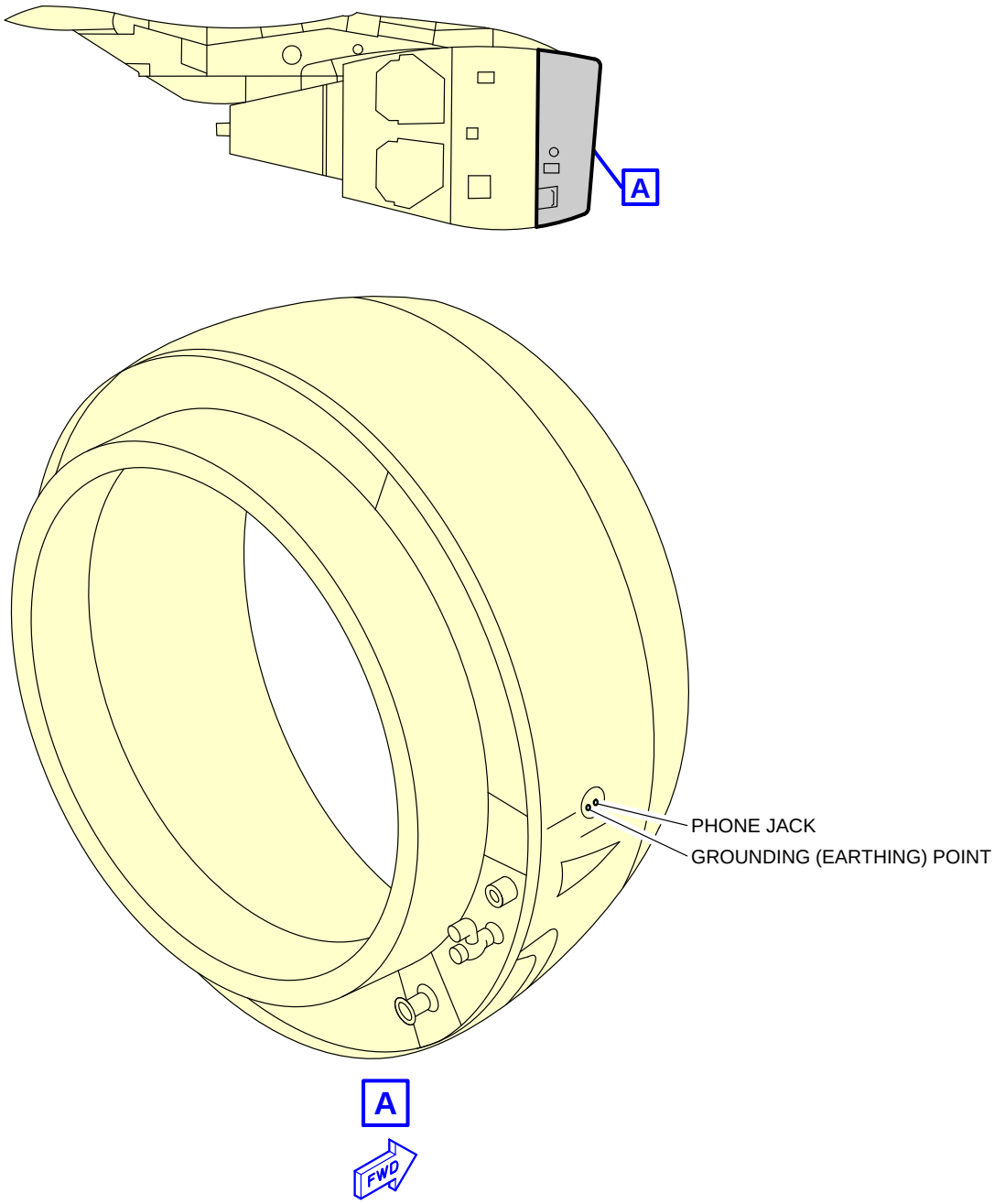

Ground Service Connections
Grounding (Earthing) Point - Engine Air Intake (If Installed)
FIGURE-5-4-2-991-019-A01

5-4-3 Hydraulic System

****ON A/C A321-100 A321-200 A321neo A321neo-XLR**

Hydraulic Servicing

1. Access

ACCESS	DISTANCE			
	AFT OF NOSE	FROM AIRCRAFT CENTERLINE		MEAN HEIGHT FROM GROUND
		LH SIDE	RH SIDE	
Green System: Access Door 197CB	23.44 m (76.90 ft)	1.27 m (4.17 ft)		1.76 m (5.77 ft)
Yellow System: Access Door 198CB	23.44 m (76.90 ft)		1.27 m (4.17 ft)	1.76 m (5.77 ft)
Blue System: Access Door 197EB	24.49 m (80.35 ft)	1.27 m (4.17 ft)		1.76 m (5.77 ft)

2. Reservoir Pressurization

ACCESS	DISTANCE			
	AFT OF NOSE	FROM AIRCRAFT CENTERLINE		MEAN HEIGHT FROM GROUND
		LH SIDE	RH SIDE	
Access Door 195BB	19.92 m (65.35 ft)	0.25 m (0.82 ft)		1.74 m (5.71 ft)

3. Accumulator Charging

Four MIL-PRF-6164 connections:

ACCESS	DISTANCE			
	AFT OF NOSE	FROM AIRCRAFT CENTERLINE		MEAN HEIGHT FROM GROUND
		LH SIDE	RH SIDE	
Yellow System Accumulator: Access Door 196BB	19.92 m (65.35 ft)		0.25 m (0.82 ft)	1.74 m (5.71 ft)
Green System Accumulator: Left MLG Door	21.04 m (69.03 ft)	0.25 m (0.82 ft)		3.20 m (10.50 ft)
Blue System Accumulator: Access Door 195BB	19.92 m (65.35 ft)	0.25 m (0.82 ft)		1.74 m (5.71 ft)
Yellow System Braking Accumulator: Access Door 196BB	19.92 m (65.35 ft)		0.25 m (0.82 ft)	1.74 m (5.71 ft)

4. Reservoir Filling

Centralized filling capability on the Green System ground service panel:

ACCESS	DISTANCE			
	AFT OF NOSE	FROM AIRCRAFT CENTERLINE		MEAN HEIGHT FROM GROUND
		LH SIDE	RH SIDE	
Access Door 197CB	23.44 m (76.90 ft)	1.27 m (4.17 ft)		1.76 m (5.77 ft)

Filling: Ground pressurized supply or hand pump.

5. Reservoir Drain

Three 3/8 in. self-sealing connections:

ACCESS	DISTANCE			
	AFT OF NOSE	FROM AIRCRAFT CENTERLINE		MEAN HEIGHT FROM GROUND
		LH SIDE	RH SIDE	
Yellow System:	19.92 m		0.25 m	1.74 m

ACCESS	DISTANCE			
	AFT OF NOSE	FROM AIRCRAFT CENTERLINE		MEAN HEIGHT FROM GROUND
		LH SIDE	RH SIDE	
Access Door 196BB	(65.35 ft)		(0.82 ft)	(5.71 ft)
Green System: Left MLG Door	21.04 m (69.03 ft)	0.25 m (0.82 ft)		3.20 m (10.5 ft)
Blue System: Access Door 197EB	24.49 m (80.35 ft)	1.27 m (4.17 ft)		1.76 m (5.77 ft)

NOTE : The drain valve is on the Blue System ground service panel for the reservoir of the Blue hydraulic system.
The drain valve is on the reservoir for the Green and Yellow Hydraulic Systems.

6. Ground Test

On each ground service panel:
- One self-sealing connector (suction).
- One self-sealing connector (delivery).

**ON A/C A321-100 A321-200 A321neo A321neo-XLR

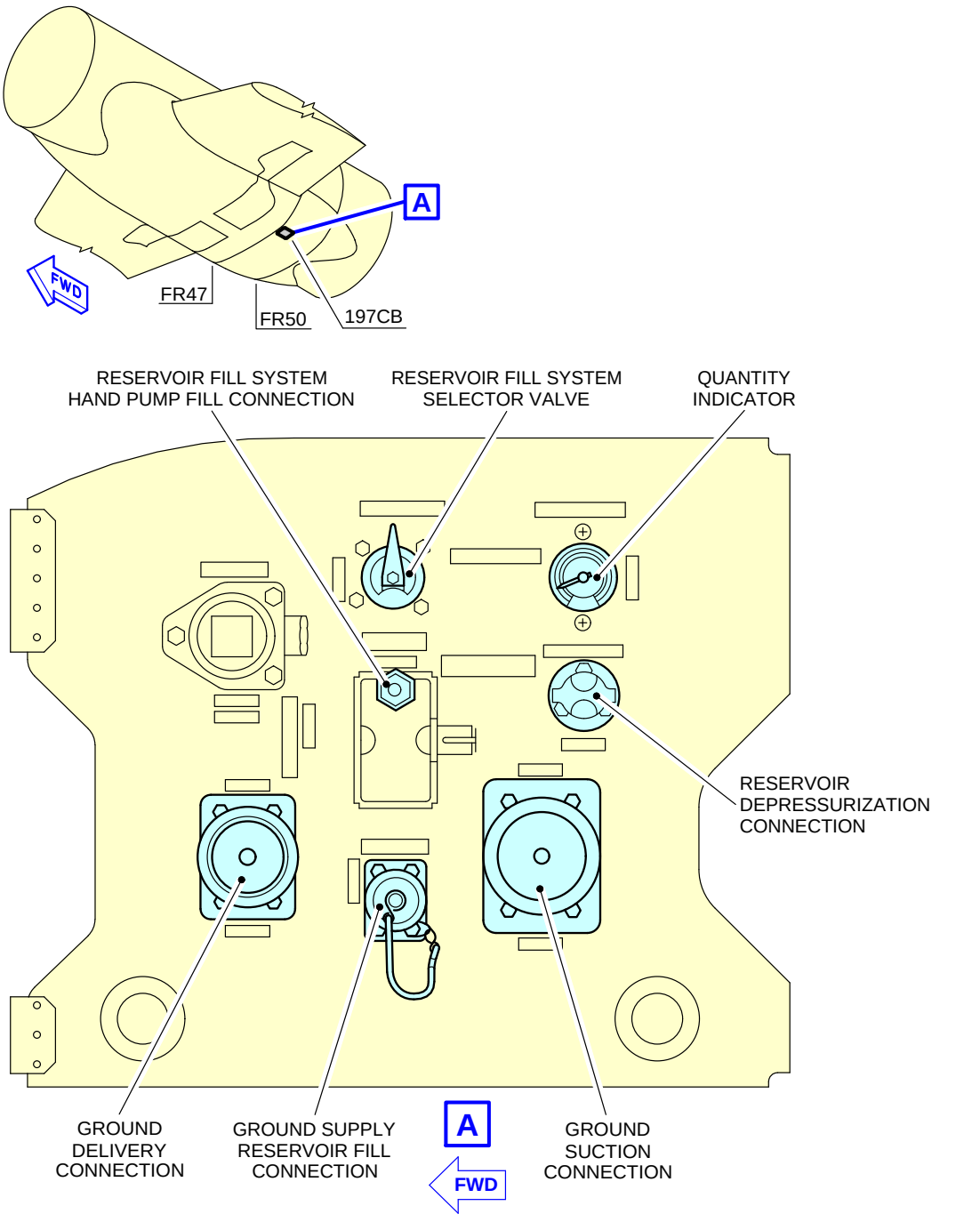

Ground Service Connections
Green System Ground Service Panel
FIGURE-5-4-3-991-004-A01

**ON A/C A321-100 A321-200 A321neo A321neo-XLR

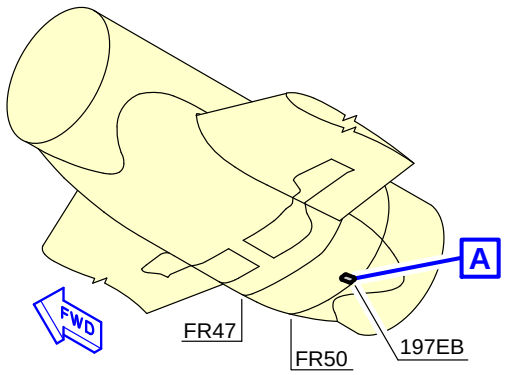

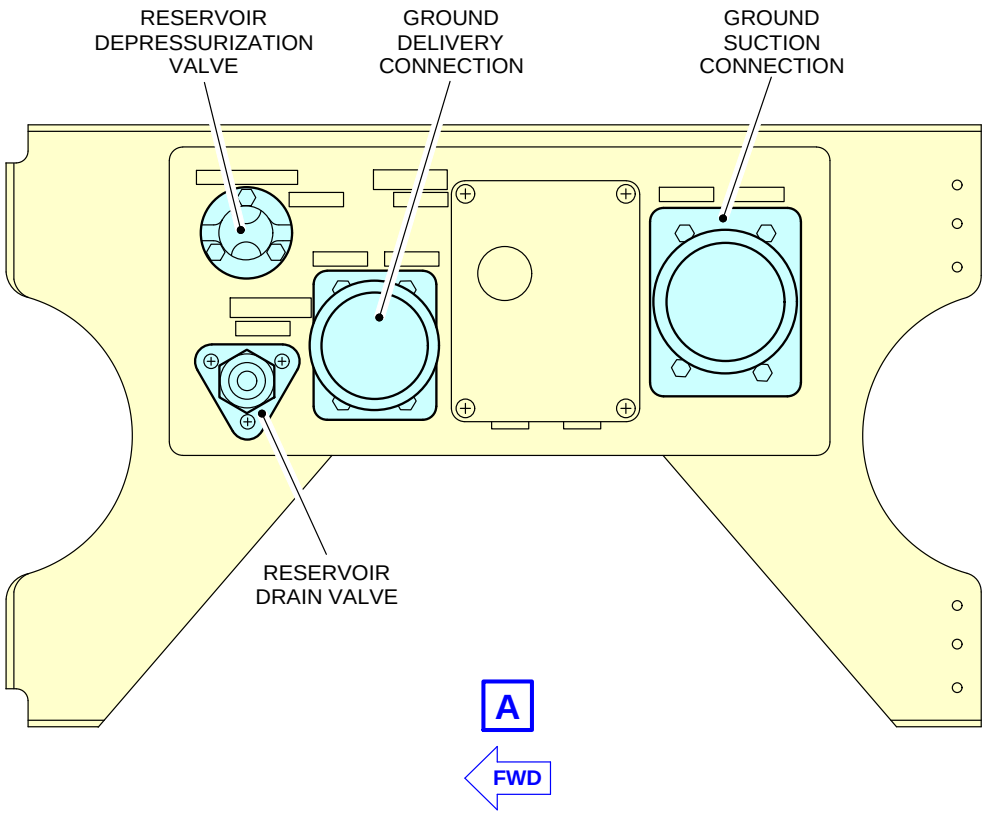

N_AC_050403_1_0050101_01_01

Ground Service Connections
Blue System Ground Service Panel
FIGURE-5-4-3-991-005-A01

**ON A/C A321-100 A321-200 A321neo A321neo-XLR

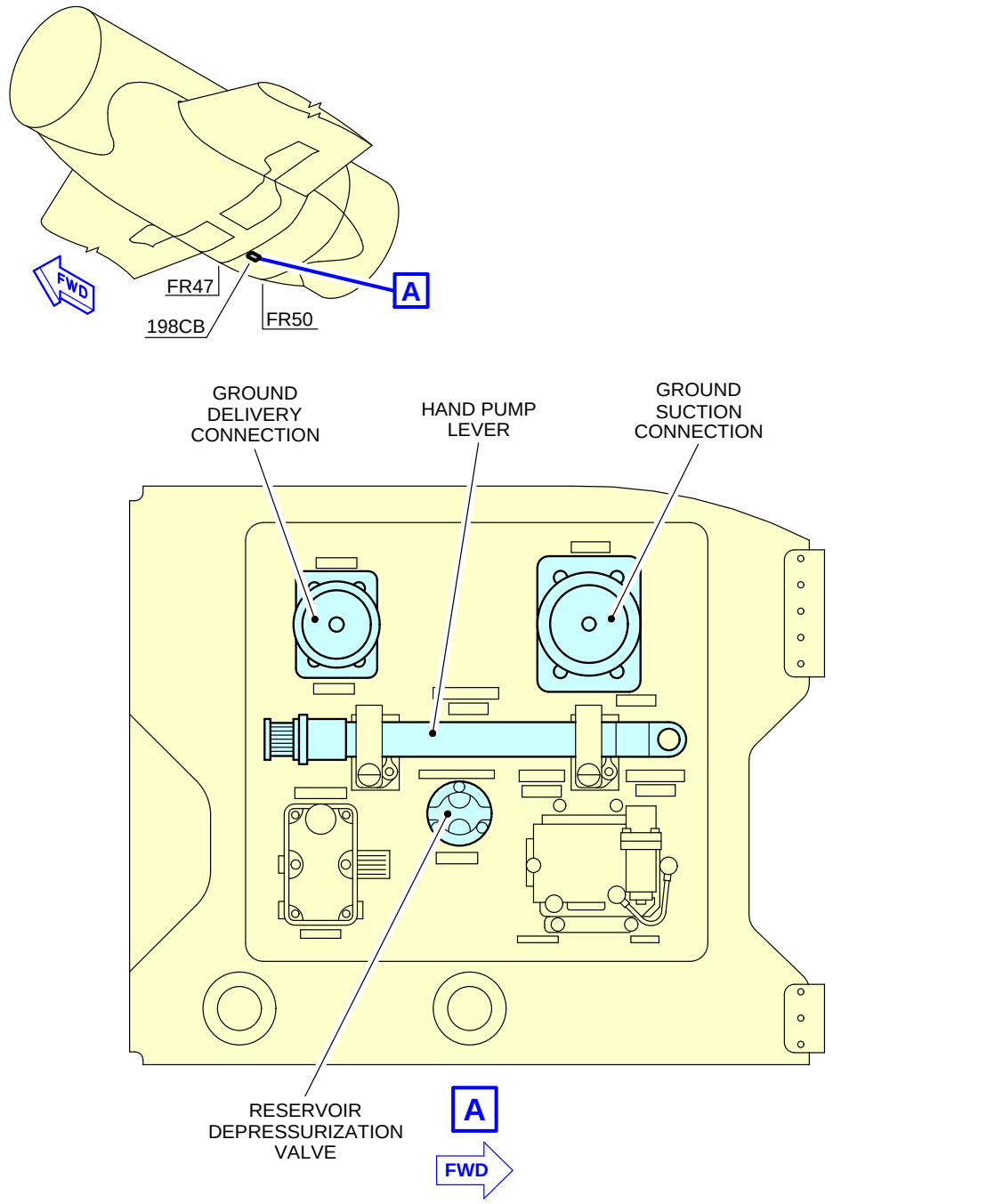

N_AC_050403_1_0060101_01_01

Ground Service Connections
Yellow System Ground Service Panel
FIGURE-5-4-3-991-006-A01

**ON A/C A321-100 A321-200 A321neo A321neo-XLR

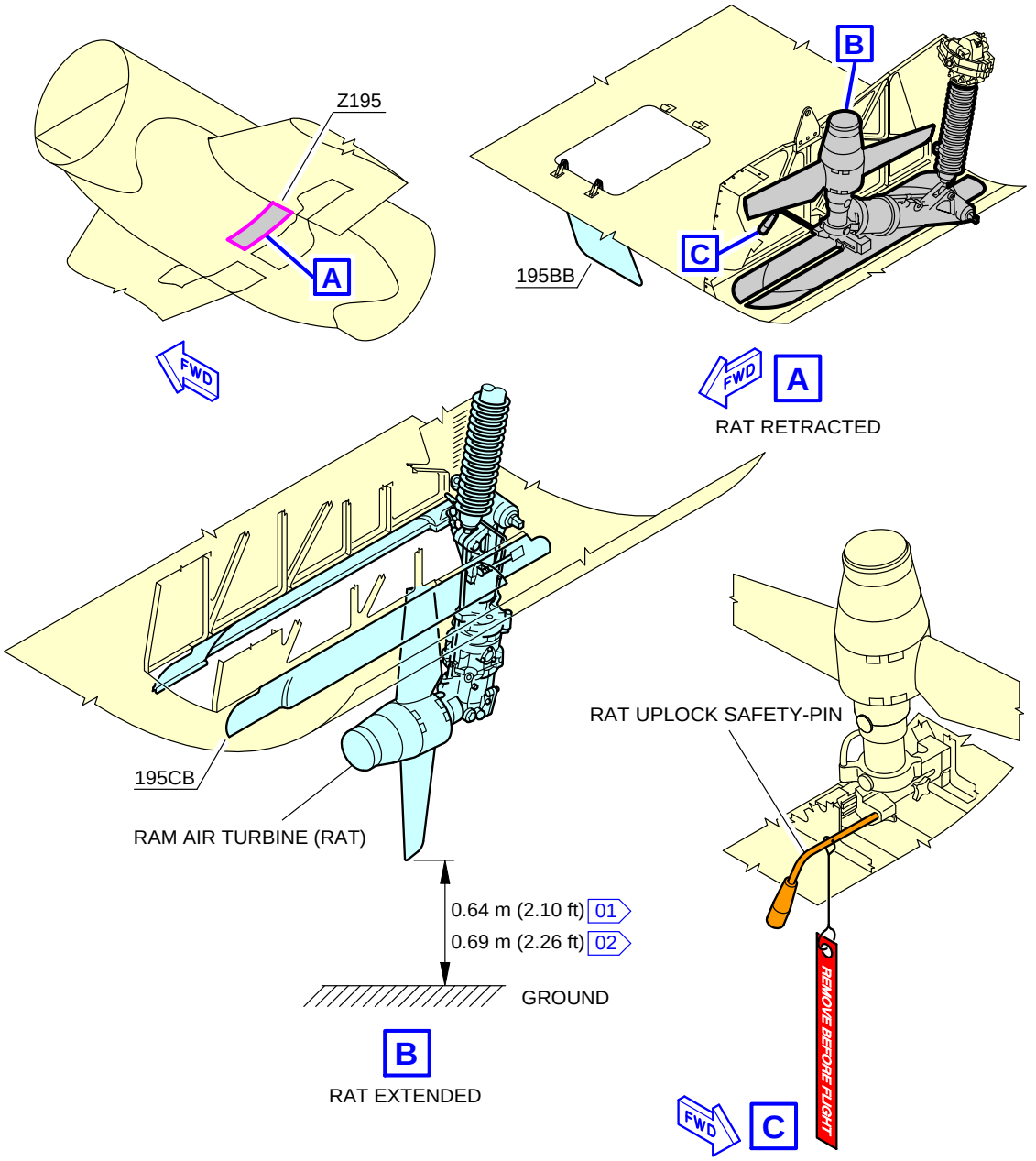

NOTE:

01 FOR A318, A319 AND A320

02 FOR A321

N_AC_050403_1_0070101_01_00

Ground Service Connections
RAT
FIGURE-5-4-3-991-007-A01

5-4-4 Electrical System

****ON A/C A321-100 A321-200 A321neo A321neo-XLR**

Electrical System

1. Electrical System

   This chapter provides data related to the location of the ground service connections.

ACCESS	DISTANCE			
	AFT OF NOSE	FROM AIRCRAFT CENTERLINE		MEAN HEIGHT FROM GROUND
		LH SIDE	RH SIDE	
A/C External Power: Access Door 121AL	2.55 m (8.37 ft)	On centerline		2.00 m (6.56 ft)

NOTE : Distances are approximate.

2. Technical Specifications

A. External Power Receptacle:
- One receptacle according to MS 90362-3 (without shield MS 17845-1) – 90 kVA.

NOTE : Make sure that for connectors featuring micro switches, the connector is chamfered to properly engage in the receptacle.

B. Power Supply:
- Three-phase, 115/200V, 400 Hz.

C. Electrical Connectors for Servicing:
- AC outlets: HUBBELL 5258
- DC outlets: HUBBELL 7472.

**ON A/C A321-100 A321-200 A321neo A321neo-XLR

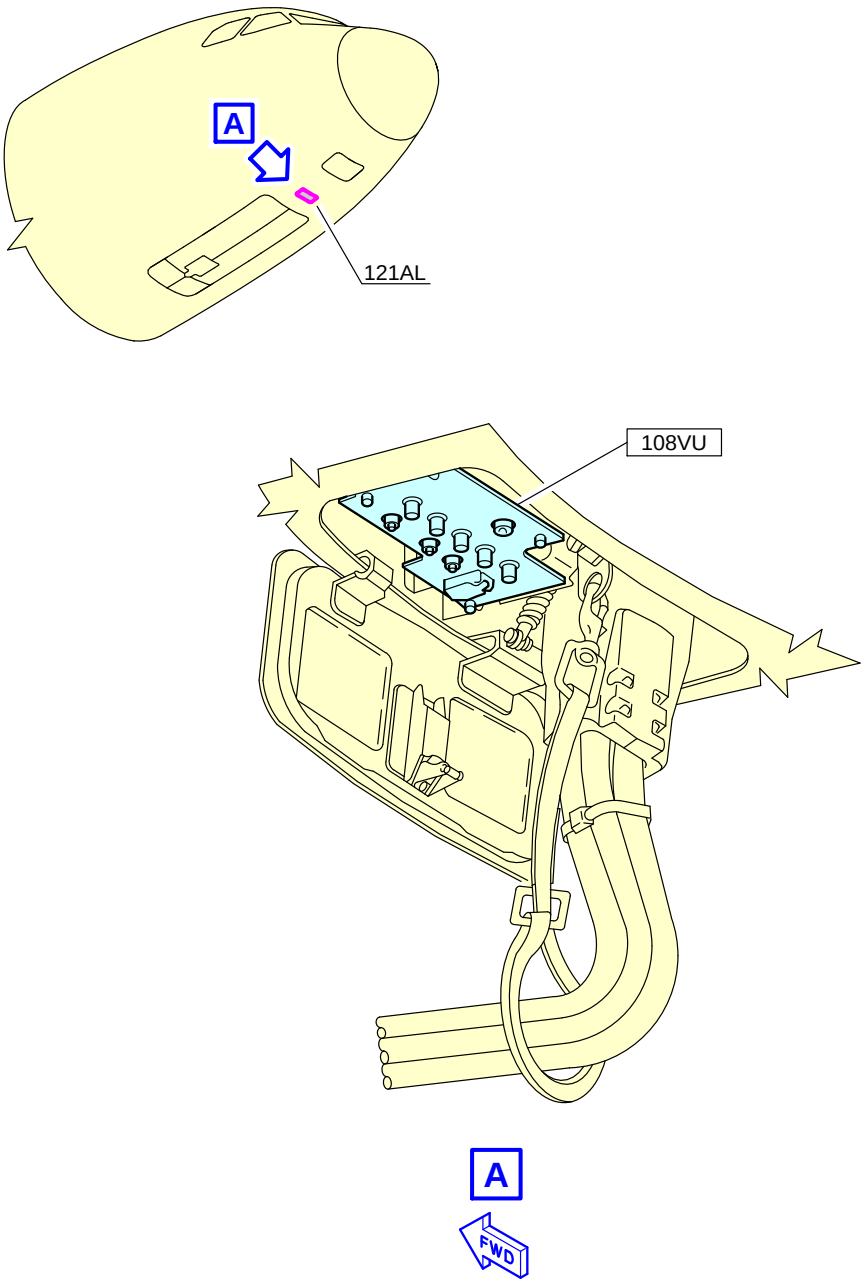

N_AC_050404_1_0010101_01_01

Ground Service Connections
External Power Receptacles
FIGURE-5-4-4-991-001-A01

5-4-5 Oxygen System

****ON A/C A321-100 A321-200 A321neo A321neo-XLR**

Oxygen System

1. Oxygen System

ACCESS	DISTANCE			
	AFT OF NOSE	FROM AIRCRAFT CENTERLINE		MEAN HEIGHT FROM GROUND
		LH SIDE	RH SIDE	
Oxygen Replenishment: Access Door 812	3.45 m (11.32 ft)	1.15 m (3.77 ft)	-	2.60 m (8.53 ft)

2. Technical Specifications
   - One 3/8 in. MIL-DTL 7891 standard service connection.

   NOTE : External charging in the avionics compartment.

**ON A/C A321-100 A321-200 A321neo A321neo-XLR

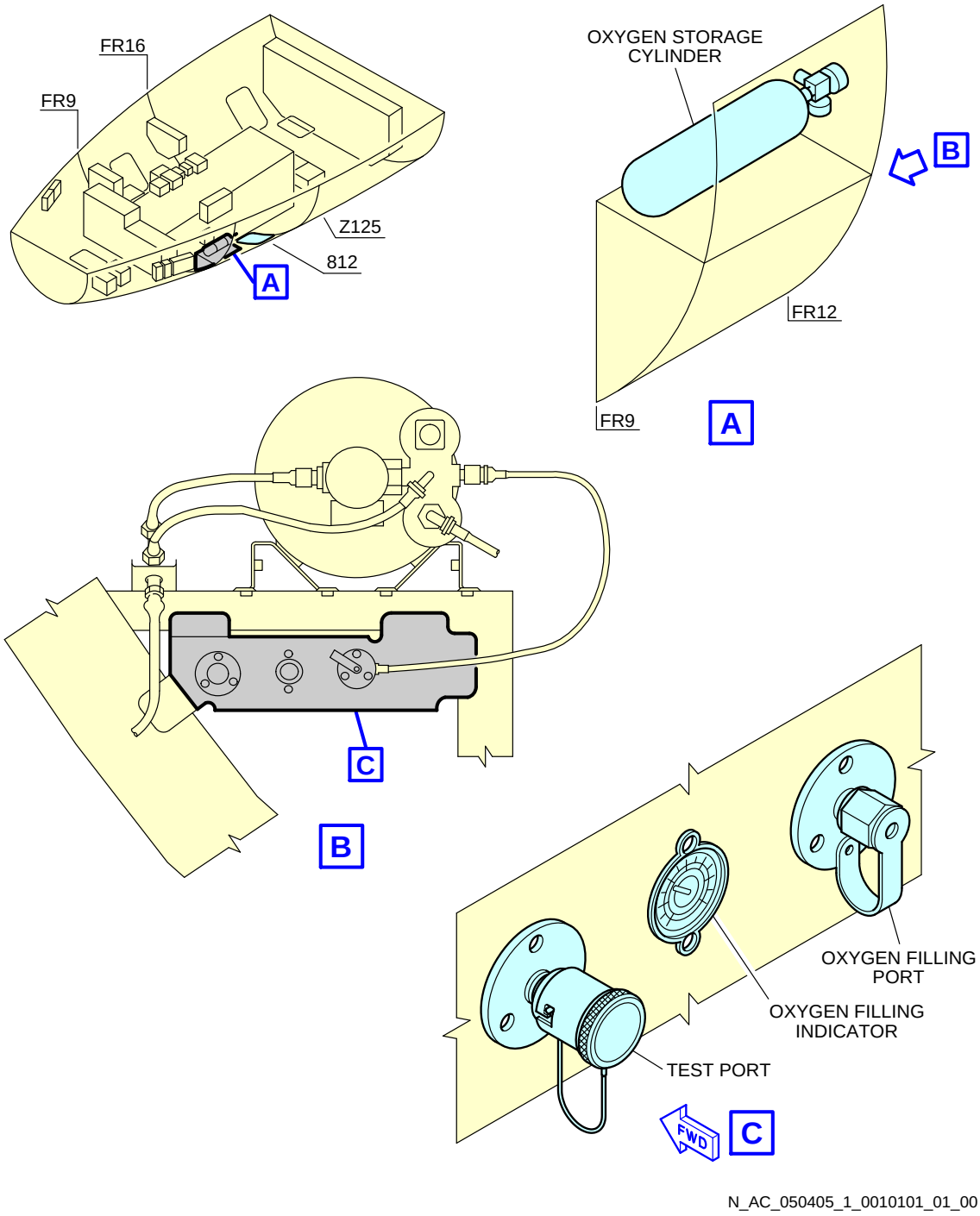

Ground Service Connections
Oxygen System
FIGURE-5-4-5-991-001-A01

5-4-6 Fuel System

****ON A/C A321-100 A321-200 A321neo A321neo-XLR**

Fuel System

1. Refuel/Defuel Control Panel

ACCESS	DISTANCE			
	AFT OF NOSE	POSITION FROM AIRCRAFT CENTERLINE		MEAN HEIGHT FROM GROUND
		LH SIDE	RH SIDE	
Refuel/Defuel Integrated Panel: Access Door 192MB	20.65 m (67.75 ft)	-	1.8 m (5.91 ft)	1.8 m (5.91 ft)

2. Refuel/Defuel Connectors

ACCESS	DISTANCE			
	AFT OF NOSE	POSITION FROM AIRCRAFT CENTERLINE		MEAN HEIGHT FROM GROUND
		LH SIDE	RH SIDE	
Refuel/Defuel Coupling, Left: Access Panel 522HB (Optional)	21.84 m (71.65 ft)	9.83 m (32.25 ft)	-	3.65 m (11.98 ft)
Refuel/Defuel Coupling, Right: Access Panel 622HB	21.84 m (71.65 ft)	-	9.83 m (32.25 ft)	3.65 m (11.98 ft)
Overwing Gravity-Refuel Cap	23.35 m (76.61 ft)	12.4 m (40.68 ft)	12.4 m (40.68 ft)	3.7 m (12.14 ft)

A. Refuel/Defuel Couplings:
- Right wing: one standard ISO 45, 2.5 in.
- Left wing: one optional standard ISO 45, 2.5 in.

B. Refuel Pressure:
- Maximum Pressure: 3.45 bar (50 psi).

C. Average Flow Rate:
- 1250 l/min (330 US gal/min).

3. Overpressure Protectors and NACA Vent Intake

ACCESS	DISTANCE			
	AFT OF NOSE	POSITION FROM AIRCRAFT CENTERLINE		MEAN HEIGHT FROM GROUND
		LH SIDE	RH SIDE	
Surge Tank Overpressure-Protector: Access Panel 550CB (650CB)	24.61 m (80.74 ft)	14.9 m (48.88 ft)	14.9 m (48.88 ft)	4.32 m (14.17 ft)
Wing Tank Overpressure-Protector: Access Panel 540PB (640PB)	24.2 m (79.40 ft)	12.15 m (39.86 ft)	12.15 m (39.86 ft)	4.1 m (13.45 ft)
NACA Vent Intake: Access Panel 550AB (650AB)	24.05 m (78.90 ft)	13.7 m (44.95 ft)	13.7 m (44.95 ft)	4.02 m (13.19 ft)

NOTE : Distances are approximate.

**ON A/C A321-100 A321-200 A321neo A321neo-XLR

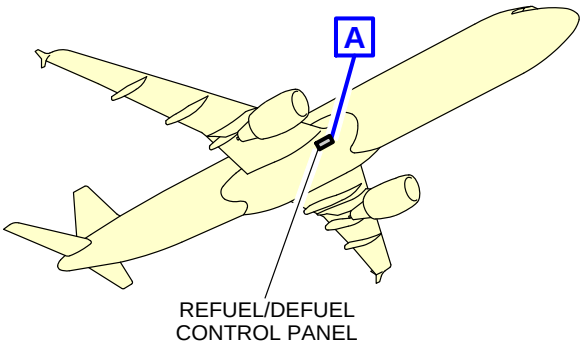

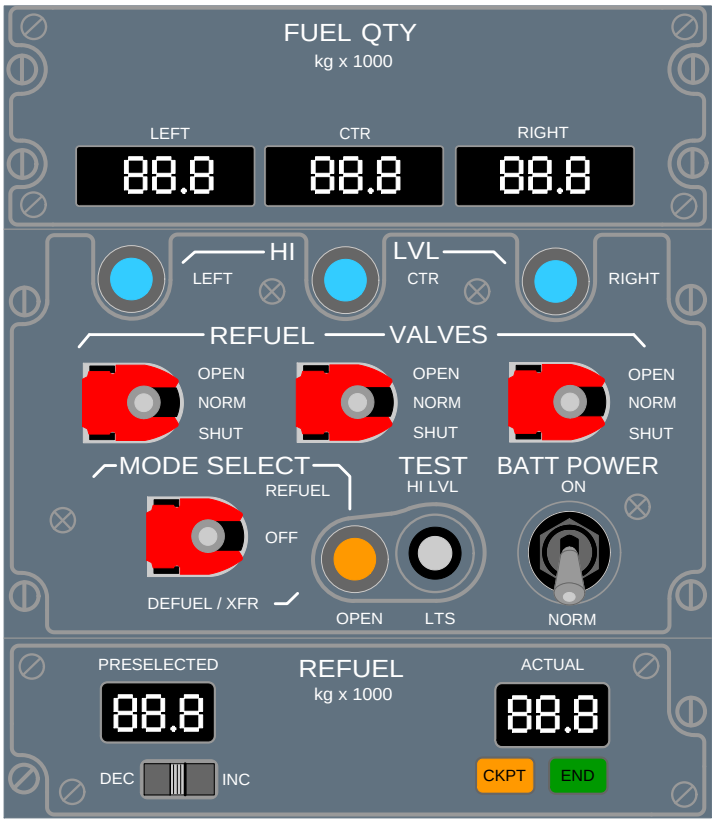

A

NOTE: STANDARD CONFIGURATION OF REFUEL/DEFUEL PANEL.

N_AC_050406_1_0010101_01_00

Ground Service Connections
Refuel/Defuel Control Panel
FIGURE-5-4-6-991-001-A01

**ON A/C A321-100 A321-200 A321neo A321neo-XLR

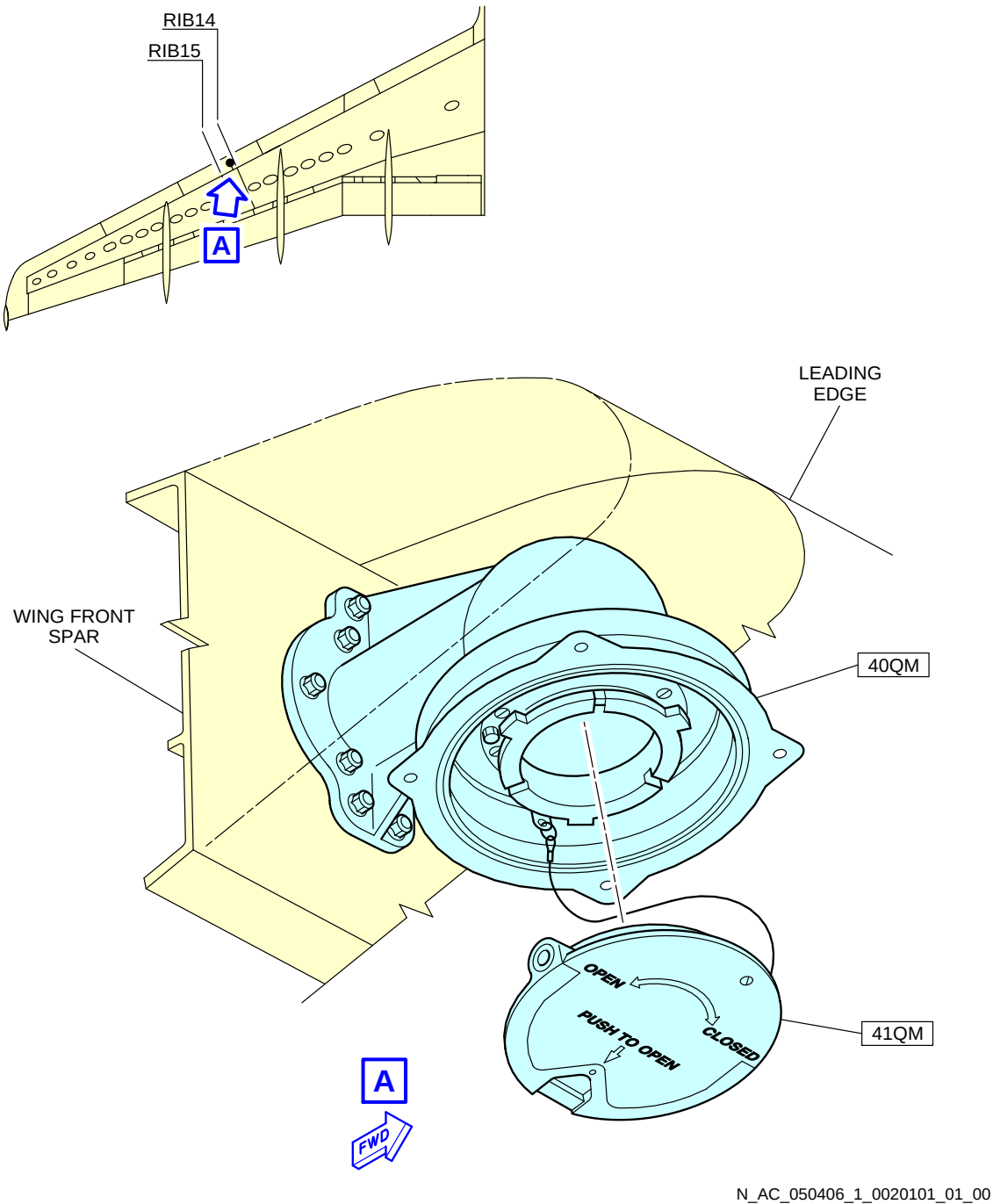

Ground Service Connections
Refuel/Defuel Couplings
FIGURE-5-4-6-991-002-A01

**ON A/C A321-100 A321-200 A321neo A321neo-XLR

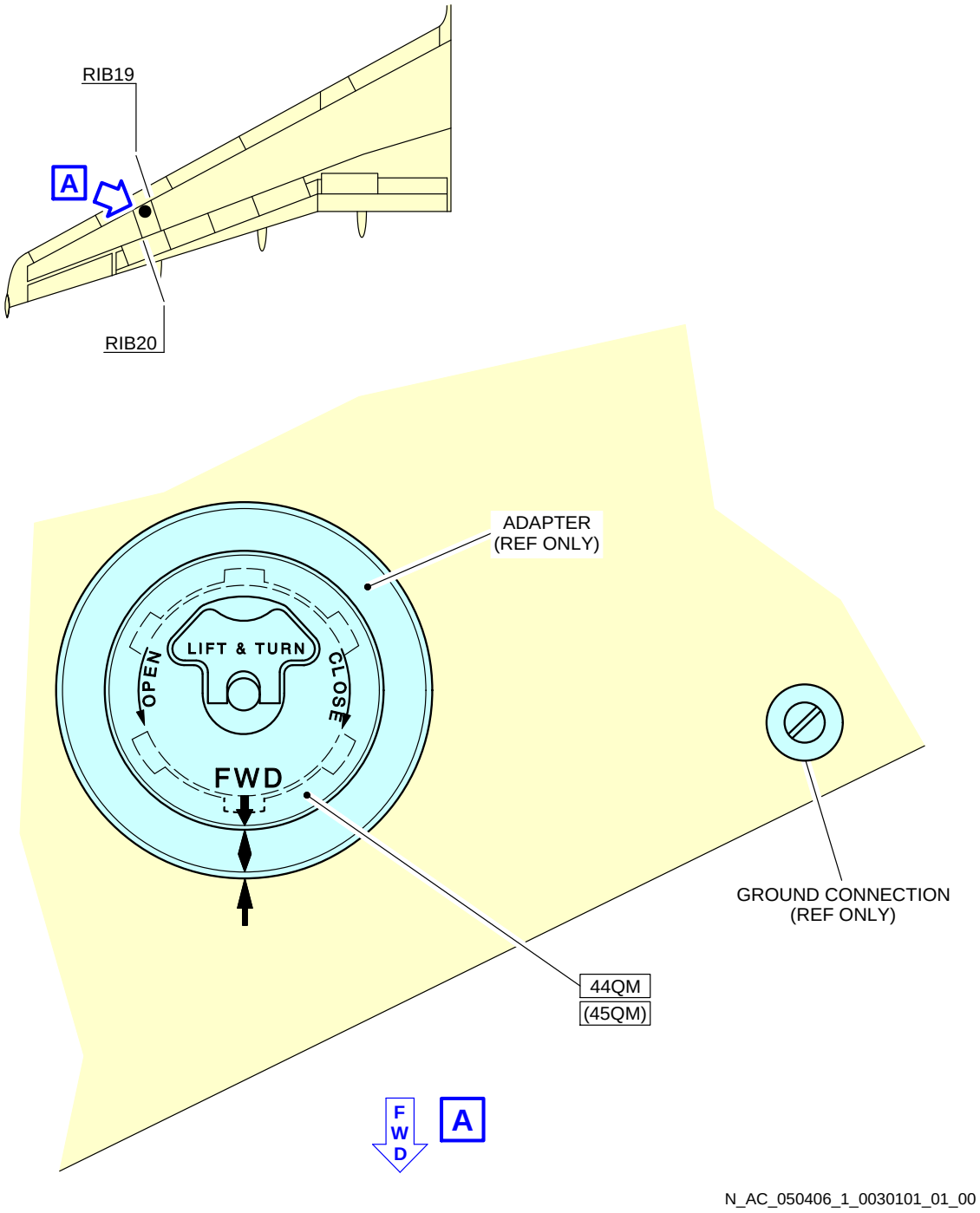

Ground Service Connections
Overwing Gravity-Refuel Cap (If Installed)
FIGURE-5-4-6-991-003-A01

**ON A/C A321-100 A321-200 A321neo A321neo-XLR

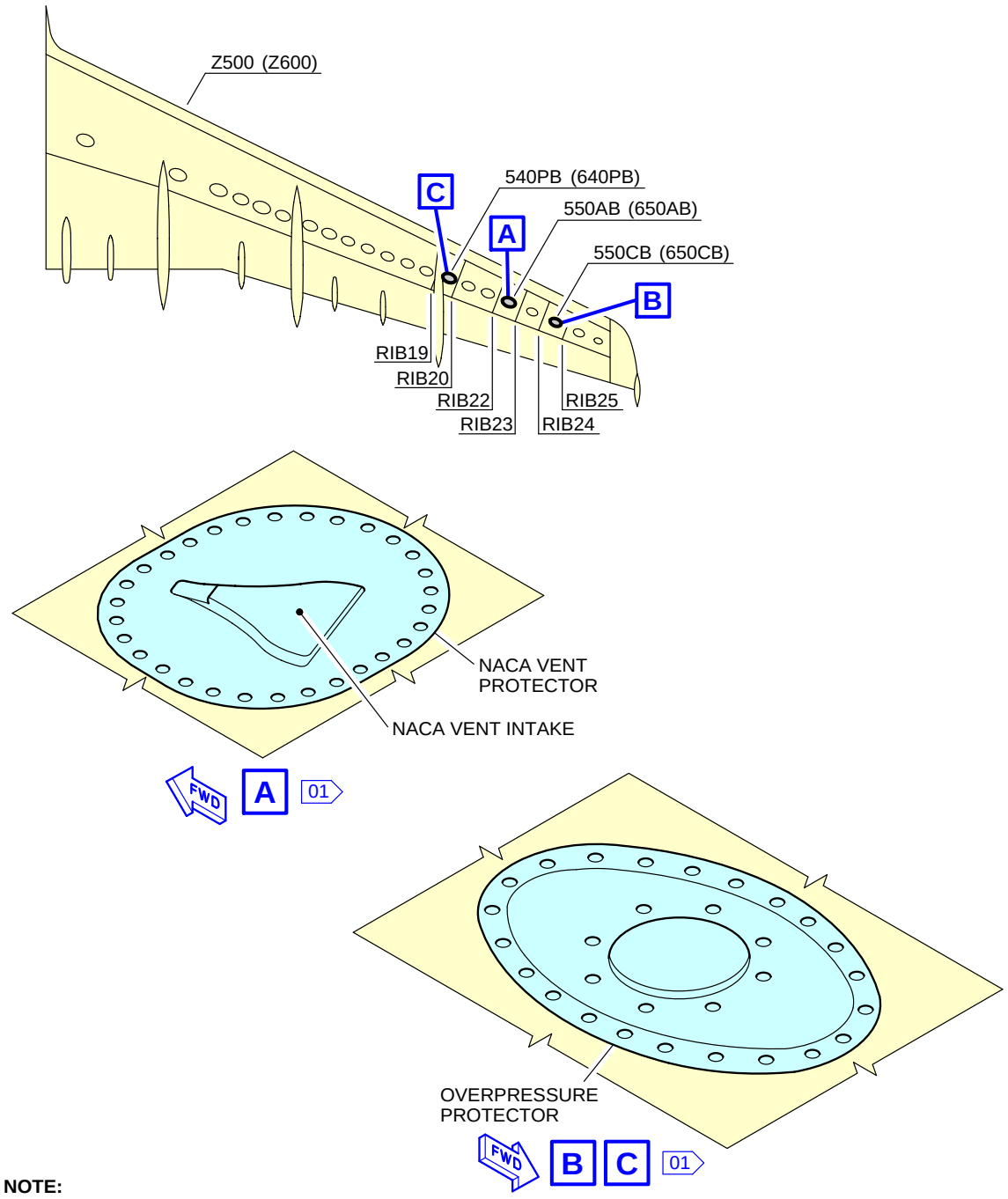

NOTE:
01 LH SHOWN, RH SYMMETRICAL

N_AC_050406_1_0040201_01_00

Ground Service Connections
Overpressure Protectors and NACA Vent Intake
FIGURE-5-4-6-991-004-B01

****ON A/C A321neo-XLR**

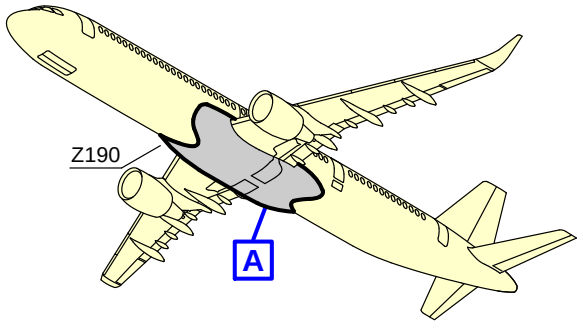

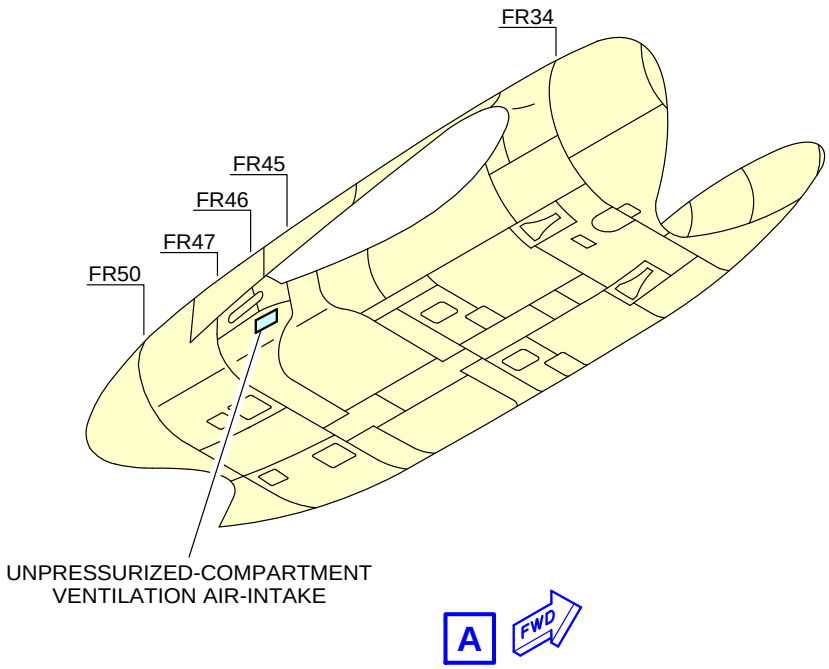

N_AC_050406_1_0060101_01_00

Primary Protection
Unpressurized-Compartment Ventilation Air-Intake
FIGURE-5-4-6-991-006-A01

5-4-7 Pneumatic System

****ON A/C A321-100 A321-200 A321neo A321neo-XLR**

Pneumatic System

1. High Pressure Air Connector

ACCESS	DISTANCE			
	AFT OF NOSE	FROM AIRCRAFT CENTERLINE		MEAN HEIGHT FROM GROUND
		LH SIDE	RH SIDE	
HP Connector: Access Door 191DB	17.25 m (56.59 ft)	0.84 m (2.76 ft)	-	1.76 m (5.77 ft)

A. Connector:
- One standard 3 in. ISO 2026 connection.

2. Low Pressure Air Connector

ACCESS	DISTANCE			
	AFT OF NOSE	FROM AIRCRAFT CENTERLINE		MEAN HEIGHT FROM GROUND
		LH SIDE	RH SIDE	
LP Connector: Access Door 191CB	16.72 m (54.86 ft)	1.11 m (3.64 ft)	-	1.73 m (5.68 ft)

A. Connector:
- One standard 8 in. SAE AS4262 connection.

**ON A/C A321-100 A321-200 A321neo A321neo-XLR

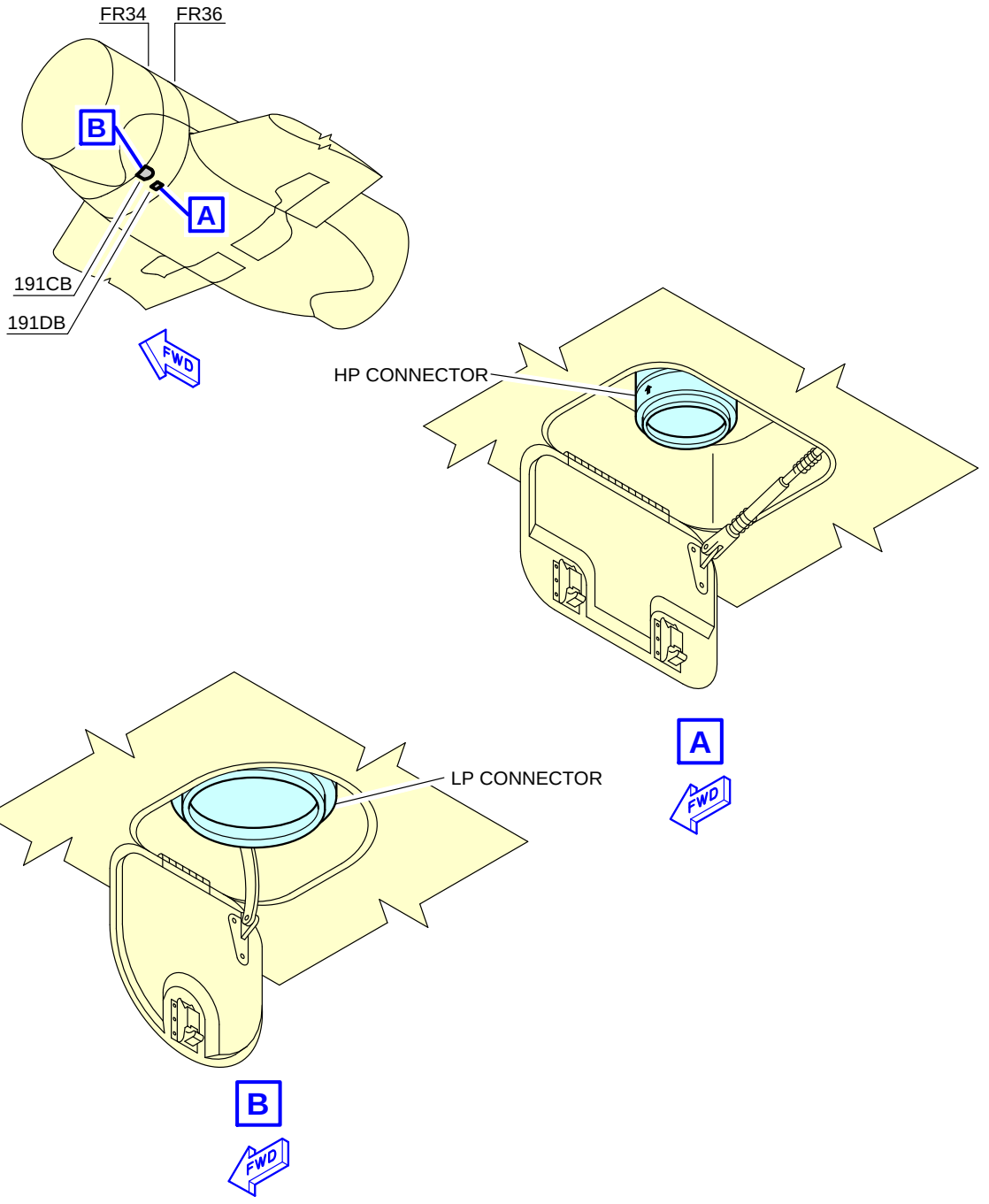

Ground Service Connections
LP and HP Ground Connectors
FIGURE-5-4-7-991-001-A01

5-4-8 Oil System

****ON A/C A321-100 A321-200 A321neo A321neo-XLR**

Oil System

****ON A/C A321-100 A321-200**

1. Engine Oil Replenishment for CFM56 Series Engine (See FIGURE 5-4-8-991-003-A):
   One gravity filling cap and one pressure filling connection per engine.

ACCESS	DISTANCE			
	AFT OF NOSE	FROM AIRCRAFT CENTERLINE		MEAN HEIGHT FROM GROUND
		ENGINE 1 (LH)	ENGINE 2 (RH)	
Engine oil gravity-filling-cap: Access door: 437BL (LH), 447BL (RH)	17.38 m (57.02 ft)	6.63 m (21.75 ft)	4.82 m (15.81 ft)	1.46 m (4.79 ft)
Engine oil pressure-filling-port:	17.26 m (56.63 ft)	6.49 m (21.29 ft)	4.74 m (15.55 ft)	1.42 m (4.66 ft)

NOTE : Distances are approximate.

A. Tank capacity:
   - Full level: 19.6 l (5 US gal),
   - Usable: 9.46 l (3 US gal).

B. Maximum delivery pressure required: 1.72 bar (25 psi).
   Maximum delivery flow required: 180 l/h (48 US gal/h).

2. IDG Oil Replenishment for CFM56 Series Engine (See FIGURE 5-4-8-991-004-A):
   One pressure filling connection per engine: OMP 2506-18 plus one connection overflow: OMP 2505-18.

ACCESS	DISTANCE			
	AFT OF NOSE	FROM AIRCRAFT CENTERLINE		MEAN HEIGHT FROM GROUND
		ENGINE 1 (LH)	ENGINE 2 (RH)	
IDG oil-pressure-filling connection: Access door: 438AR (LH),	16.46 m (54.00 ft)	6.90 m (22.64 ft)	5.52 m (18.11 ft)	0.68 m (2.23 ft)

ACCESS	DISTANCE			
	AFT OF NOSE	FROM AIRCRAFT CENTERLINE		MEAN HEIGHT FROM GROUND
		ENGINE 1 (LH)	ENGINE 2 (RH)	
448AR (RH)				

NOTE : Distances are approximate.

A. Tank capacity: 5 l (1 US gal).

B. Delivery pressure required: 0.34 bar (5 psi) to 2.76 bar (40 psi) at the IDG inlet.

3. Starter Oil Replenishment for CFM56 Series Engine (See FIGURE 5-4-8-991-005-A):
One gravity filling cap per engine.

ACCESS	DISTANCE			
	AFT OF NOSE	FROM AIRCRAFT CENTERLINE		MEAN HEIGHT FROM GROUND
		ENGINE 1 (LH)	ENGINE 2 (RH)	
Starter-oil filling connection:	16.81 m (55.15 ft)	5.30 m (17.39 ft)	6.20 m (20.34 ft)	0.76 m (2.49 ft)

NOTE : Distances are approximate.

A. Tank capacity: 0.8 l (0.21 US gal).

4. Engine Oil Replenishment for IAE V2500 Series Engine (See FIGURE 5-4-8-991-006-B):
One gravity filling cap per engine.

ACCESS	DISTANCE			
	AFT OF NOSE	FROM AIRCRAFT CENTERLINE		MEAN HEIGHT FROM GROUND
		ENGINE 1 (LH)	ENGINE 2 (RH)	
Engine oil gravity-filling-cap: Access door: 437BL (LH), 447BL (RH)	16.50 m (54.13 ft)	6.56 m (21.52 ft)	4.92 m (16.14 ft)	1.22 m (4.00 ft)

NOTE : Distances are approximate.

A. Tank capacity:
- Full level: 28 l (7 US gal),

- Usable: 23.50 l (6 US gal).

5. IDG Oil Replenishment for IAE V2500 Series Engine (See FIGURE 5-4-8-991-007-B):
One pressure filling connection per engine: 2506-2 plus one overflow connection: 2505-2.

ACCESS	DISTANCE			
	AFT OF NOSE	FROM AIRCRAFT CENTERLINE		MEAN HEIGHT FROM GROUND
		ENGINE 1 (LH)	ENGINE 2 (RH)	
IDG oil-pressure-filling connection:	17.06 m (55.97 ft)	5.42 m (17.78 ft)	6.04 m (19.82 ft)	0.80 m (2.62 ft)

NOTE : Distances are approximate.

A. Tank capacity: 4.10 l (1 US gal).

6. Starter Oil Replenishment for IAE V2500 Series Engine (See FIGURE 5-4-8-991-008-B):
One gravity filling cap per engine.

ACCESS	DISTANCE			
	AFT OF NOSE	FROM AIRCRAFT CENTERLINE		MEAN HEIGHT FROM GROUND
		ENGINE 1 (LH)	ENGINE 2 (RH)	
Starter-oil filling connection:	19.66 m (64.50 ft)	5.30 m (17.39 ft)	6.14 m (20.14 ft)	0.75 m (2.46 ft)

NOTE : Distances are approximate.

A. Tank capacity: 0.35 l (0.09 US gal).

****ON A/C A321neo A321neo-XLR**

7. Engine Oil Replenishment for CFM LEAP-1A Series Engine (See FIGURE 5-4-8-991-010-A):
One gravity filling cap and one pressure filling connection per engine.

ACCESS	DISTANCE			
	AFT OF NOSE	FROM AIRCRAFT CENTERLINE		MEAN HEIGHT FROM GROUND
		ENGINE 1 (LH)	ENGINE 2 (RH)	
Engine oil gravity-filling-cap: Access doors: 438BR and 448BR.	TBD	TBD	TBD	TBD

ACCESS	DISTANCE			
	AFT OF NOSE	FROM AIRCRAFT CENTERLINE		MEAN HEIGHT FROM GROUND
		ENGINE 1 (LH)	ENGINE 2 (RH)	
Engine oil pressure-filling-port: Access doors: 438BR and 448BR.	TBD	TBD	TBD	TBD

NOTE : Distances are approximate.

A. Tank capacity:
- Full level: 23.45 l (6 US gal)
- Usable: 18.7 l (5 US gal)
- Consumable level: 7.7 l (2 US gal).

8. IDG Oil Replenishment for CFM LEAP-1A Series Engine (See FIGURE 5-4-8-991-011-A):

ACCESS	DISTANCE			
	AFT OF NOSE	FROM AIRCRAFT CENTERLINE		MEAN HEIGHT FROM GROUND
		ENGINE 1 (LH)	ENGINE 2 (RH)	
IDG oil-pressure-filling connection: Access doors: 437AL (LH), 438AR (LH), 447AL (RH) and 448AR (RH).	TBD	TBD	TBD	TBD

NOTE : Distances are approximate.

A. IDG oil tank capacity: 5.7 l (2 US gal) (additional amount of 0.9 l (0.2 US gal) is necessary to ensure a complete filling).

B. Maximum servicing pressure:
- 0.5 bar (7 psi), when "DESHONS" tool is used.
- 2.41 bar (35 psi), when other tools are used.

9. Starter Oil Replenishment for CFM LEAP-1A Series Engine (See FIGURE 5-4-8-991-012-A):
One gravity filling cap per engine.

ACCESS	DISTANCE			
	AFT OF NOSE	FROM AIRCRAFT CENTERLINE		MEAN HEIGHT FROM GROUND
		ENGINE 1 (LH)	ENGINE 2 (RH)	
Starter-oil filling connection: Access doors: 438BR and 448BR.	TBD	TBD	TBD	TBD

NOTE : Distances are approximate.

A. Tank capacity: 0.5 l (0.1 US gal).

10. Engine Oil Replenishment for PW 1100G Series Engine (See FIGURE 5-4-8-991-013-A):
One gravity filling cap per engine.

ACCESS	DISTANCE			
	AFT OF NOSE	FROM AIRCRAFT CENTERLINE		MEAN HEIGHT FROM GROUND
		ENGINE 1 (LH)	ENGINE 2 (RH)	
Engine oil gravity-filling-cap: Access doors: 437BL and 447BL.	TBD	TBD	TBD	TBD

NOTE : Distances are approximate.

A. Tank capacity:
- Full level: 33.02 l (9 US gal)
- Usable: 9.08 l (2 US gal).

11. IDG Oil Replenishment for PW 1100G Series Engine (See FIGURE 5-4-8-991-014-A):

ACCESS	DISTANCE			
	AFT OF NOSE	FROM AIRCRAFT CENTERLINE		MEAN HEIGHT FROM GROUND
		ENGINE 1 (LH)	ENGINE 2 (RH)	
IDG oil-pressure-filling connection:	TBD	TBD	TBD	TBD

ACCESS	DISTANCE			
	AFT OF NOSE	FROM AIRCRAFT CENTERLINE		MEAN HEIGHT FROM GROUND
		ENGINE 1 (LH)	ENGINE 2 (RH)	
Access doors: 437AL (LH), 438AR (LH), 447AL (RH), 448AR (RH), 451AL (LH), 452AR (LH), 461AL (RH) and 462AR (RH).				

NOTE : Distances are approximate.

A. IDG oil tank capacity: 5.4 l (1 US gal) plus 1.93 l (0.5 US gal) for external system (Air Oil Heat Exchanger / Oil Cooler).
Usable capacity: 0.6 l (0.2 US gal).

B. Maximum delivery pressure required: 2.41 bar (35 psi).
Maximum delivery flow required: Not specified, based on the requirements from the supplier.

12. Starter Oil Replenishment for PW 1100G Series Engine (See FIGURE 5-4-8-991-015-A):
One gravity filling cap per engine.

ACCESS	DISTANCE			
	AFT OF NOSE	FROM AIRCRAFT CENTERLINE		MEAN HEIGHT FROM GROUND
		ENGINE 1 (LH)	ENGINE 2 (RH)	
Starter oil-filling connection:	TBD	TBD	TBD	TBD

NOTE : Distances are approximate.

A. Starter lubrication is a part of the engine oil system, no dedicated supply/tank.

****ON A/C A321-100 A321-200 A321neo A321neo-XLR**

13. APU Oil System (See FIGURE 5-4-8-991-009-A):
APU oil gravity-filling-cap.

ACCESS	DISTANCE			
	AFT OF NOSE	FROM AIRCRAFT CENTERLINE		MEAN HEIGHT FROM GROUND
		ENGINE 1 (LH)	ENGINE 2 (RH)	
GTCP 36-300	42.42 m	0.30 m	-	4.83 m

ACCESS	DISTANCE			
	AFT OF NOSE	FROM AIRCRAFT CENTERLINE		MEAN HEIGHT FROM GROUND
		ENGINE 1 (LH)	ENGINE 2 (RH)	
	(139.17 ft)	(0.98 ft)		(15.85 ft)
APS 3200	42.42 m (139.17 ft)	0.30 m (0.98 ft)	-	4.78 m (15.68 ft)
131-9	42.32 m (138.85 ft)	0.35 m (1.15 ft)	-	4.32 m (14.17 ft)

NOTE : Distances are approximate.

A. Tank capacity (usable):
- APU type GTCP 36-300: 6.20 l (2 US gal),
- APU type APS 3200: 5.40 l (1 US gal),
- APU type 131-9: 6.25 l (2 US gal).

**ON A/C A321-100 A321-200

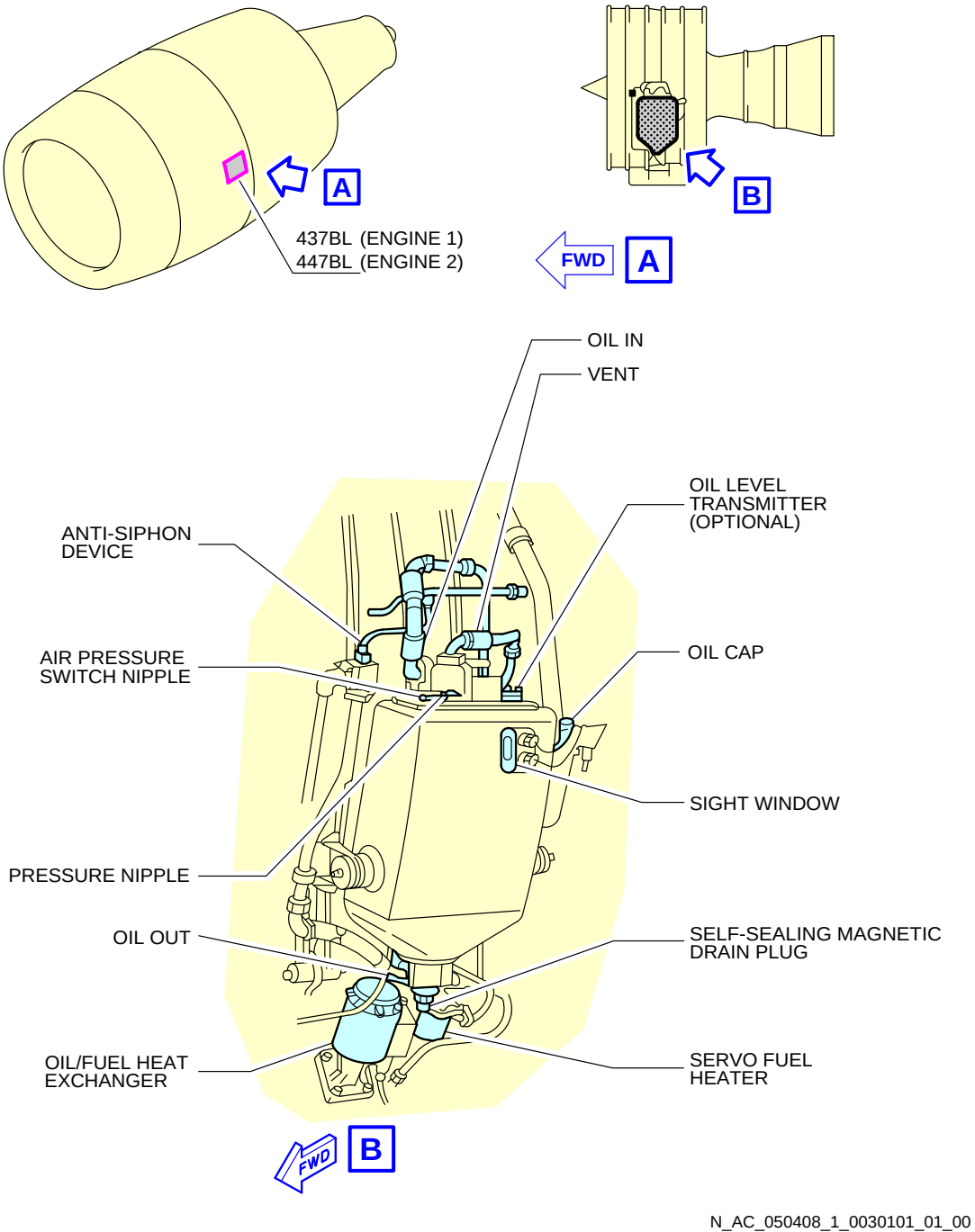

Ground Service Connections
Engine Oil Tank – CFM56 Series Engine
FIGURE-5-4-8-991-003-A01

**ON A/C A321-100 A321-200

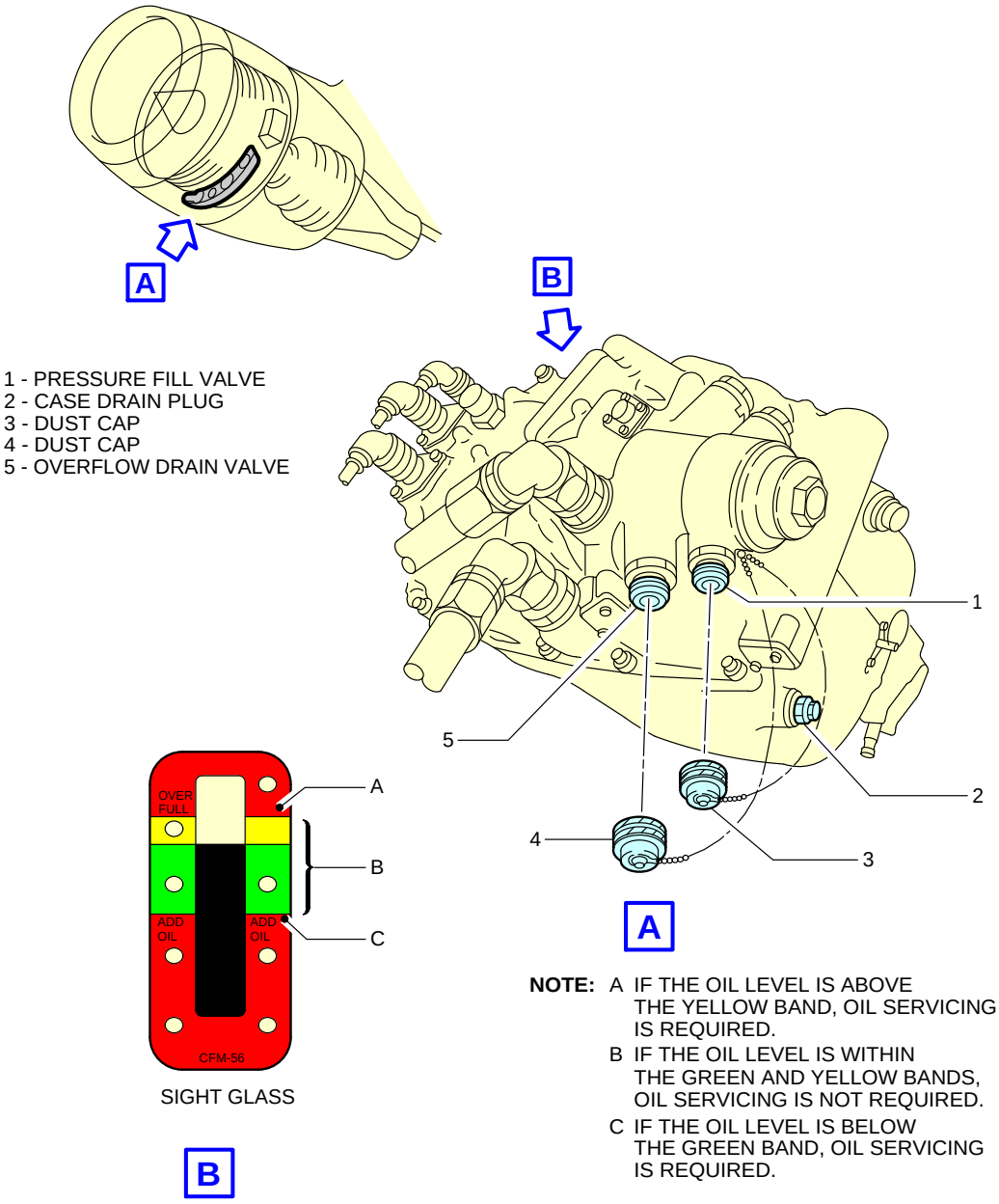

N_AC_050408_1_0040101_01_00

Ground Service Connections
IDG Oil Tank – CFM56 Series Engine
FIGURE-5-4-8-991-004-A01

**ON A/C A321-100 A321-200

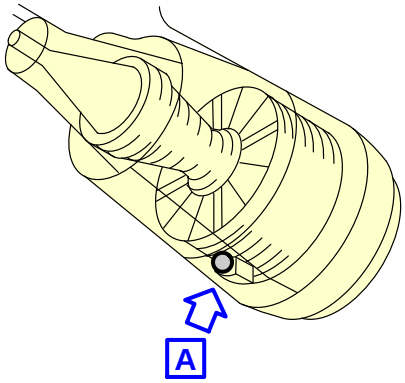

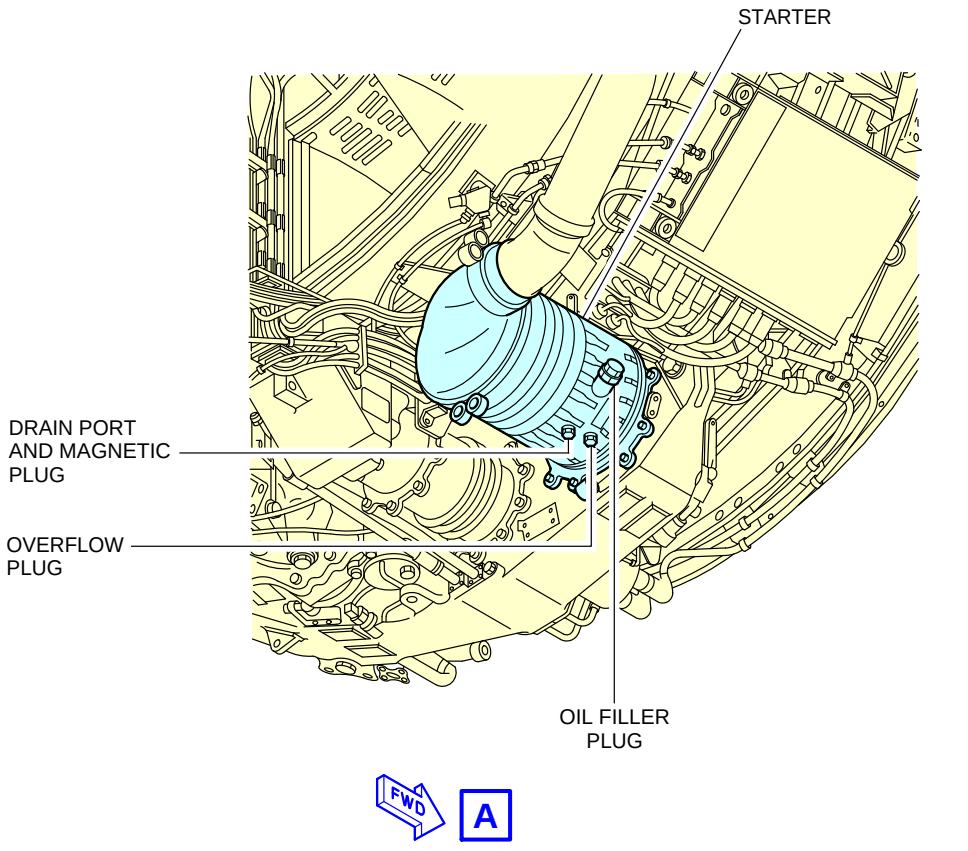

Ground Service Connections
Starter Oil Tank – CFM56 Series Engine
FIGURE-5-4-8-991-005-A01

**ON A/C A321-100 A321-200

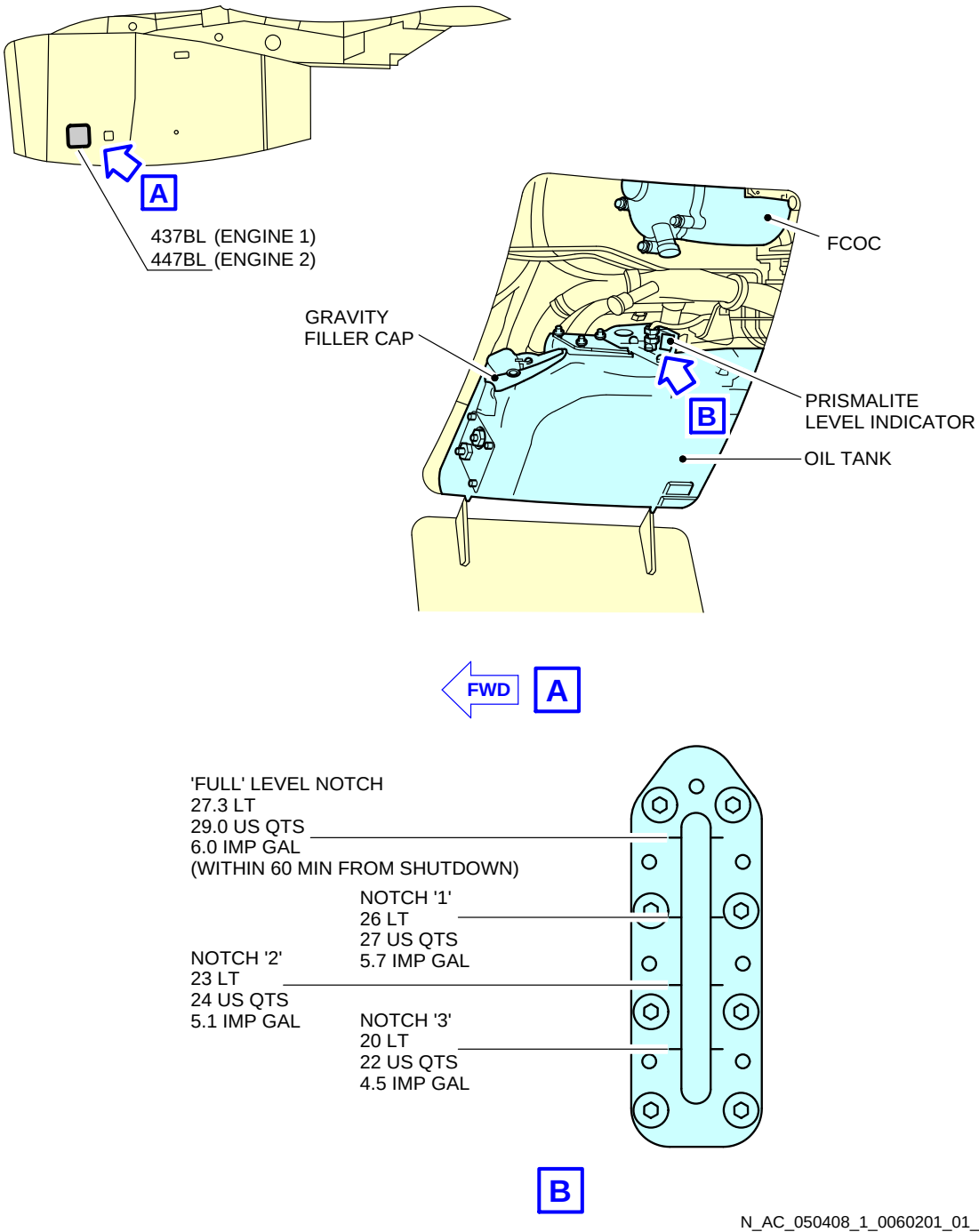

Ground Service Connections
Engine Oil Tank – IAE V2500 Series Engine
FIGURE-5-4-8-991-006-B01

**ON A/C A321-100 A321-200

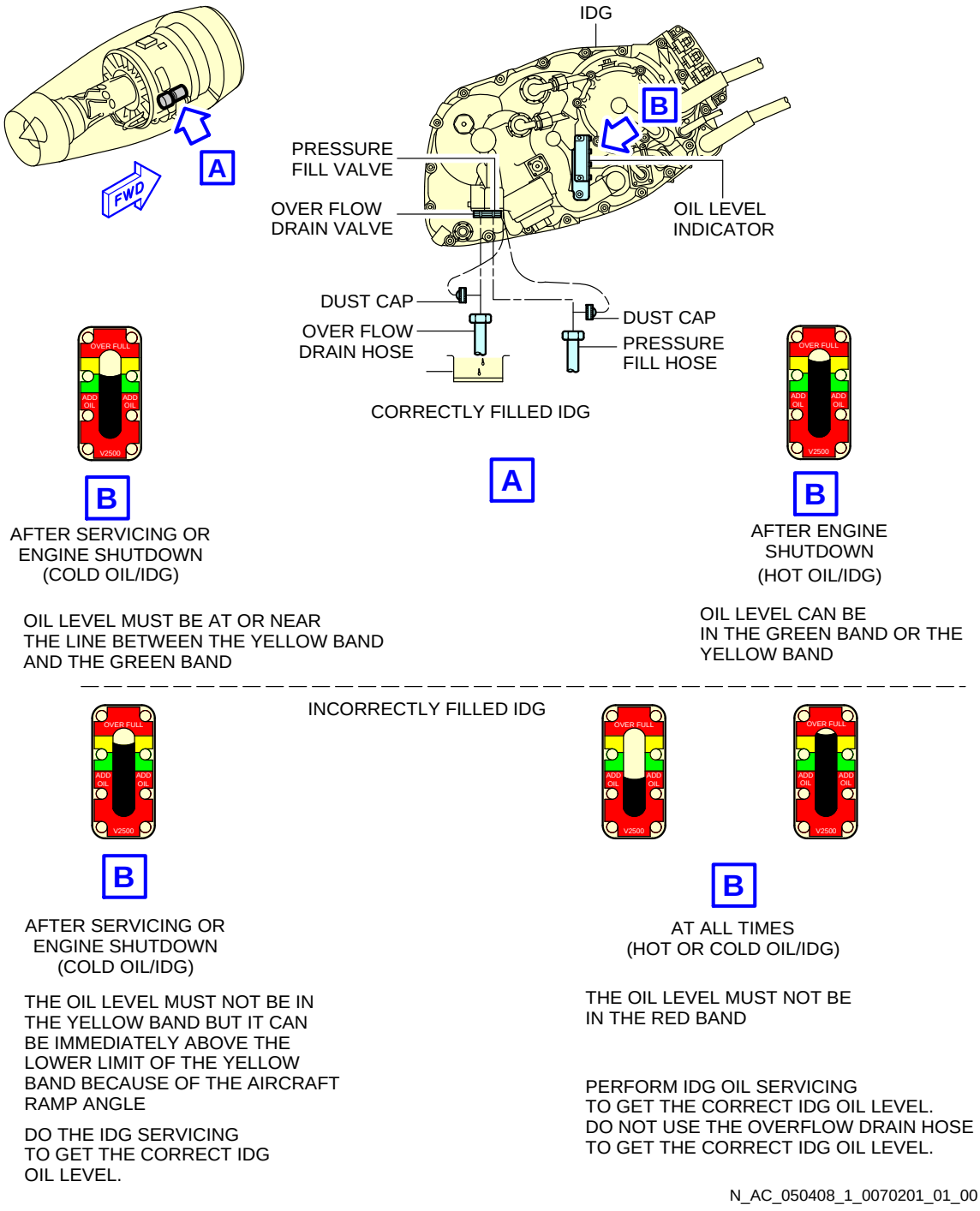

Ground Service Connections
IDG Oil Tank – IAE V2500 Series Engine
FIGURE-5-4-8-991-007-B01

**ON A/C A321-100 A321-200

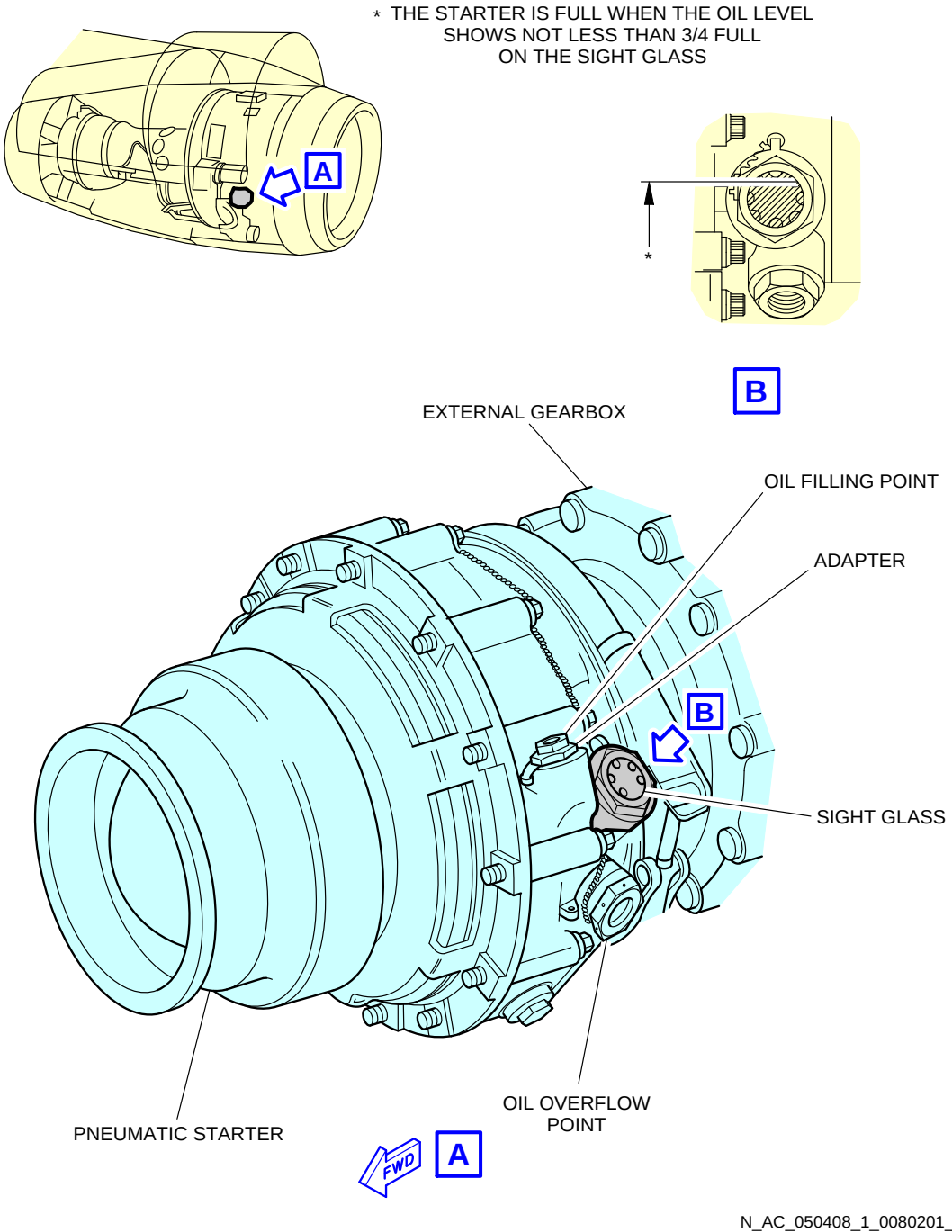

Ground Service Connections
Starter Oil Tank – IAE V2500 Series Engine
FIGURE-5-4-8-991-008-B01

**ON A/C A321-100 A321-200 A321neo A321neo-XLR

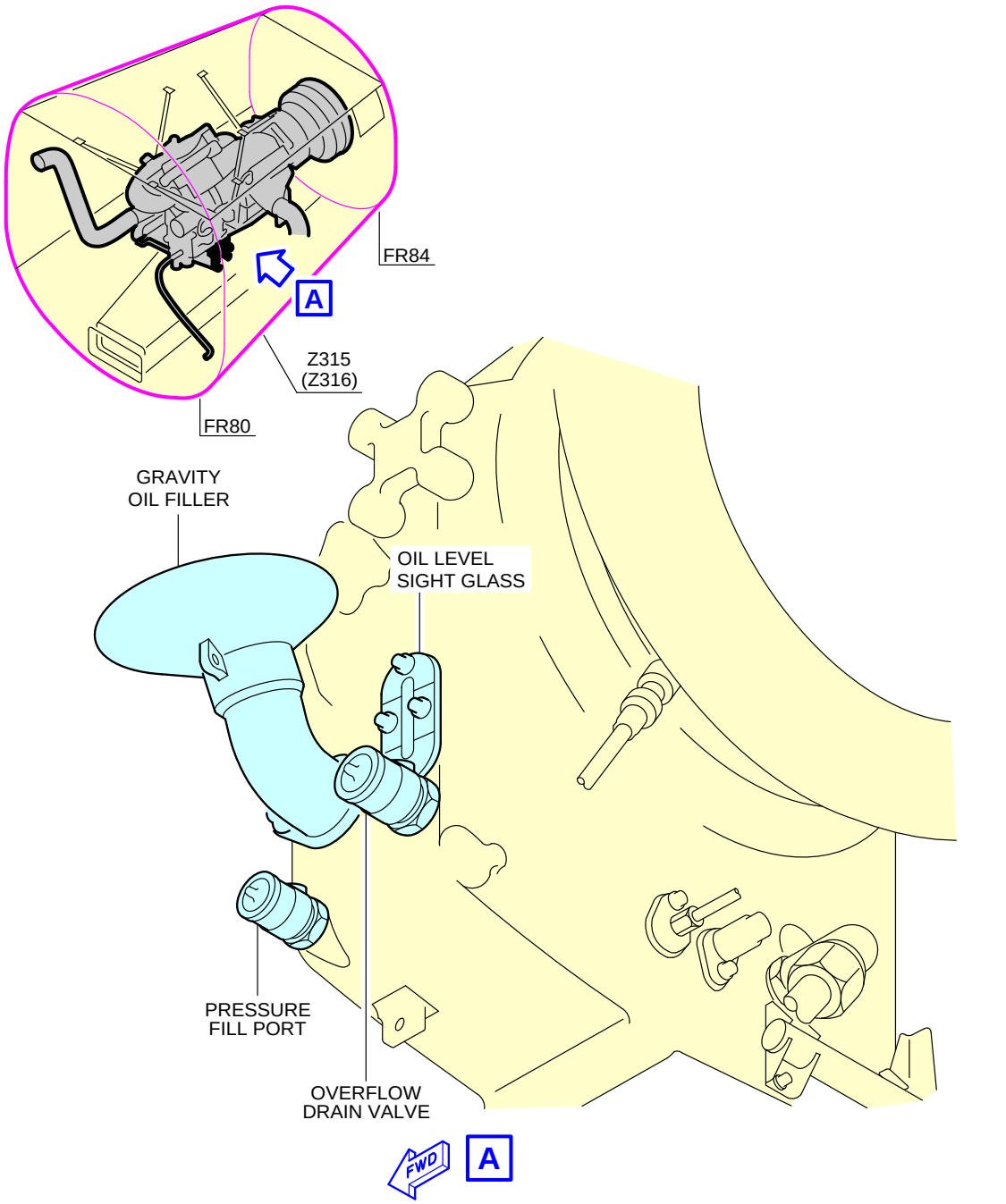

Ground Service Connections
APU Oil Tank
FIGURE-5-4-8-991-009-A01

**ON A/C A321neo A321neo-XLR

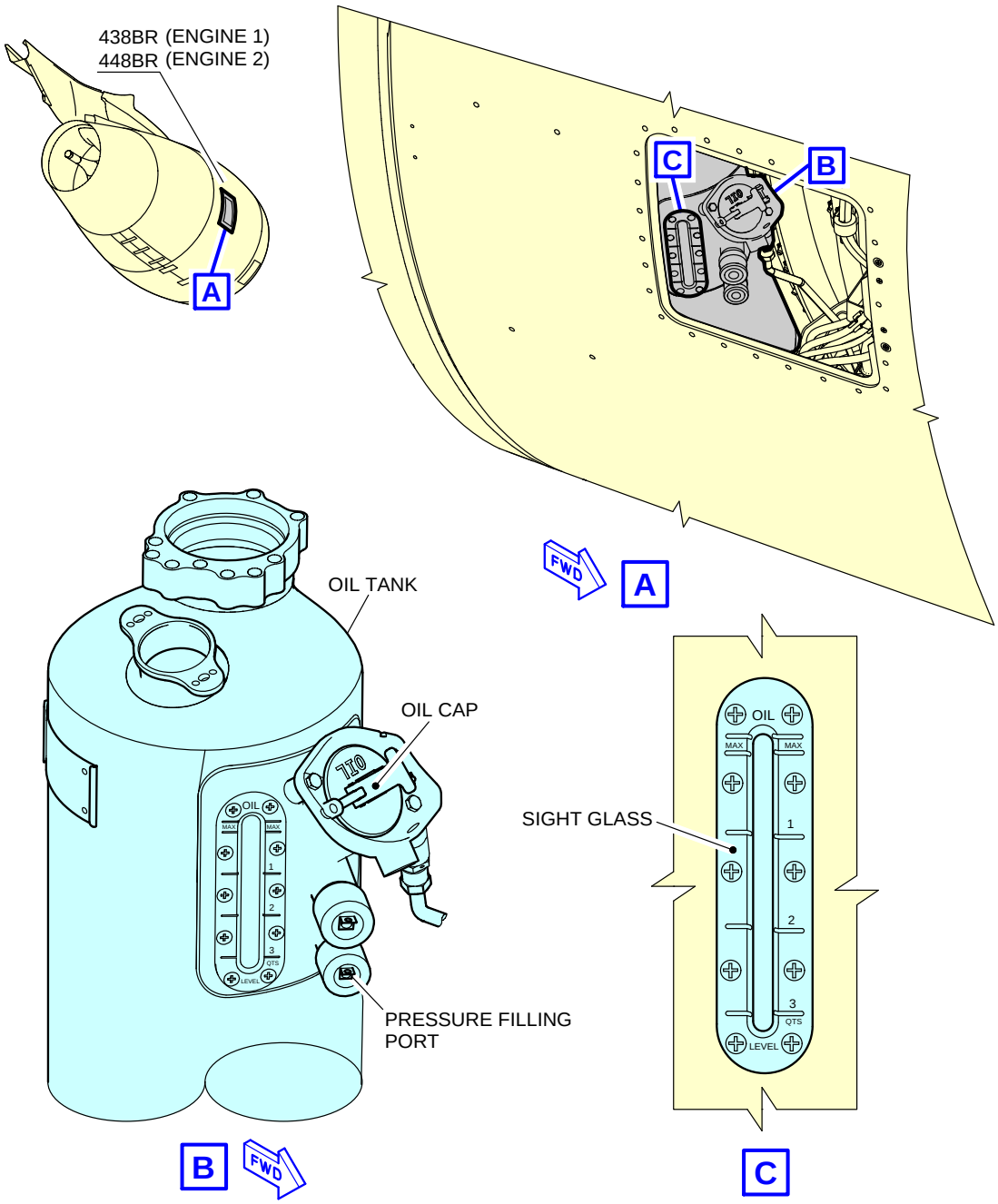

N_AC_050408_1_0100101_01_00

Ground Service Connections
Engine Oil Tank – CFM LEAP-1A Series Engine
FIGURE-5-4-8-991-010-A01

**ON A/C A321neo A321neo-XLR

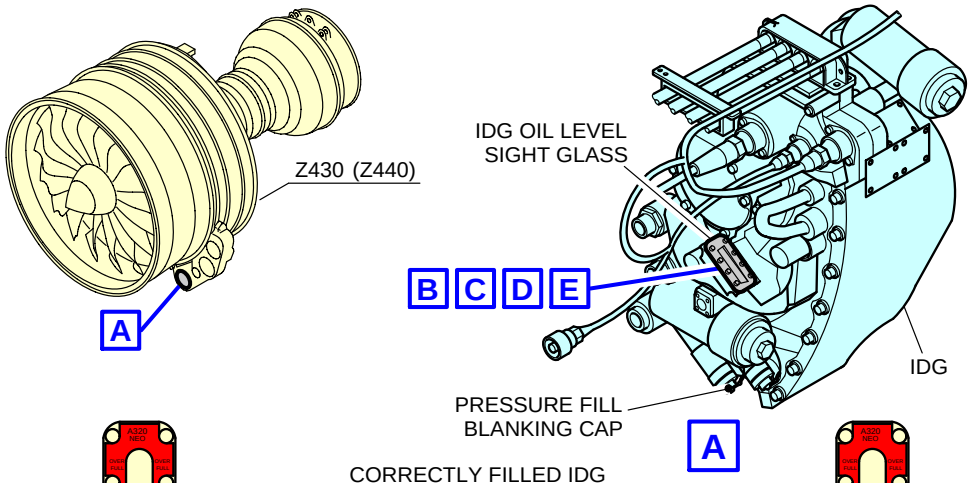

NOTE:

01 IF THE OIL LEVEL IS NOT IN THE TOP OF THE GREEN BAND WITH A TOLERANCE OF ± 2 mm, IT IS RECOMMENDED TO FILL THE IDG AGAIN.

N_AC_050408_1_0110101_01_00

Ground Service Connections
IDG Oil Tank – CFM LEAP-1A Series Engine
FIGURE-5-4-8-991-011-A01

**ON A/C A321neo A321neo-XLR

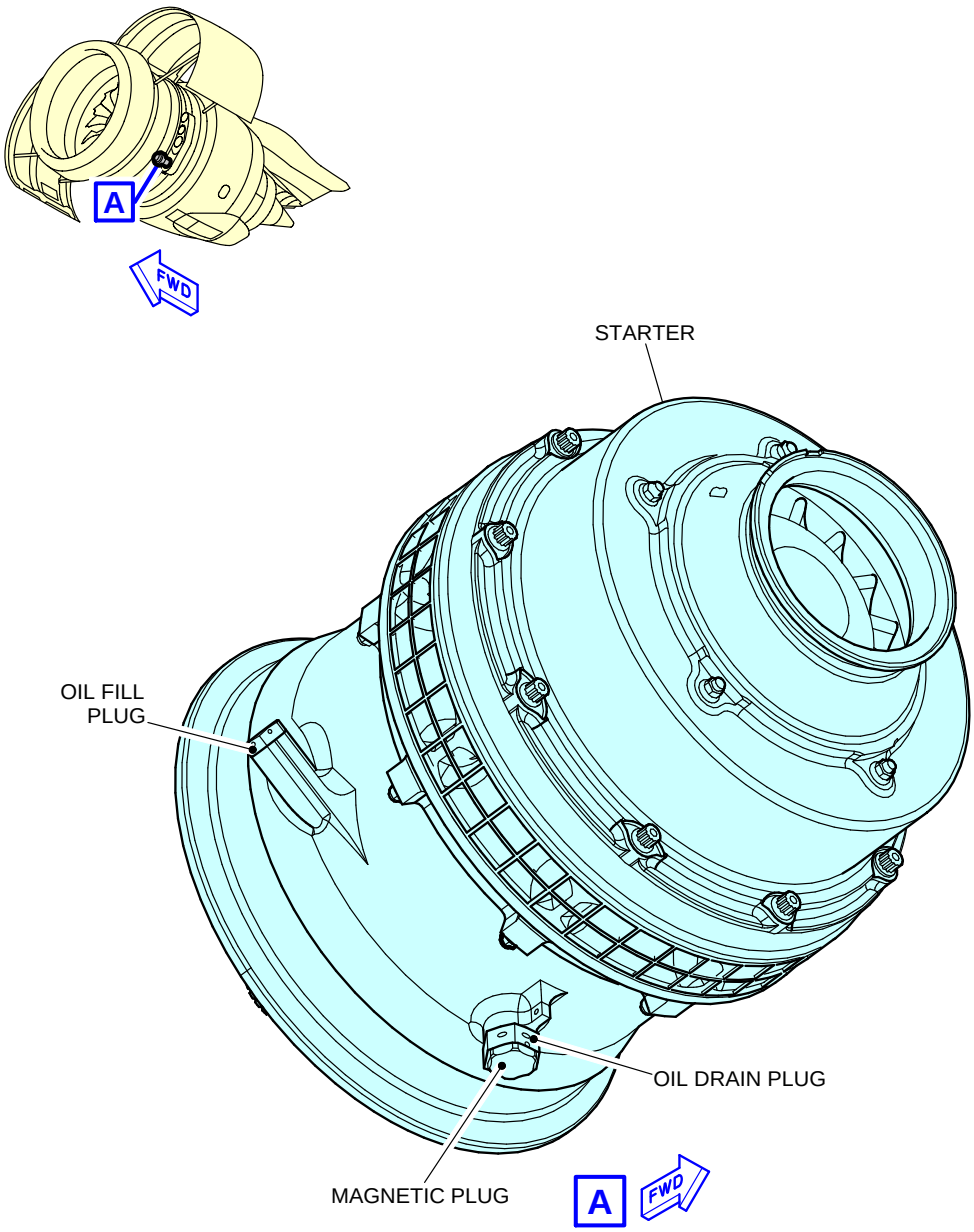

N_AC_050408_1_0120101_01_00

Ground Service Connections
Starter Oil Tank – CFM LEAP-1A Series Engine
FIGURE-5-4-8-991-012-A01

**ON A/C A321neo A321neo-XLR

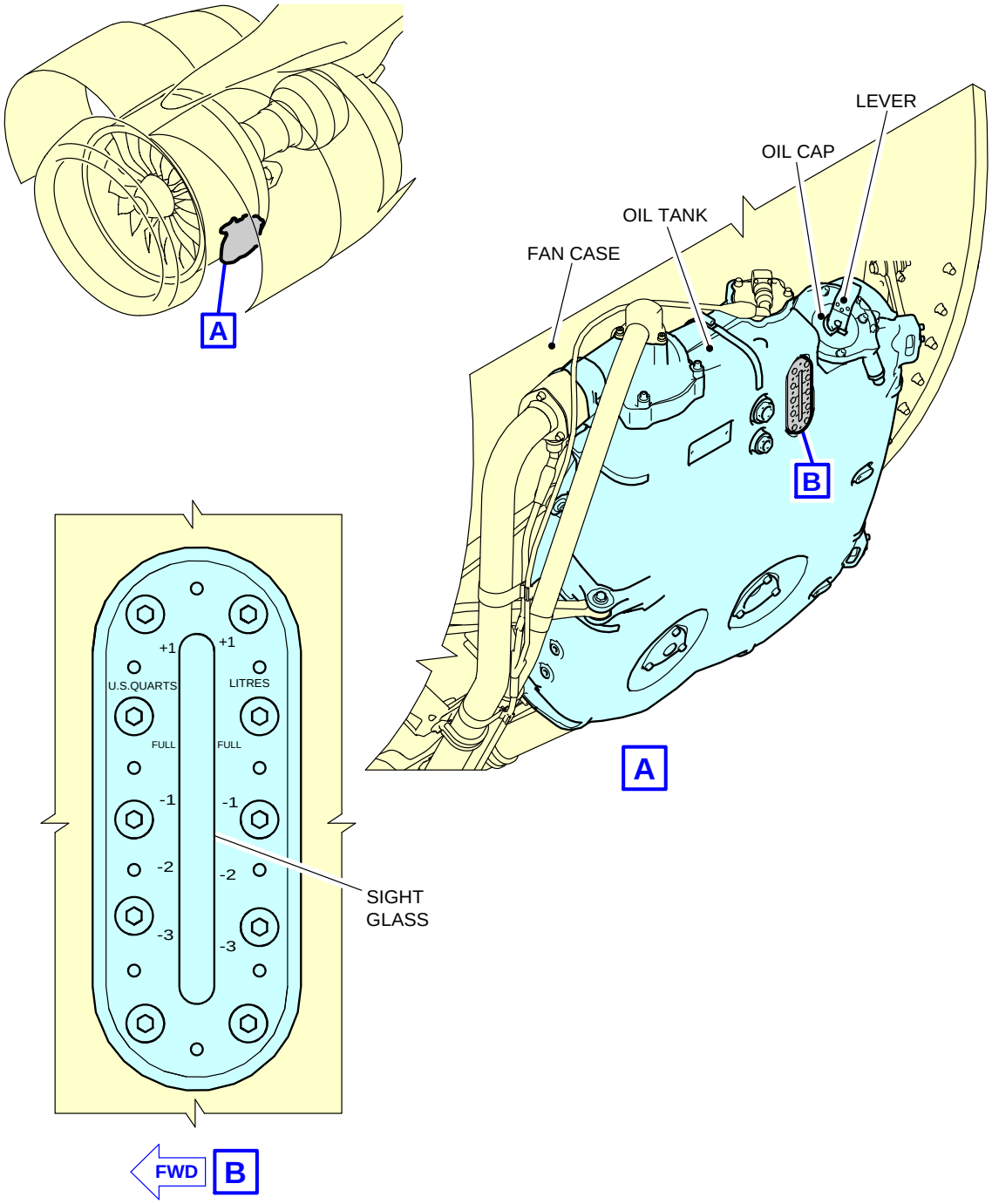

N_AC_050408_1_0130101_01_00

Ground Service Connections
Engine Oil Tank – PW 1100G Series Engine
FIGURE-5-4-8-991-013-A01

**ON A/C A321neo A321neo-XLR

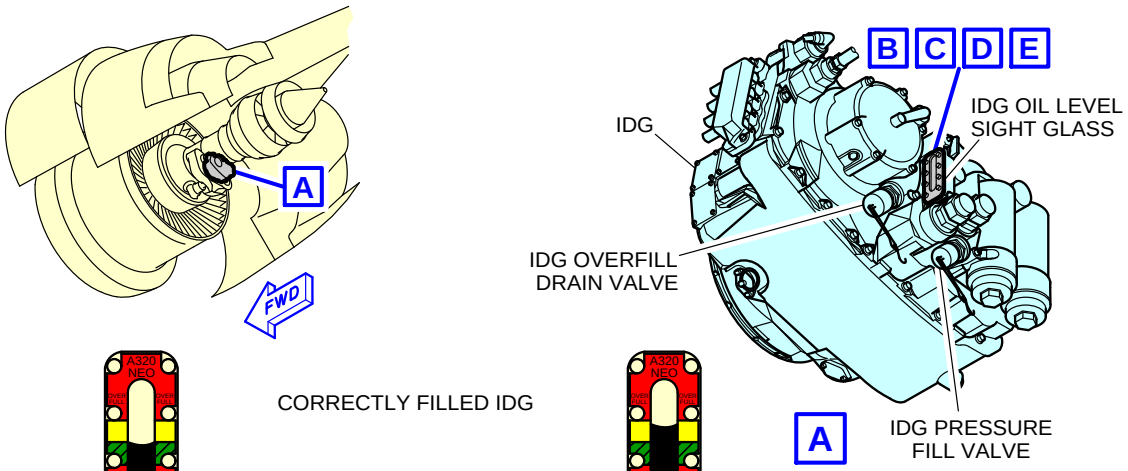

N_AC_050408_1_0140101_01_00

Ground Service Connections
IDG Oil Tank – PW 1100G Series Engine
FIGURE-5-4-8-991-014-A01

**ON A/C A321neo A321neo-XLR

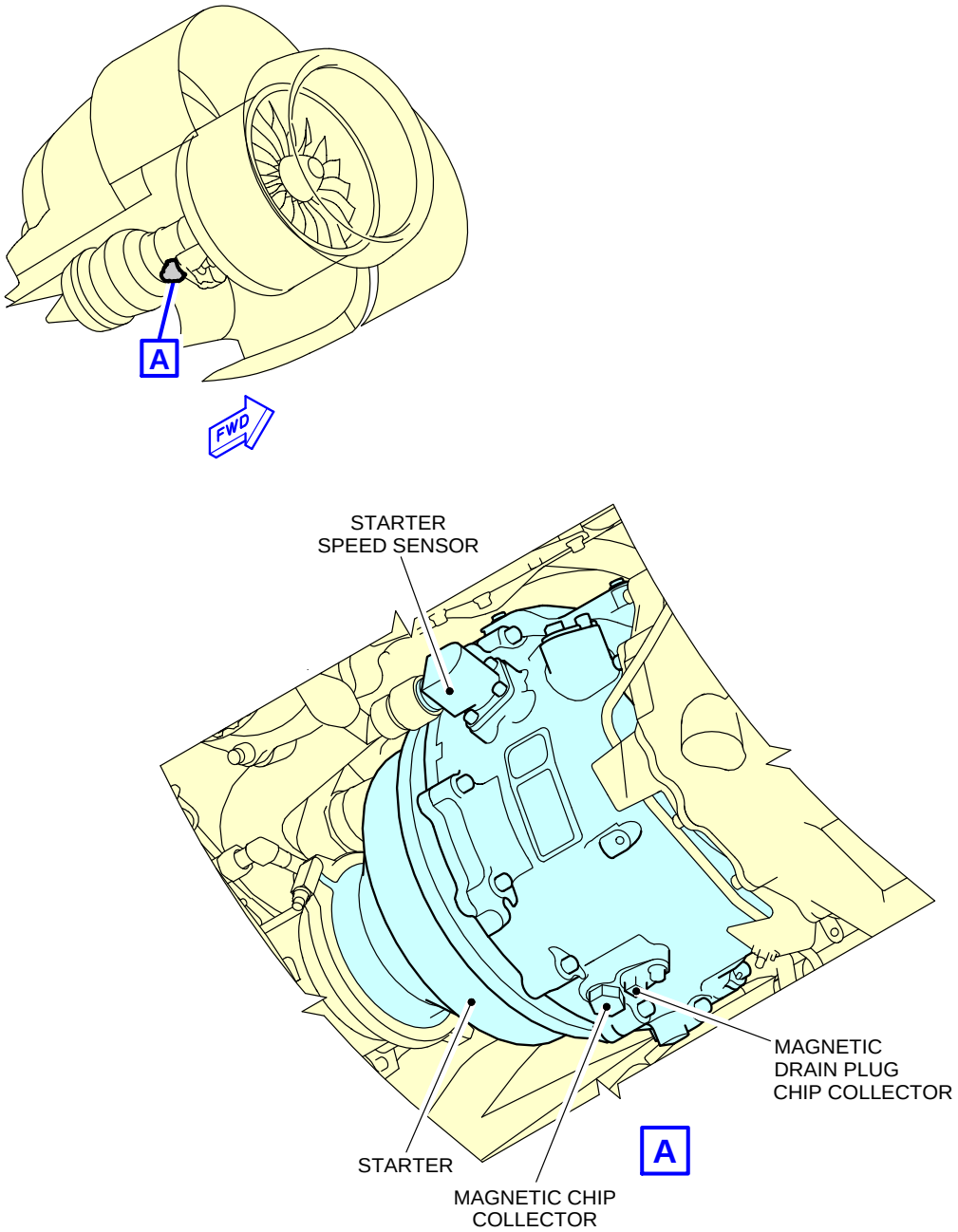

N_AC_050408_1_0150101_01_00

Ground Service Connections
Starter Oil Tank – PW 1100G Series Engine
FIGURE-5-4-8-991-015-A01

5-4-9 Potable Water System

****ON A/C A321-100 A321-200 A321neo A321neo-XLR**

Potable Water System

1. Potable Water Ground Service Panels

ACCESS	DISTANCE			
	AFT OF NOSE	POSITION FROM AIRCRAFT CENTERLINE		MEAN HEIGHT FROM GROUND
		LH SIDE	RH SIDE	
Potable-Water Service Panel: Access Door 171AL	38.2 m (125.33 ft)	0.3 m (0.98 ft)	-	2.6 m (8.53 ft)
Potable-Water Drain Panel: Access Door 133AL	11.8 m (38.71 ft)	0.15 m (0.49 ft)	-	1.75 m (5.74 ft)

NOTE : Distances are approximate.

2. Technical Specifications

A. Connectors:

(1) On the potable-water service panel (Access Door 171AL)
- Fill/Drain Nipple 3/4 in. (ISO 17775).
- One ground air-pressure connector.

(2) On the potable-water drain panel (Access Door 133AL)
- Drain Nipple 3/4 in. (ISO 17775).

B. Usable capacity:
- Standard configuration - one tank: 200 l (53 US gal).
- A321NEO-XLR - one forward tank: 188 l (50 US gal).
- A321NEO-XLR - one aft tank: 200 l (53 US gal).

C. Filling pressure:
- 3.45 bar (50 psi).

D. Typical flow rate:
- 50 l/min (13 US gal/min).

**ON A/C A321-100 A321-200 A321neo

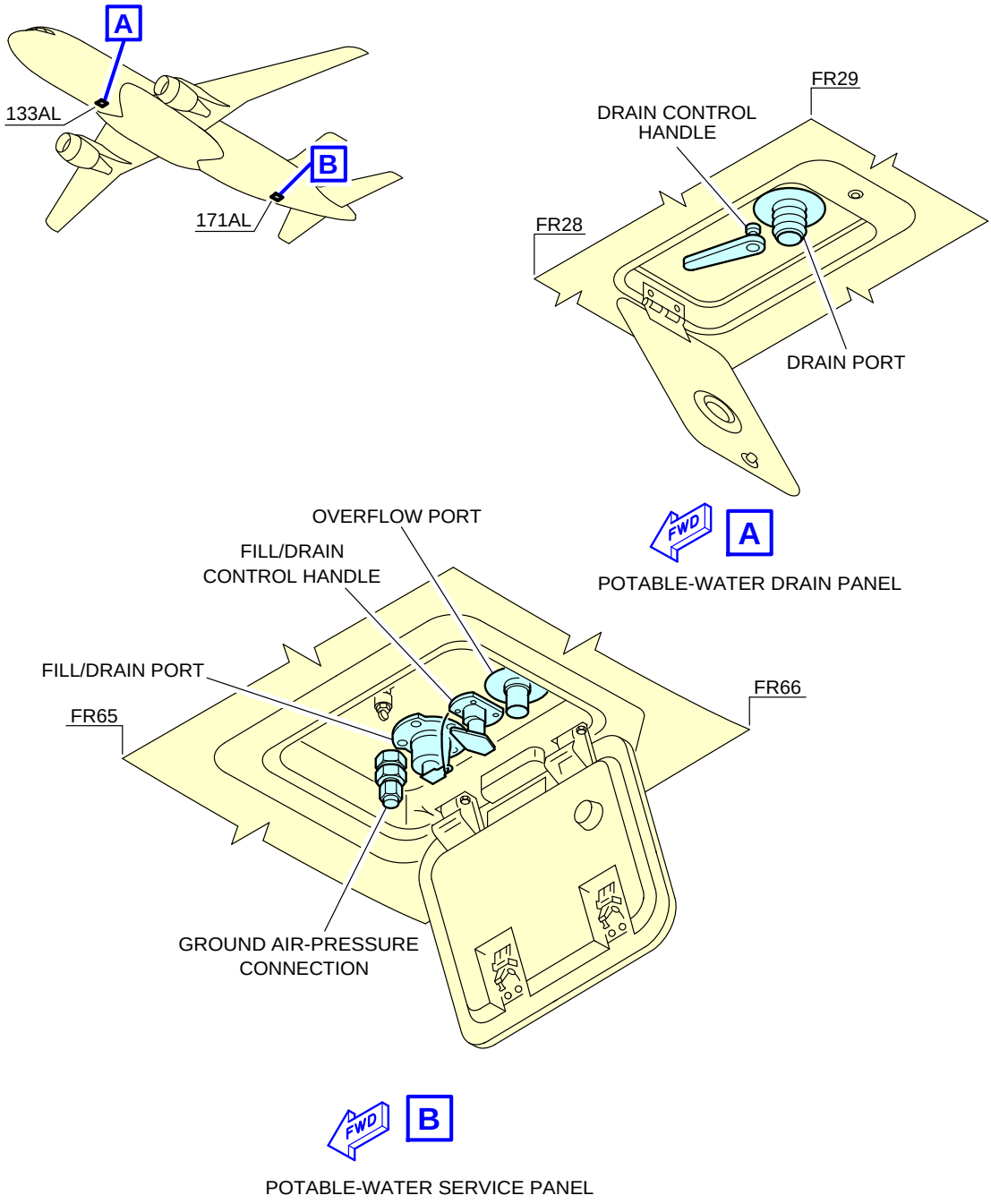

Ground Service Connections
Potable Water Ground Service Panels
FIGURE-5-4-9-991-029-A01

**ON A/C A321-100 A321-200 A321neo

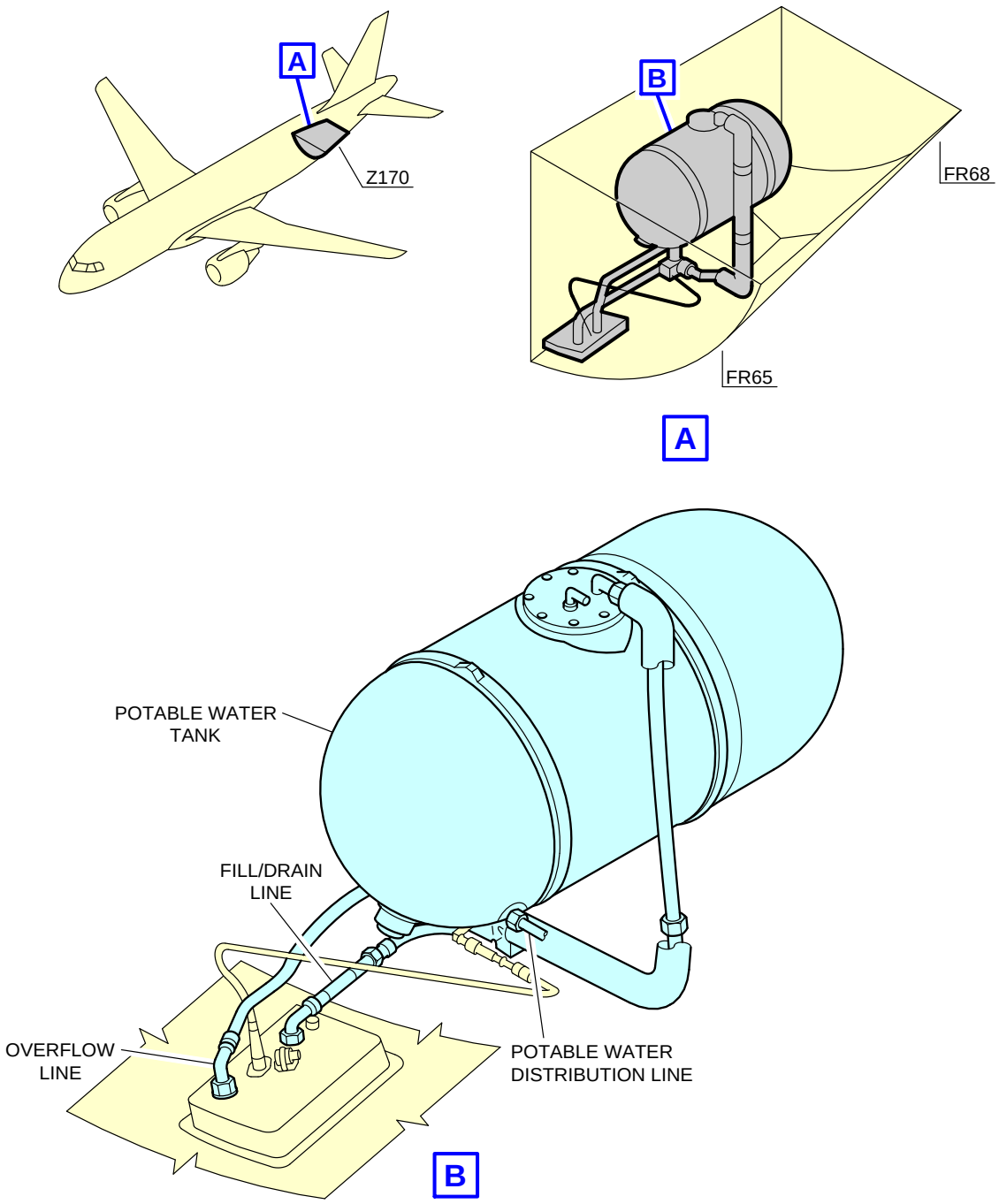

Ground Service Connections
Potable Water Tank Location
FIGURE-5-4-9-991-030-A01

**ON A/C A321neo-XLR

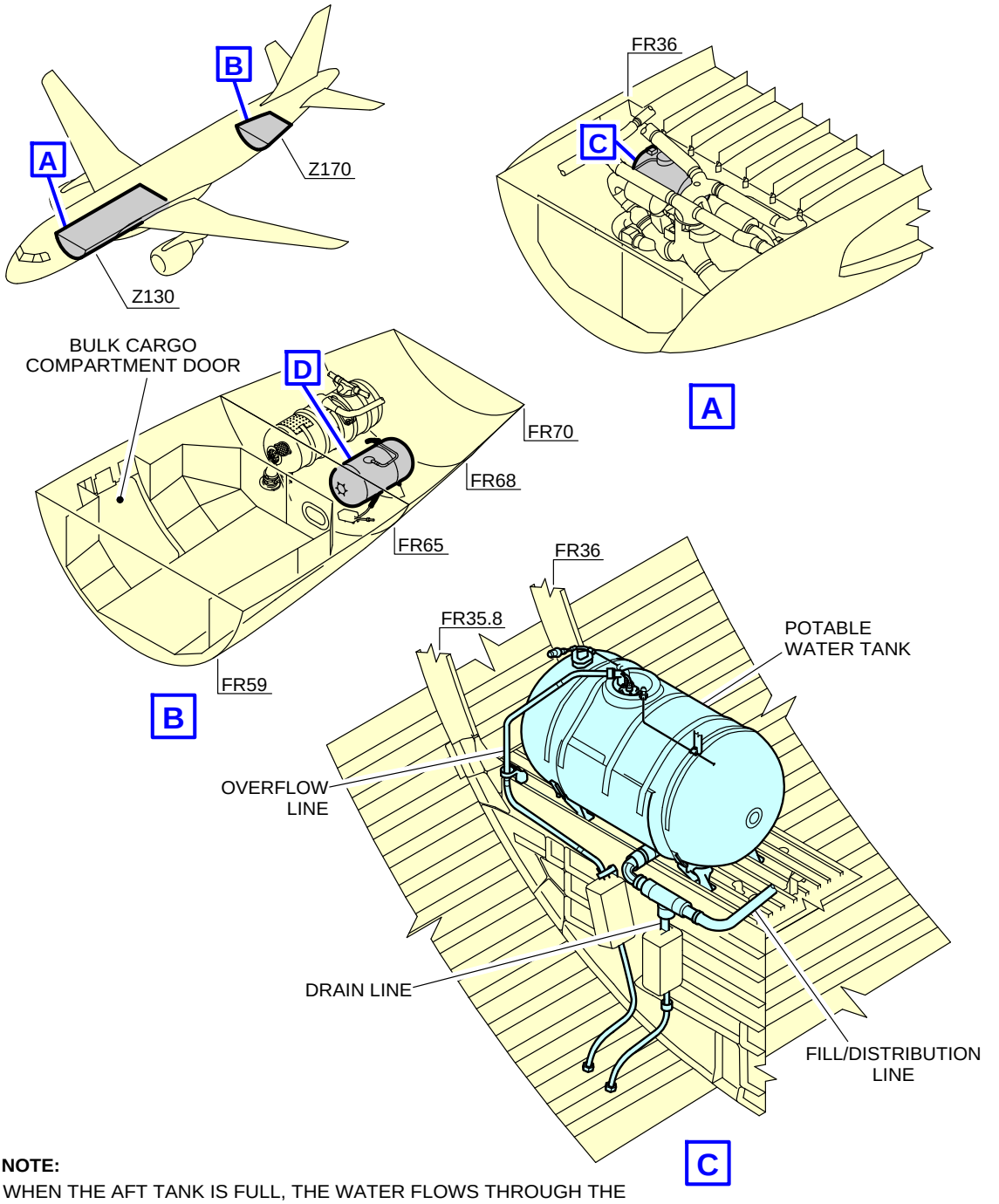

NOTE:
WHEN THE AFT TANK IS FULL, THE WATER FLOWS THROUGH THE CONNECTION LINE TO FILL THE FORWARD TANK.

N_AC_050409_1_0300301_01_00

Ground Service Connections
Potable Water Tank Location1 of 2)
5-4-9-991-030-C01

**ON A/C A321neo-XLR

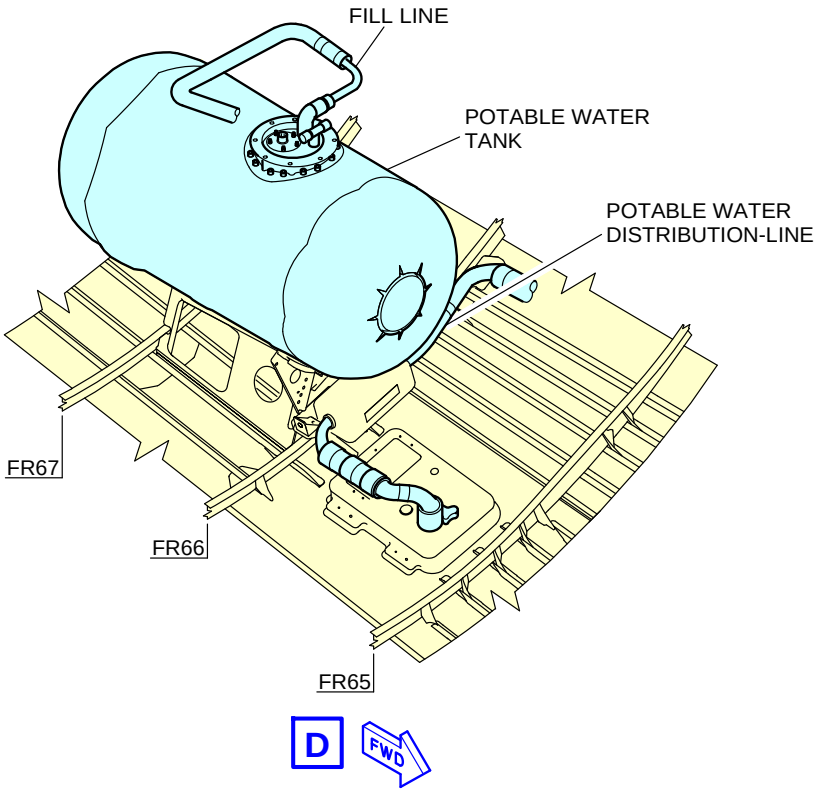

NOTE:

WHEN THE AFT TANK IS FULL, THE WATER FLOWS THROUGH THE CONNECTION LINE TO FILL THE FORWARD TANK.

N_AC_050409_1_0300309_01_00

Ground Service Connections
Potable Water Tank Location2 of 2)
5-4-9-991-030-C01

**ON A/C A321neo-XLR

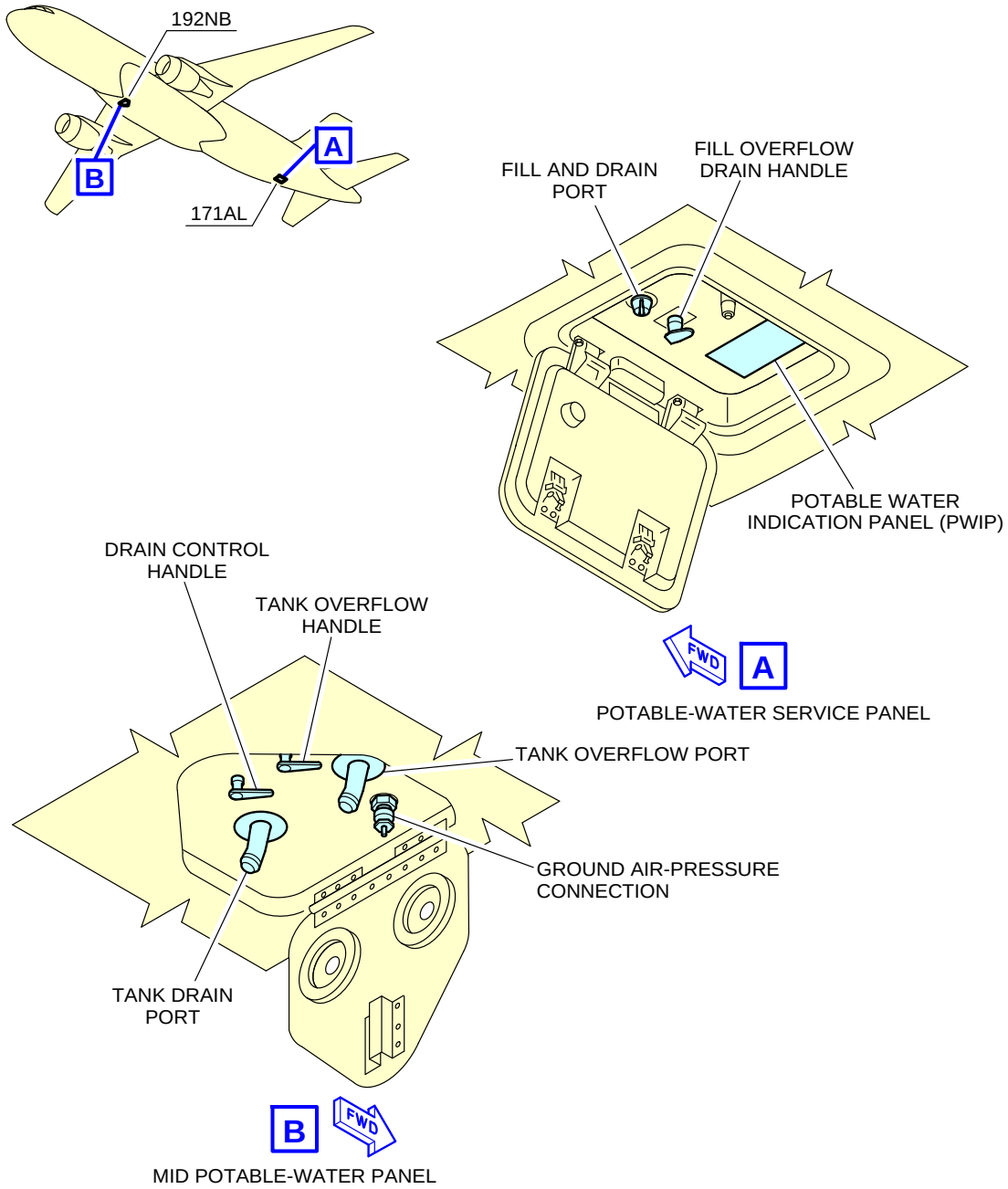

N_AC_050409_1_0310101_01_00

Ground Service Connections
Potable Water Ground Service Panels
5-4-9-991-031-A01

5-4-10 Waste Water System

****ON A/C A321-100 A321-200 A321neo A321neo-XLR**

Waste Water System

1. Waste Water System

ACCESS	DISTANCE			
	AFT OF NOSE	POSITION FROM AIRCRAFT CENTERLINE		MEAN HEIGHT FROM GROUND
		LH SIDE	RH SIDE	
Waste-Water Ground Service Panel: Access door 172AR	38.2 m (125.33 ft)	-	0.8 m (2.62 ft)	2.8 m (9.19 ft)

NOTE : Distances are approximate.

2. Technical Specifications

A. Connectors:
- Draining: 4 in. (ISO 17775).
- Flushing and filling: 1 in. (ISO 17775).

B. Usable waste tank capacity:
- Standard configuration - one tank: 177 l (47 US gal).
- A321NEO-ACF- one tank: 250 l (66 US gal).
- A321NEO-XLR- one tank: 220 l (58 US gal).

NOTE : On A321NEO-XLR, waste tank can have an optional capacity of 300 l (79 US gal).

C. Waste tank - Rinsing:
- Operating pressure: 3.45 bar (50 psi).

D. Waste tank - Precharge:
- 10 l (3 US gal).

**ON A/C A321-100 A321-200 A321neo A321neo-XLR

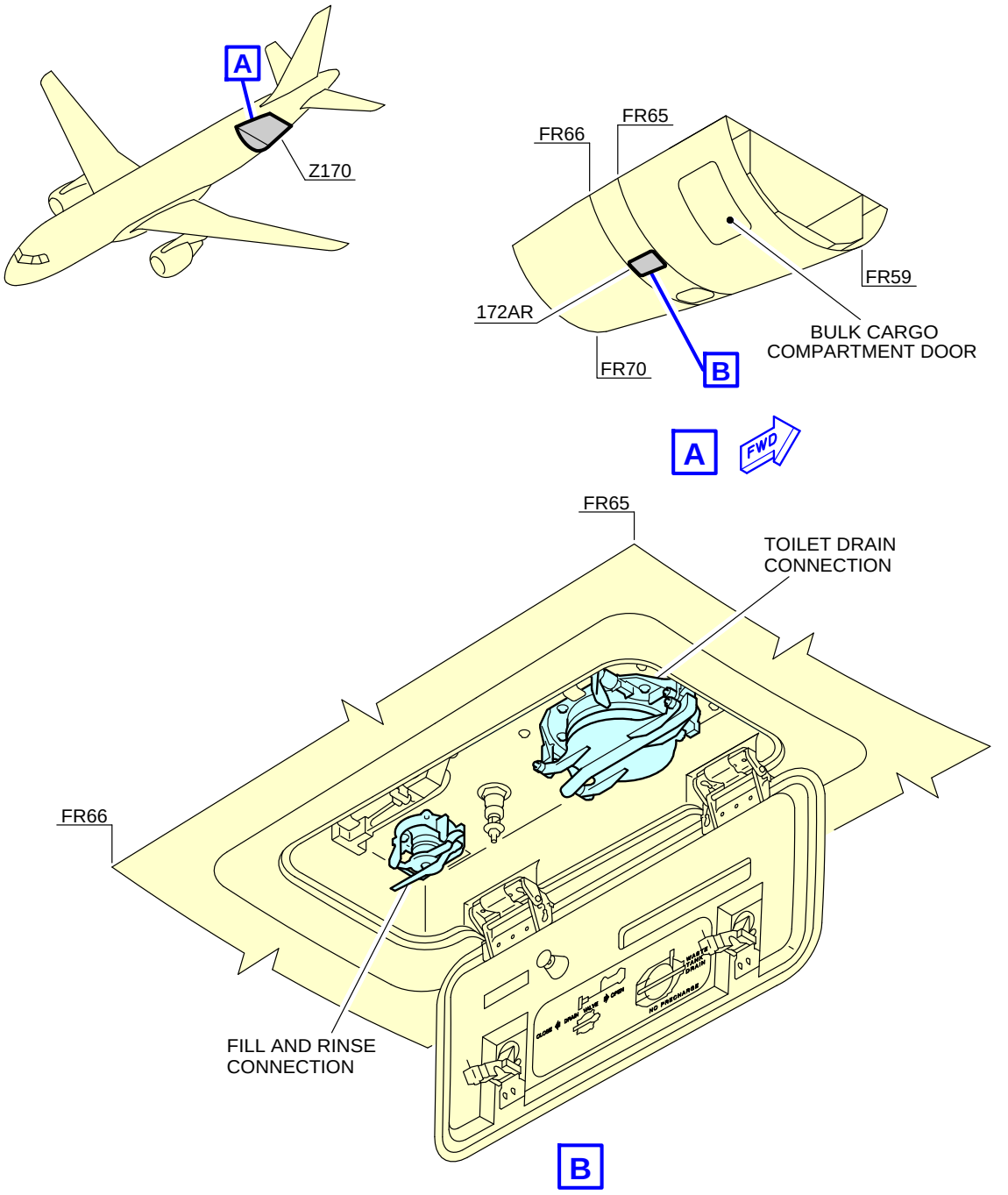

Ground Service Connections
Waste Water Ground Service Panel
FIGURE-5-4-10-991-001-A01

****ON A/C A321-100 A321-200 A321neo**

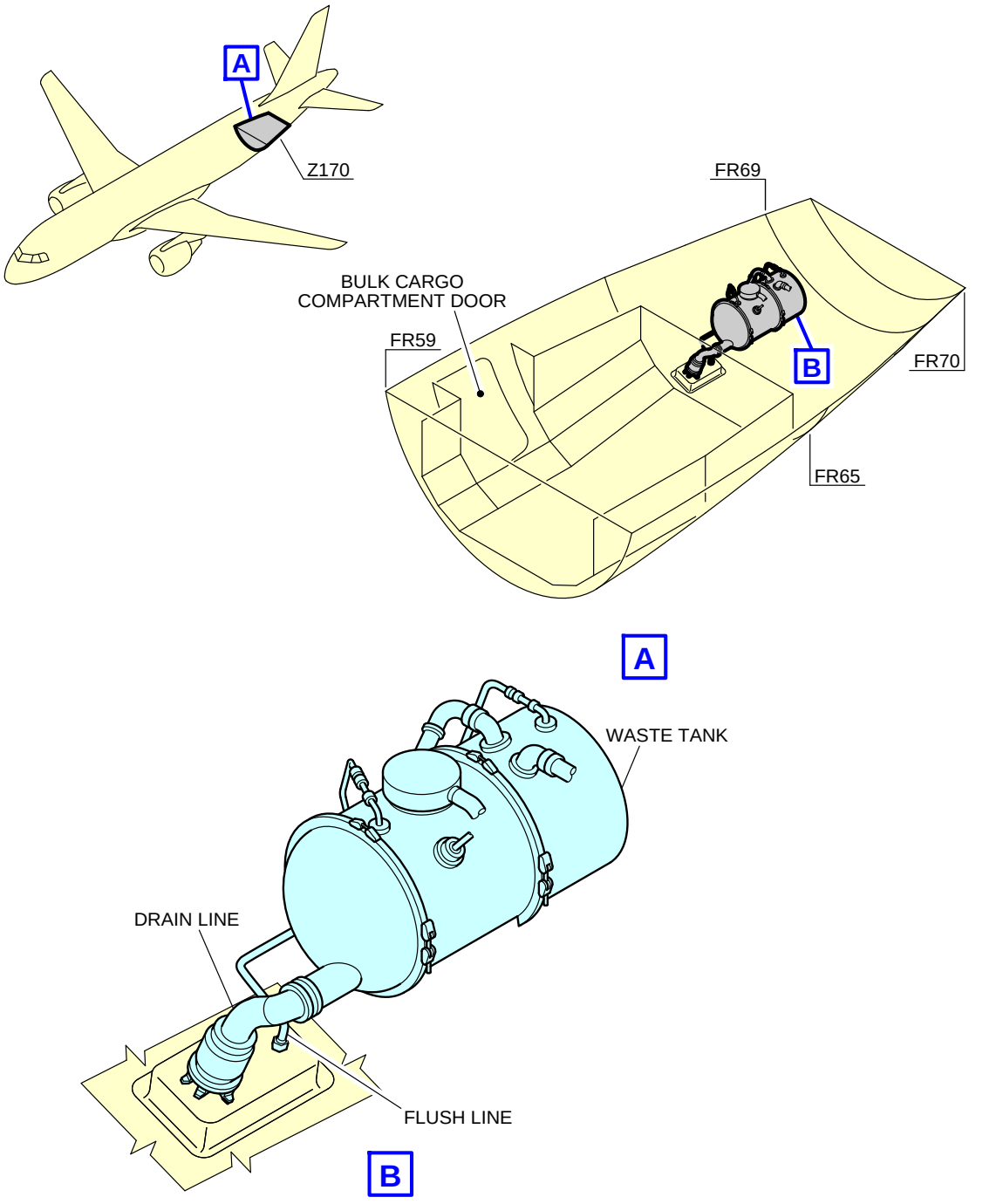

Ground Service Connections
Waste Tank Location
FIGURE-5-4-10-991-004-A01

**ON A/C A321neo-XLR

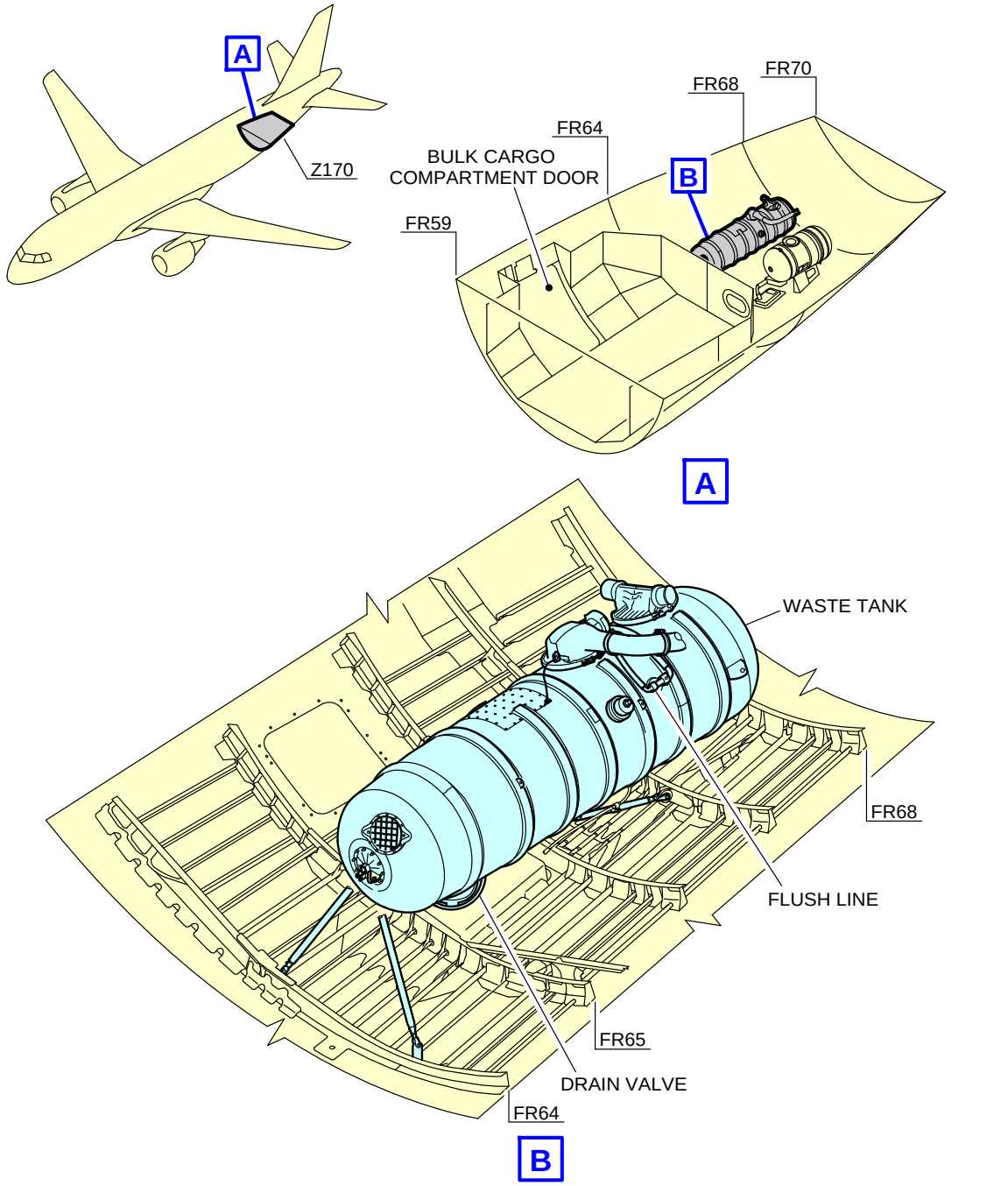

N_AC_050410_1_0070101_01_00

Ground Service Connections
Waste Tank Location
5-4-10-991-007-A01

5-5-0 Engine Starting Pneumatic Requirements

****ON A/C A321-100 A321-200 A321neo A321neo-XLR**

Engine Starting Pneumatic Requirements

1. The function of this section gives the minimum air data requirements at the aircraft.

Abbreviation	Definition
ASU	Air Start Unit
HPGC	High Pressure Ground Connection
OAT	Outside Air Temperature

A. The pressure at HPGC must not be more than 60 psig (75 psia) and less than 33 psig (48 psia). The temperature must be less than 220 °C (428 °F).

B. The recommended pressure at HPGC is 40 psig (55 psia).

C. The OAT and the ASU performances (see the technical data from the ASU manufacturer) effect the ASU output temperature.

D. The tables provide the global requirements for the airflow start for one engine. If necessary, connect two ASUs in parallel which gives the same pressure (one for each HPGC) to supply the necessary airflow to the aircraft.

****ON A/C A321-100 A321-200**

2. CFM56 Series Engines for an OAT between -40 °C (-104 °F) and 55 °C (131 °F) or between -40 °F (-4 °C) and 131 °F (55 °C) at Sea Level

ASU Output Temperature Range	Pressure at HPGC	Mass Flow at HPGC
100 °C (212 °F) to 125 °C (257 °F)	40 psig (55 psia)	186 ppm (84 kg/min)
125 °C (257 °F) to 175 °C (347 °F)	40 psig (55 psia)	180 ppm (82 kg/min)
175 °C (347 °F) to 220 °C (428 °F)	40 psig (55 psia)	169 ppm (77 kg/min)

3. IAE-V2500 Series Engines for an OAT between -40 °C (-104 °F) and 55 °C (131 °F) or between -40 °F (-4 °C) and 131 °F (55 °C) at Sea Level

ASU Output Temperature Range	Pressure at HPGC	Mass Flow at HPGC
100 °C (212 °F) to 125 °C (257 °F)	40 psig (55 psia)	167 ppm (76 kg/min)
125 °C (257 °F) to 175 °C (347 °F)	40 psig (55 psia)	162 ppm (73 kg/min)
175 °C (347 °F) to 220 °C (428 °F)	40 psig (55 psia)	152 ppm (69 kg/min)

****ON A/C A321neo A321neo-XLR**

4. CFM Leap Engines for an OAT between -40 °C (-104 °F) and 55 °C (131 °F) or between -40 °F (-4 °C) and 131 °F (55 °C) at Sea Level

ASU Output Temperature Range	Pressure at HPGC	Mass Flow at HPGC
100 °C (212 °F) to 125 °C (257 °F)	40 psig (55 psia)	196 ppm (89 kg/min)
125 °C (257 °F) to 175 °C (347 °F)	40 psig (55 psia)	189 ppm (86 kg/min)
175 °C (347 °F) to 220 °C (428 °F)	40 psig (55 psia)	179 ppm (81 kg/min)

5. PW1100G Engines for an OAT between -40 °C (-104 °F) and 55 °C (131 °F) or between -40 °F (-4 °C) and 131 °F (55 °C) at Sea Level

ASU Output Temperature Range	Pressure at HPGC	Mass Flow at HPGC
100 °C (212 °F) to 125 °C (257 °F)	40 psig (55 psia)	194 ppm (88 kg/min)
125 °C (257 °F) to 175 °C (347 °F)	40 psig (55 psia)	188 ppm (85 kg/min)
175 °C (347 °F) to 220 °C (428 °F)	40 psig (55 psia)	177 ppm (80 kg/min)

5-6-0 Ground Pneumatic Power Requirements

****ON A/C A321-100 A321-200 A321neo A321neo-XLR**

Ground Pneumatic Power Requirements

1. General

This section describes the required performance for the ground equipment to maintain the cabin temperature at 27 °C (80.6 °F) for the cooling or 21 °C (69.8 °F) for heating cases after boarding (Section 5.7 - steady state), and provides the time needed to cool down or heat up the aircraft cabin to the required temperature (Section 5.6 - dynamic cases with aircraft empty).

ABBREVIATION	DEFINITION
A/C	Aircraft
AHM	Aircraft Handling Manual
AMM	Aircraft Maintenance Manual
GC	Ground Connection
GSE	Ground Service Equipment
IFE	In-Flight Entertainment
OAT	Outside Air Temperature
PCA	Pre-Conditioned Air

A. The air flow rates and temperature requirements for the GSE, provided in Sections 5.6 and 5.7, are given at A/C ground connection.

NOTE : The cooling capacity of the equipment (kW) is only indicative and is not sufficient by itself to ensure the performance (outlet temperature and flow rate combinations are the requirements needed for ground power). An example of cooling capacity calculation is given in Section 5.7.

NOTE : The maximum air flow is driven by pressure limitation at the ground connection.

B. For temperatures at ground connection below 2 °C (35.6 °F) (Subfreezing), the ground equipment shall be compliant with the Airbus document ”Subfreezing PCA Carts - Compliance Document for Suppliers” (contact Airbus to obtain this document) defining all the requirements with which Subfreezing Pre-Conditioning Air equipment must comply to allow its use on Airbus aircraft. These requirements are in addition to the functional specifications included in the IATA AHM997.

2. Ground Pneumatic Power Requirements

This section provides the ground pneumatic power requirements for:

- Heating (pull up) the cabin, initially at OAT, up to 21 °C (69.8 °F) (see FIGURE 5-6-0-991-001-A)
- Cooling (pull down) the cabin, initially at OAT, down to 27 °C (80.6 °F) (see FIGURE 5-6-0-991-002-A).

**ON A/C A321-100 A321-200 A321neo A321neo-XLR

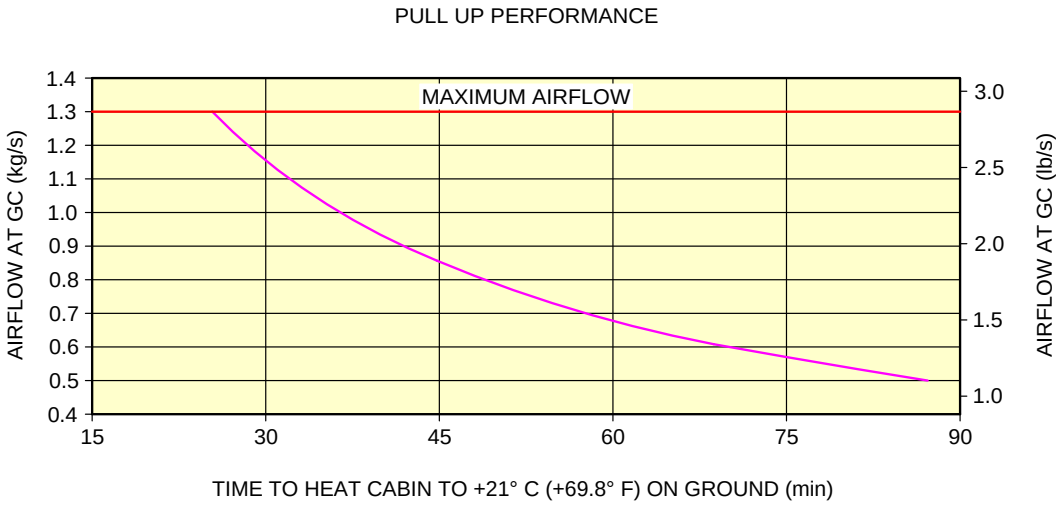

N_AC_050600_1_0010101_01_00

Ground Pneumatic Power Requirements
Heating
FIGURE-5-6-0-991-001-A01

**ON A/C A321-100 A321-200 A321neo A321neo-XLR

PULL DOWN PERFORMANCE

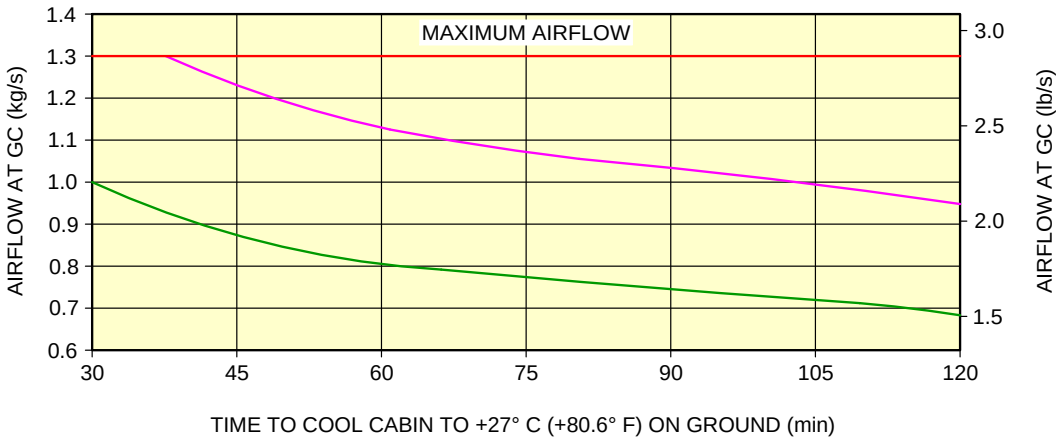

OAT ISA +23° C (+73.4° F); GC INLET +2° C (+35.6° F); EMPTY CABIN; IFE OFF; NO SOLAR LOAD; LIGHTS ON; GALLEYS OFF; RECIRCULATION FANS ON

OAT ISA +23° C (+73.4° F); GC INLET -10° C (+14° F); EMPTY CABIN; IFE OFF; NO SOLAR LOAD; LIGHTS ON; GALLEYS OFF; RECIRCULATION FANS ON

N_AC_050600_1_0020101_01_00

Ground Pneumatic Power Requirements
Cooling
FIGURE-5-6-0-991-002-A01

5-7-0 Preconditioned Airflow Requirements

****ON A/C A321-100 A321-200 A321neo A321neo-XLR**

Preconditioned Airflow Requirements

1. This section provides the preconditioned airflow rate and temperature needed to maintain the cabin temperature at 27 °C (80.6 °F) for the cooling or 21 °C (69.8 °F) for the heating cases.

   These settings are not intended to be used for operation (they are not a substitute for the settings given in the AMM). They are based on theoretical simulations and give the picture of a real steady state.
   The purpose of the air conditioning (cooling) operation (described in the AMM) is to maintain the cabin temperature below 27 °C (80.6 °F) during boarding (therefore it is not a steady state).

**ON A/C A321-100 A321-200 A321neo A321neo-XLR

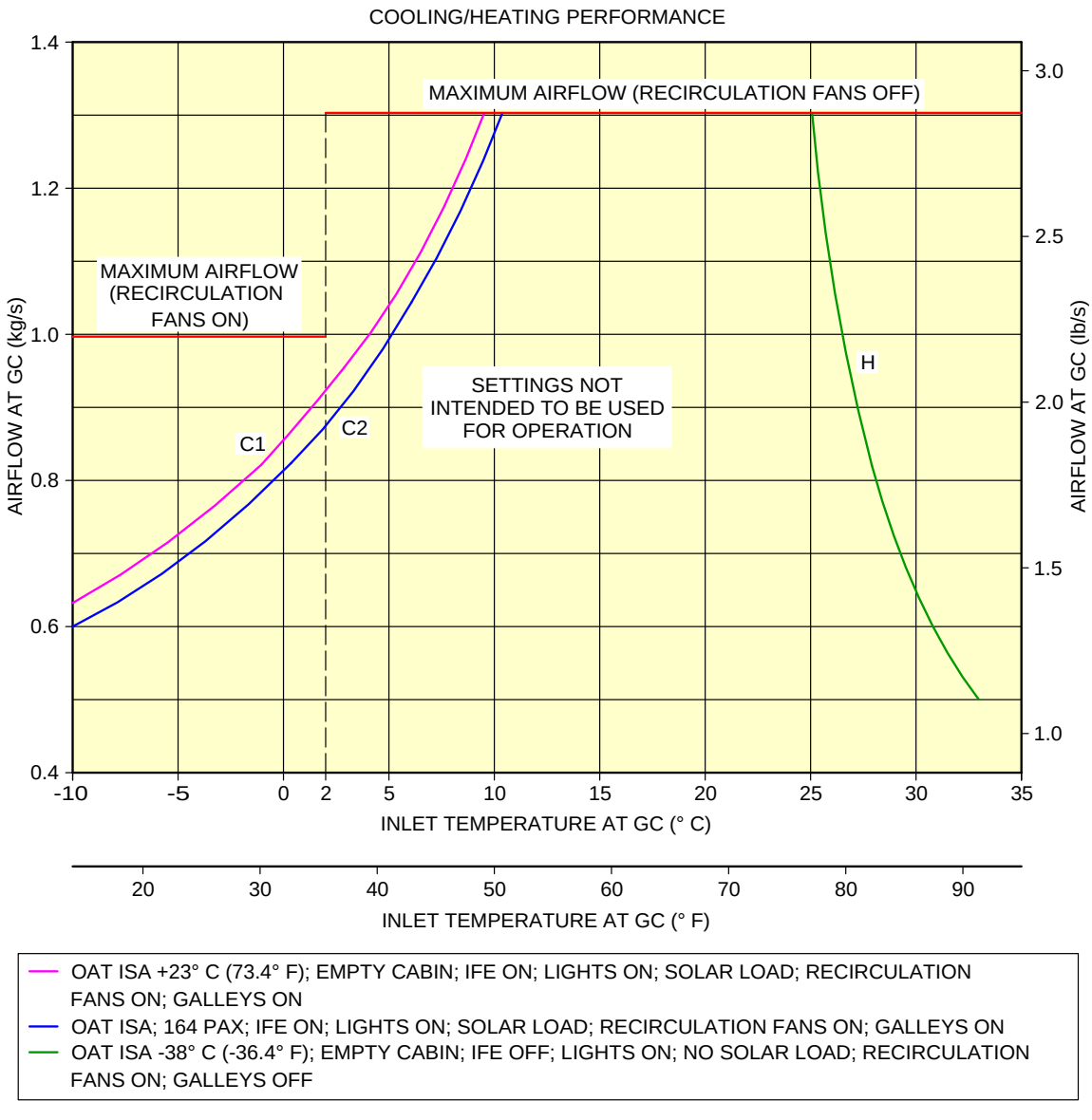

N_AC_050700_1_0030101_01_04

Preconditioned Airflow Requirements
FIGURE-5-7-0-991-003-A01

5-8-0 Ground Towing Requirements

****ON A/C A321-100 A321-200 A321neo A321neo-XLR**

Ground Towing Requirements

1. This section gives information on aircraft towing.

   This aircraft is designed with means for standard or towbarless towing. Information/procedures can be found for both in AMM 09.
   Status on towbarless towing equipment qualification can be found in ISI 09.11.00001.

   NOTE : The NLG steering deactivation pin has the same design for all Airbus programs.

   One towbar fitting is installed at the front of the leg.
   The main landing gears have attachment points for towing or debogging (for details, refer ARM 07).

   This section shows the chart to determine the drawbar pull and tow tractor mass requirements as a function of the following physical characteristics:
   - Aircraft weight,
   - Number of engines at idle,
   - Slope.

   The chart is based on the engine type with the highest idle thrust level.

2. Towbar design guidelines

   The aircraft towbar shall comply with the following standards:
   - ISO 8267-1, ”Aircraft - Towbar Attachment Fitting - Interface Requirements - Part 1: Main Line Aircraft",
   - SAE AS 1614, ”Main Line Aircraft Towbar Attach Fitting Interface",
   - SAE ARP 1915, ”Aircraft Towbar",
   - ISO 9667, ”Aircraft Ground Support Equipment - Towbar - Connection to Aircraft and Tractor",
   - EN 12312-7, ”Aircraft Ground Support Equipment - Specific Requirements - Part 7: Aircraft Movement Equipment",
   - IATA Airport Handling Manual AHM 958, ”Functional Specification for an Aircraft Towbar".

   A standard type towbar is required which should be equipped with a damping system (to protect the nose gear against jerks), a rotating toweye and with towing shear pins:
   - A traction shear pin calibrated at 9 425 daN (21 188 lbf),
   - A torsion pi n calibrated at 826 m.daN (6 092 lbf.ft).

The towing head is designed according to ISO 8267-1, cat. I.

****ON A/C A321-100 A321-200**

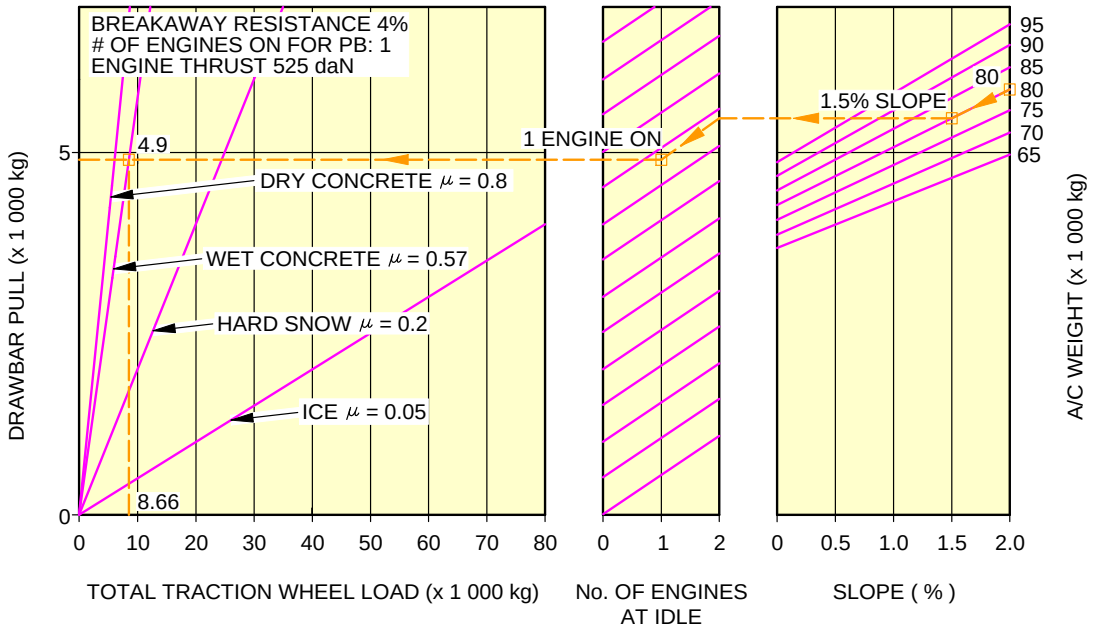

EXAMPLE HOW TO DETERMINE THE TRACTION WHEEL LOAD REQUIREMENT TO TOW A A321 AT 80 000 kg, AT 1.5% SLOPE, 1 ENGINE AT IDLE AND FOR WET TARMAC CONDITIONS:

- ON THE RIGHT HAND SIDE OF THE GRAPH, CHOOSE THE RELEVANT AIRCRAFT WEIGHT (80 000 kg),
- FROM THIS POINT DRAW A PARALLEL LINE TO THE REQUIRED SLOPE PERCENTAGE (1.5%),
- FROM THE POINT OBTAINED DRAW A STRAIGHT HORIZONTAL LINE UNTIL No. OF ENGINES AT IDLE = 2,
- FROM THIS POINT DRAW A PARALLEL LINE TO THE REQUESTED No. OF ENGINES (1),
- FROM THIS POINT DRAW A STRAIGHT HORIZONTAL LINE TO THE DRAWBAR PULL AXIS,
- THE Y-COORDINATE OBTAINED IS THE NECESSARY DRAWBAR PULL FOR THE TRACTOR (4 900 kg),
- SEARCH THE INTERSECTION WITH THE "WET CONCRETE" LINE.
  THE OBTAINED X-COORDINATE IS THE TOTAL TRACTION WHEEL LOAD (8 660 kg).

NOTE:

USE A TRACTOR WITH A LIMITED DRAWBAR PULL TO PREVENT LOADS ABOVE THE TOW-BAR SHEAR-PIN CAPACITY.
FOR ALL WHEEL-DRIVEN VEHICLES, THE TOTAL TRACTION WHEEL LOAD IS THE TRACTOR WEIGHT.

N_AC_050800_1_0010401_01_07

Ground Towing Requirements
FIGURE-5-8-0-991-001-D01

**ON A/C A321neo A321neo-XLR

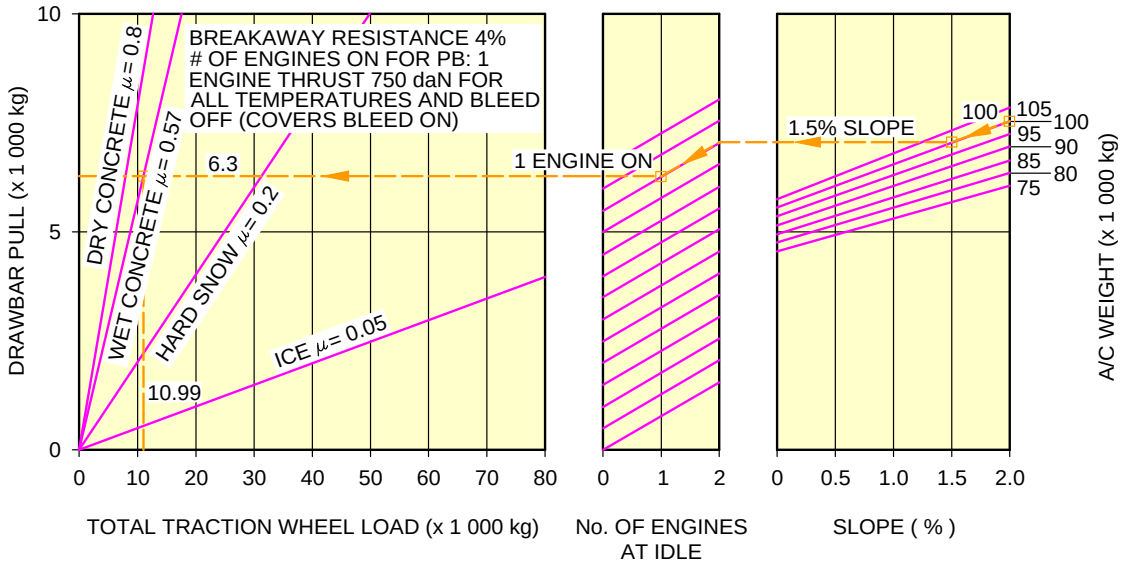

EXAMPLE HOW TO DETERMINE THE TRACTION WHEEL LOAD REQUIREMENT TO TOW A A321 AT 100 000 kg, AT 1.5% SLOPE, 1 ENGINE AT IDLE AND FOR WET TARMAC CONDITIONS:

- ON THE RIGHT HAND SIDE OF THE GRAPH, CHOOSE THE RELEVANT AIRCRAFT WEIGHT (100 000 kg),
- FROM THIS POINT DRAW A PARALLEL LINE TO THE REQUIRED SLOPE PERCENTAGE (1.5%),
- FROM THE POINT OBTAINED DRAW A STRAIGHT HORIZONTAL LINE UNTIL No. OF ENGINES AT IDLE = 2,
- FROM THIS POINT DRAW A PARALLEL LINE TO THE REQUESTED No. OF ENGINES (1),
- FROM THIS POINT DRAW A STRAIGHT HORIZONTAL LINE TO THE DRAWBAR PULL AXIS,
- THE Y-COORDINATE OBTAINED IS THE NECESSARY DRAWBAR PULL FOR THE TRACTOR (6 300 kg),
- SEARCH THE INTERSECTION WITH THE "WET CONCRETE" LINE.
  THE OBTAINED X-COORDINATE IS THE TOTAL TRACTION WHEEL LOAD (10 990 kg).

NOTE:

USE A TRACTOR WITH A LIMITED DRAWBAR PULL TO PREVENT LOADS ABOVE THE TOW-BAR SHEAR-PIN CAPACITY.
FOR ALL WHEEL-DRIVEN VEHICLES, THE TOTAL TRACTION WHEEL LOAD IS THE TRACTOR WEIGHT.

N_AC_050800_1_0011201_01_00

Ground Towing Requirements
PW 1100G Engine (Sheet 1 of 2)
FIGURE-5-8-0-991-001-M01

**ON A/C A321neo A321neo-XLR

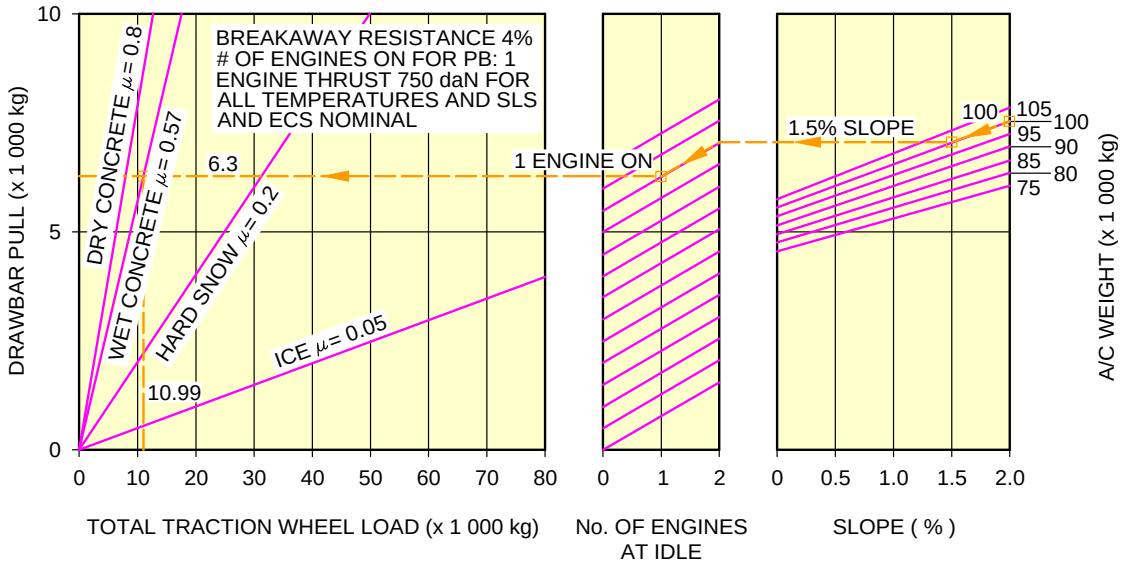

EXAMPLE HOW TO DETERMINE THE TRACTION WHEEL LOAD REQUIREMENT TO TOW A A321 AT 100 000 kg, AT 1.5% SLOPE, 1 ENGINE AT IDLE AND FOR WET TARMAC CONDITIONS:

- ON THE RIGHT HAND SIDE OF THE GRAPH, CHOOSE THE RELEVANT AIRCRAFT WEIGHT (100 000 kg),
- FROM THIS POINT DRAW A PARALLEL LINE TO THE REQUIRED SLOPE PERCENTAGE (1.5%),
- FROM THE POINT OBTAINED DRAW A STRAIGHT HORIZONTAL LINE UNTIL No. OF ENGINES AT IDLE = 2,
- FROM THIS POINT DRAW A PARALLEL LINE TO THE REQUESTED No. OF ENGINES (1),
- FROM THIS POINT DRAW A STRAIGHT HORIZONTAL LINE TO THE DRAWBAR PULL AXIS,
- THE Y-COORDINATE OBTAINED IS THE NECESSARY DRAWBAR PULL FOR THE TRACTOR (6 300 kg),
- SEARCH THE INTERSECTION WITH THE "WET CONCRETE" LINE.
  THE OBTAINED X-COORDINATE IS THE TOTAL TRACTION WHEEL LOAD (10 990 kg).

NOTE:

USE A TRACTOR WITH A LIMITED DRAWBAR PULL TO PREVENT LOADS ABOVE THE TOW-BAR SHEAR-PIN CAPACITY.
FOR ALL WHEEL-DRIVEN VEHICLES, THE TOTAL TRACTION WHEEL LOAD IS THE TRACTOR WEIGHT.

N_AC_050800_1_0011202_01_00

Ground Towing Requirements
CFM LEAP-1A Engine (Sheet 2 of 2)
FIGURE-5-8-0-991-001-M01

5-9-0 De-Icing and External Cleaning

****ON A/C A321-100 A321-200 A321neo A321neo-XLR**

De-Icing and External Cleaning

1. De-Icing and External Cleaning on Ground

   The mobile equipment for aircraft de-icing and external cleaning must be capable of reaching heights up to approximately 13 m (43 ft).

2. De-Icing

AIRCRAFT TYPE	Wing Top Surface (Both Sides)		Wingtip Devices (Both Inside and Outside Surfaces) (Both Sides)		HTP Top Surface (Both Sides)		VTP (Both Sides)	
	m²	ft²	m²	ft²	m²	ft²	m²	ft²
A321	103	1 109	2	22	27	291	43	463
A321 Sharklet/neo	103	1 109	10	108	27	291	43	463

AIRCRAFT TYPE	Fuselage Top Surface (Top Third - 120° Arc)		Nacelle and Pylon (Top Third - 120° Arc) (All Engines)		Total De-Iced Area	
	m²	ft²	m²	ft²	m²	ft²
A321	167	1 798	24	258	365	3 929
A321 Sharklet/neo	167	1 798	24	258	373	4 015

NOTE : Dimensions are approximate.

3. External Cleaning

AIRCRAFT TYPE	Wing Top Surface (Both Sides)		Wing Lower Surface (Including Flap Track Fairing) (Both Sides)		Wingtip Devices (Both Inside and Outside Surfaces) (Both Sides)	
	m²	ft²	m²	ft²	m²	ft²
A321	103	1 109	109	1 173	2	22

AIRCRAFT TYPE	Wing Top Surface (Both Sides)		Wing Lower Surface (Including Flap Track Fairing) (Both Sides)		Wingtip Devices (Both Inside and Outside Surfaces) (Both Sides)	
	m^2	ft^2	m^2	ft^2	m^2	ft^2
A321 Sharklet/neo	103	1 109	109	1 173	10	108

AIRCRAFT TYPE	HTP Top Surface (Both Sides)		HTP Lower Surface (Both Sides)		VTP (Both Sides)	
	m^2	ft^2	m^2	ft^2	m^2	ft^2
A321	27	291	27	291	43	463
A321 Sharklet/neo	27	291	27	291	43	463

AIRCRAFT TYPE	Fuselage and Belly Fairing		Nacelle and Pylon (All Engines)		Total Cleaned Area	
	m^2	ft^2	m^2	ft^2	m^2	ft^2
A321	510	5 490	73	786	895	9 634
A321 Sharklet/neo	510	5 490	73	786	902	9 709

NOTE : Dimensions are approximate.

OPERATING CONDITIONS

6-1-0 Engine Exhaust Velocities and Temperatures

****ON A/C A321-100 A321-200 A321neo A321neo-XLR**

Engine Exhaust Velocities and Temperatures

****ON A/C A321-100 A321-200**

1. General

   This section provides the estimated engine exhaust efflux velocities and temperatures contours for Ground Idle, Breakaway and Maximum Take-Off (MTO) conditions.

****ON A/C A321neo A321neo-XLR**

2. General

   This section provides the estimated engine exhaust velocity and temperature contours for MTO, Breakaway 12% MTO, Breakaway 24% MTO and Ground Idle conditions for the CFM LEAP-1A and PW 1100G engines.

   The MTO data are presented at the maximum thrust rating. The Breakaway data are presented at a rating that corresponds to the minimum thrust level necessary to start the movement of the A/C from a static position at its maximum ramp weight. Breakaway thrust corresponds to 12% MTO if applied on both engines and 24% MTO when applied on a single engine (Idle thrust on the other engine).

   The Idle data, provided by the engine manufacturer, are calculated for operational conditions ISA +15K (+15°C), Sea Level, Static and no headwind. In the charts, the longitudinal distances are measured from the inboard engine core-nozzle exit section. The lateral distances are measured from the aircraft fuselage centerline.

   The effects of on-wing installation are not taken into account. The effects of ground proximity are not taken into account for PW 1100G engines, but they are taken into account for the CFM LEAP-1A engines.

   The velocity contours are presented at 50 ft/s (15 m/s), 100 ft/s (30 m/s) and 150 ft/s (46 m/s).

The temperature contours are shown at 313K (+40°C), 323K (+50°C) and 333K (+60°C). The velocity and temperature contours do not take into account possible variations affecting performance, such as ambient temperature, field elevation or failure cases leading to an abnormal bleed configuration. To evaluate the impact of these specific variables on the exhaust contours, a specific study of the airport where the aircraft is intended to operate should be carried out.

6-1-1 Engine Exhaust Velocities Contours - Ground Idle Power

****ON A/C A321-100 A321-200 A321neo A321neo-XLR**

Engine Exhaust Velocities Contours - Ground Idle Power

1. This section provides engine exhaust velocities contours at ground idle power.

****ON A/C A321-100 A321-200**

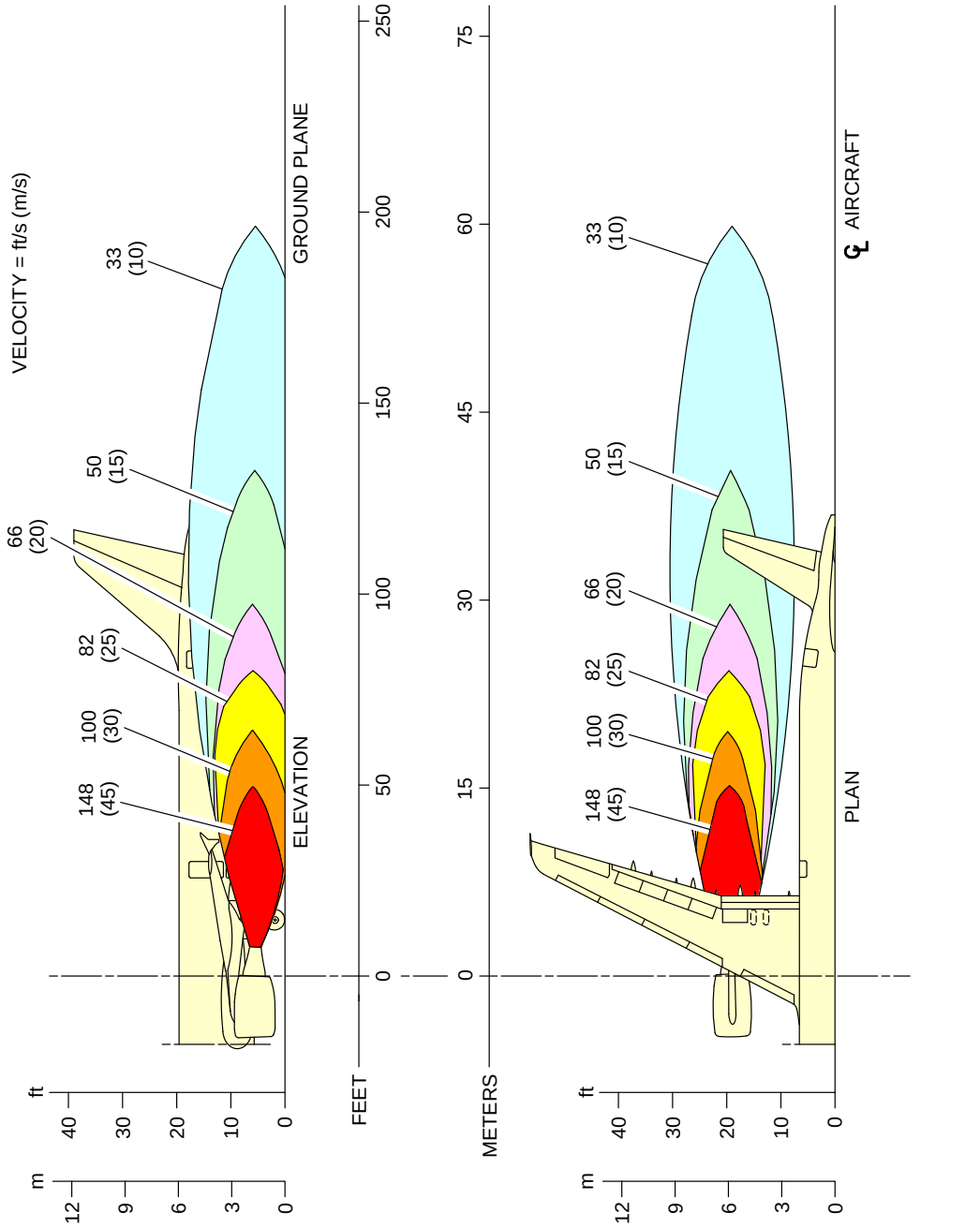

N_AC_060101_1_0070101_01_02

Engine Exhaust Velocities
Ground Idle Power – CFM56-5B Series Engine
FIGURE-6-1-1-991-007-A01

****ON A/C A321-100 A321-200**

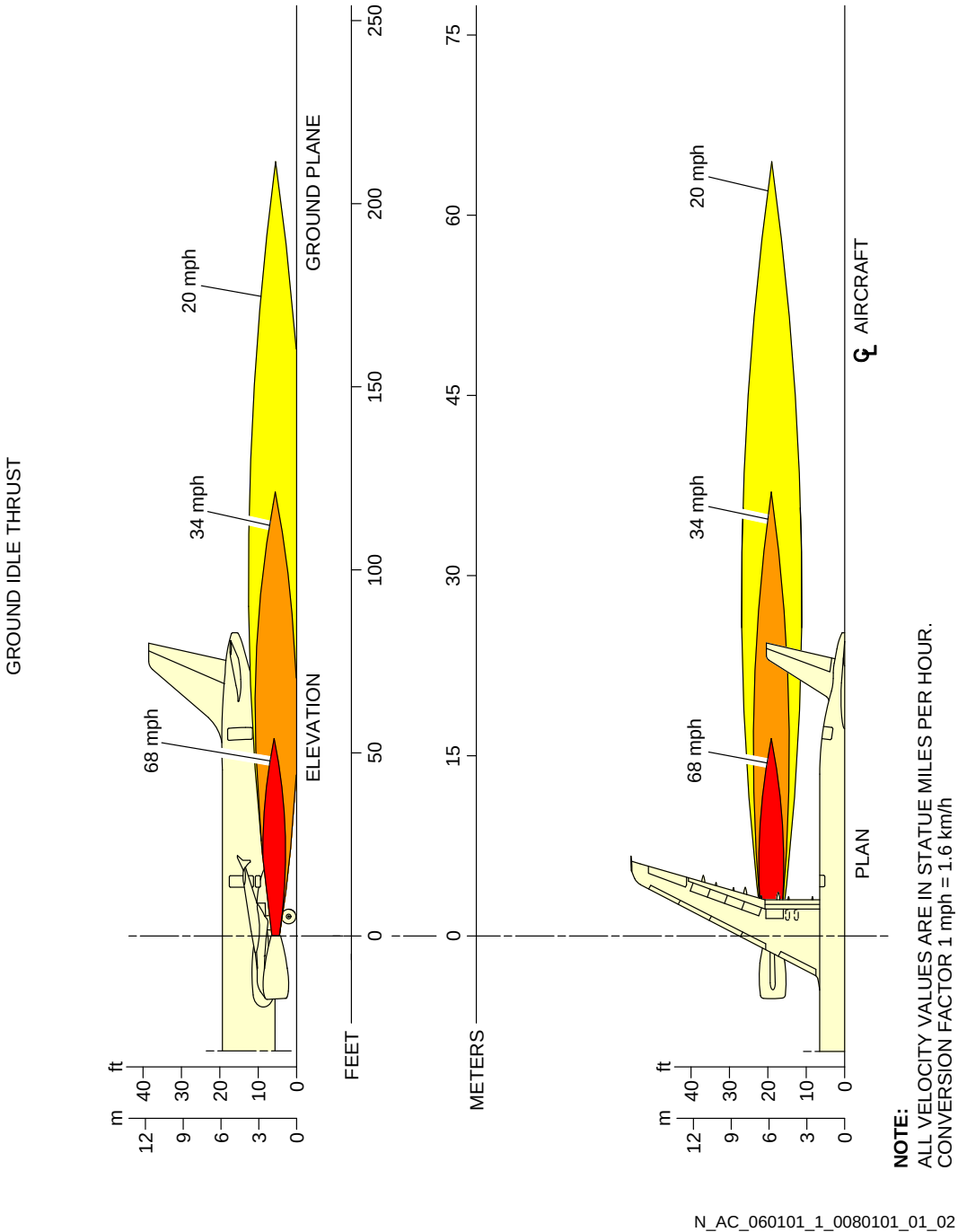

Engine Exhaust Velocities
Ground Idle Power – IAE V2500 Series Engine
FIGURE-6-1-1-991-008-A01

**ON A/C A321neo A321neo-XLR

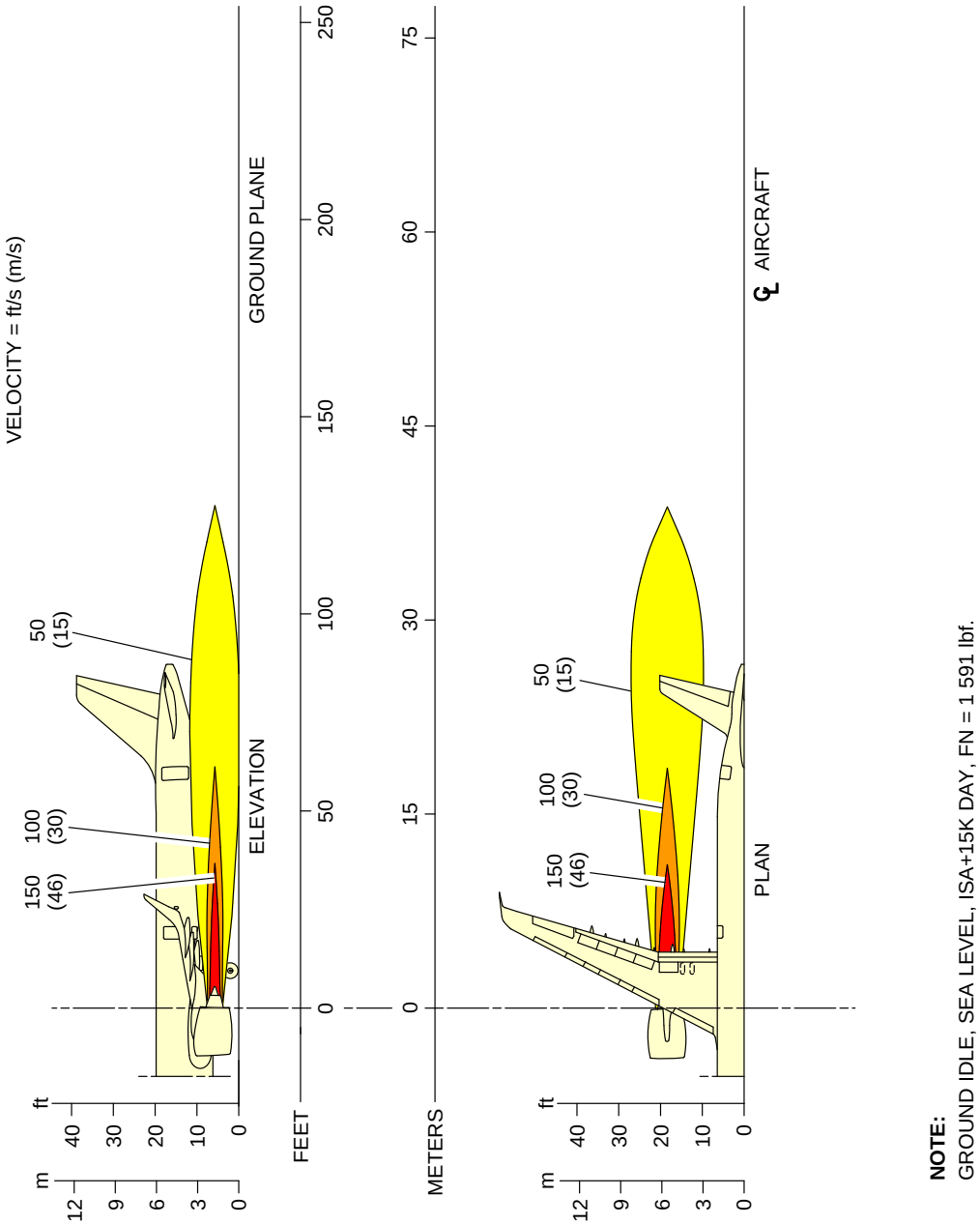

N_AC_060101_1_0130101_01_01

Engine Exhaust Velocities
Ground Idle Power – CFM LEAP-1A Engine
FIGURE-6-1-1-991-013-A01

**ON A/C A321neo A321neo-XLR

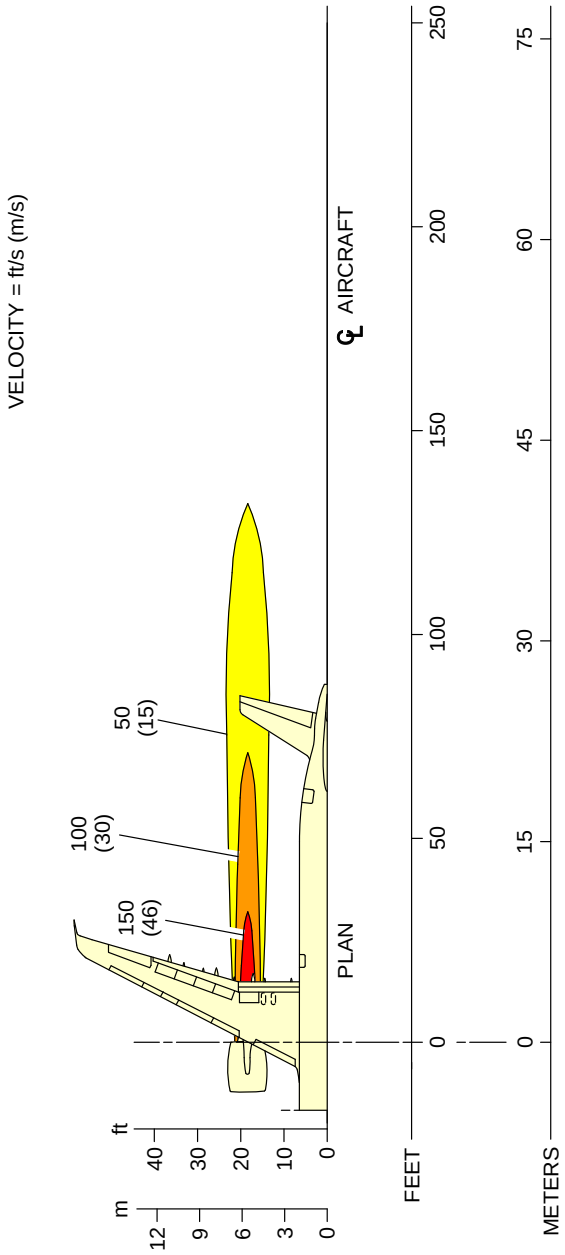

N_AC_060101_1_0140101_01_01

Engine Exhaust Velocities
Ground Idle Power – PW 1100G Engine
FIGURE-6-1-1-991-014-A01

6-1-2 Engine Exhaust Temperatures Contours - Ground Idle Power

****ON A/C A321-100 A321-200 A321neo A321neo-XLR**

Engine Exhaust Temperatures Contours - Ground Idle Power

1. This section provides engine exhaust temperatures contours at ground idle power.

****ON A/C A321-100 A321-200**

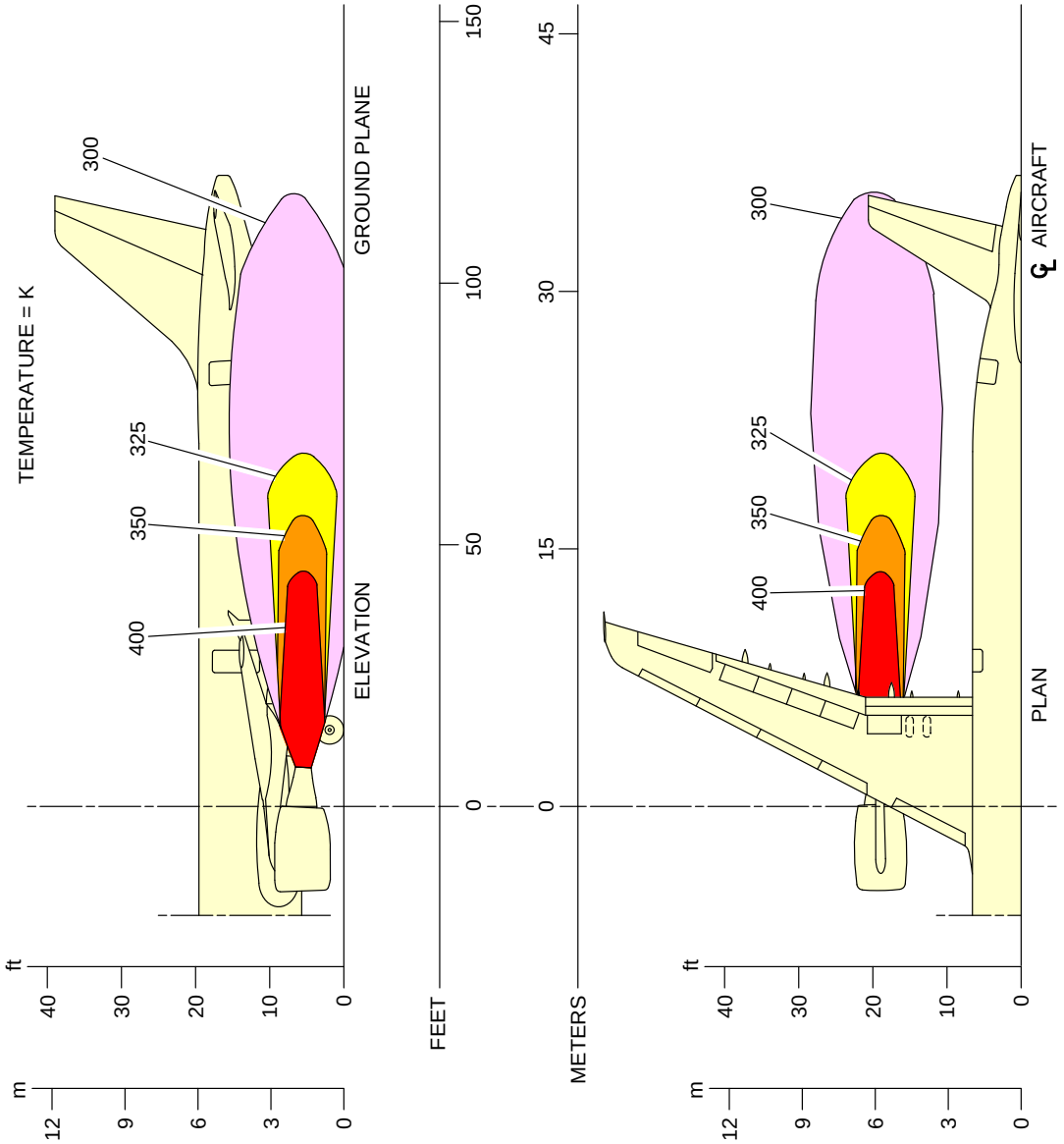

N_AC_060102_1_0070101_01_02

Engine Exhaust Temperatures
Ground Idle Power – CFM56-5B Series Engine
FIGURE-6-1-2-991-007-A01

****ON A/C A321-100 A321-200**

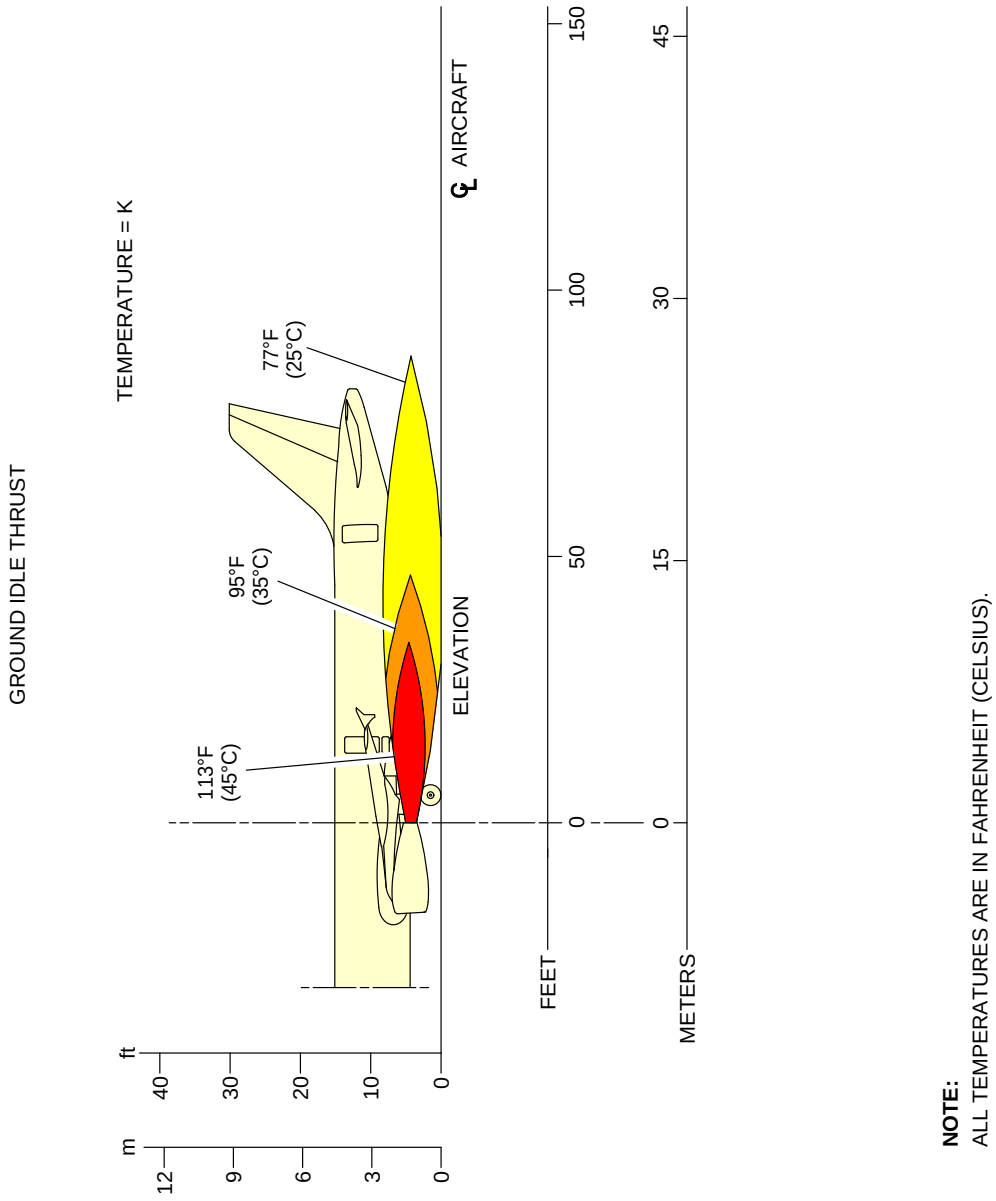

N_AC_060102_1_0080101_01_01

Engine Exhaust Temperatures
Ground Idle Power – IAE V2500 Series Engine
FIGURE-6-1-2-991-008-A01

**ON A/C A321neo A321neo-XLR

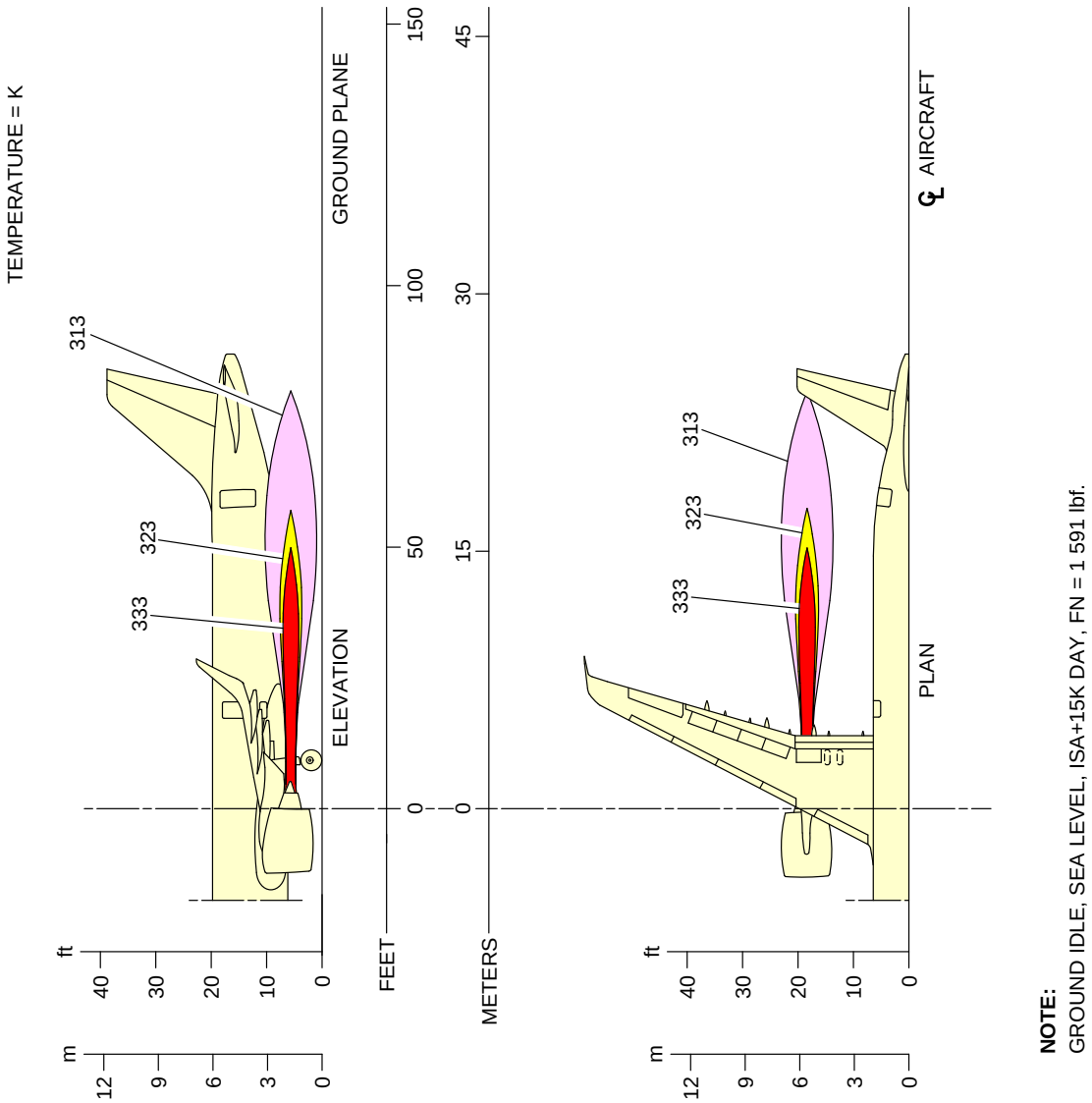

N_AC_060102_1_0130101_01_01

Engine Exhaust Temperatures
Ground Idle Power – CFM LEAP-1A Engine
FIGURE-6-1-2-991-013-A01

**ON A/C A321neo A321neo-XLR

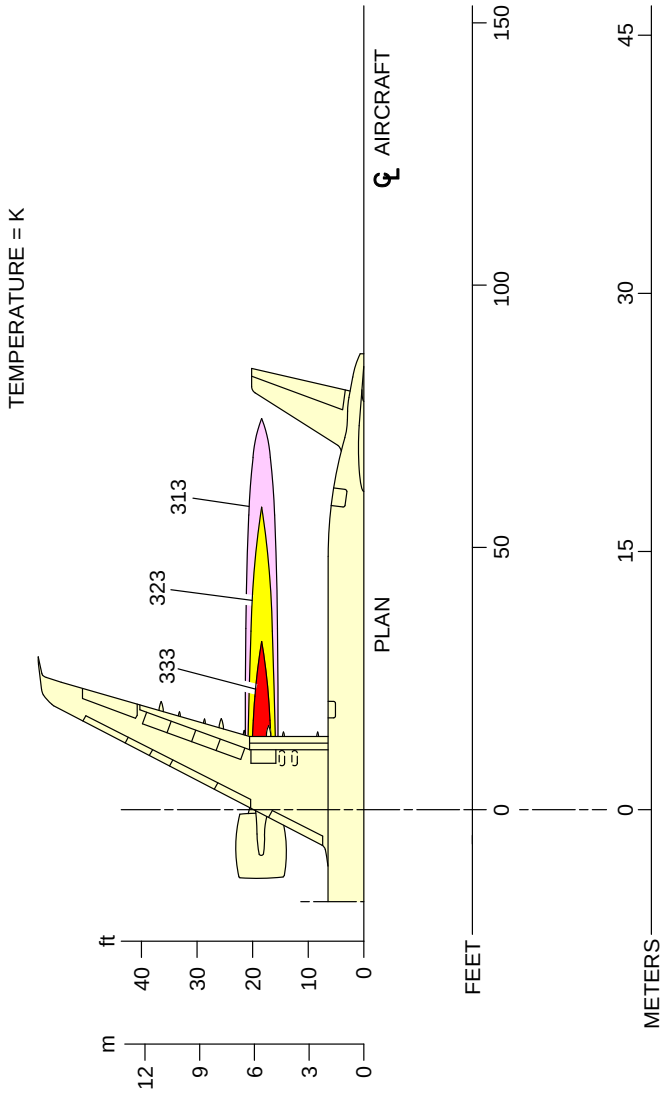

N_AC_060102_1_0140101_01_01

Engine Exhaust Temperatures
Ground Idle Power – PW 1100G Engine
FIGURE-6-1-2-991-014-A01

6-1-3 Engine Exhaust Velocities Contours - Breakaway Power

****ON A/C A321-100 A321-200 A321neo A321neo-XLR**

Engine Exhaust Velocities Contours - Breakaway Power

1. This section provides engine exhaust velocities contours at breakaway power.

**ON A/C A321neo A321neo-XLR

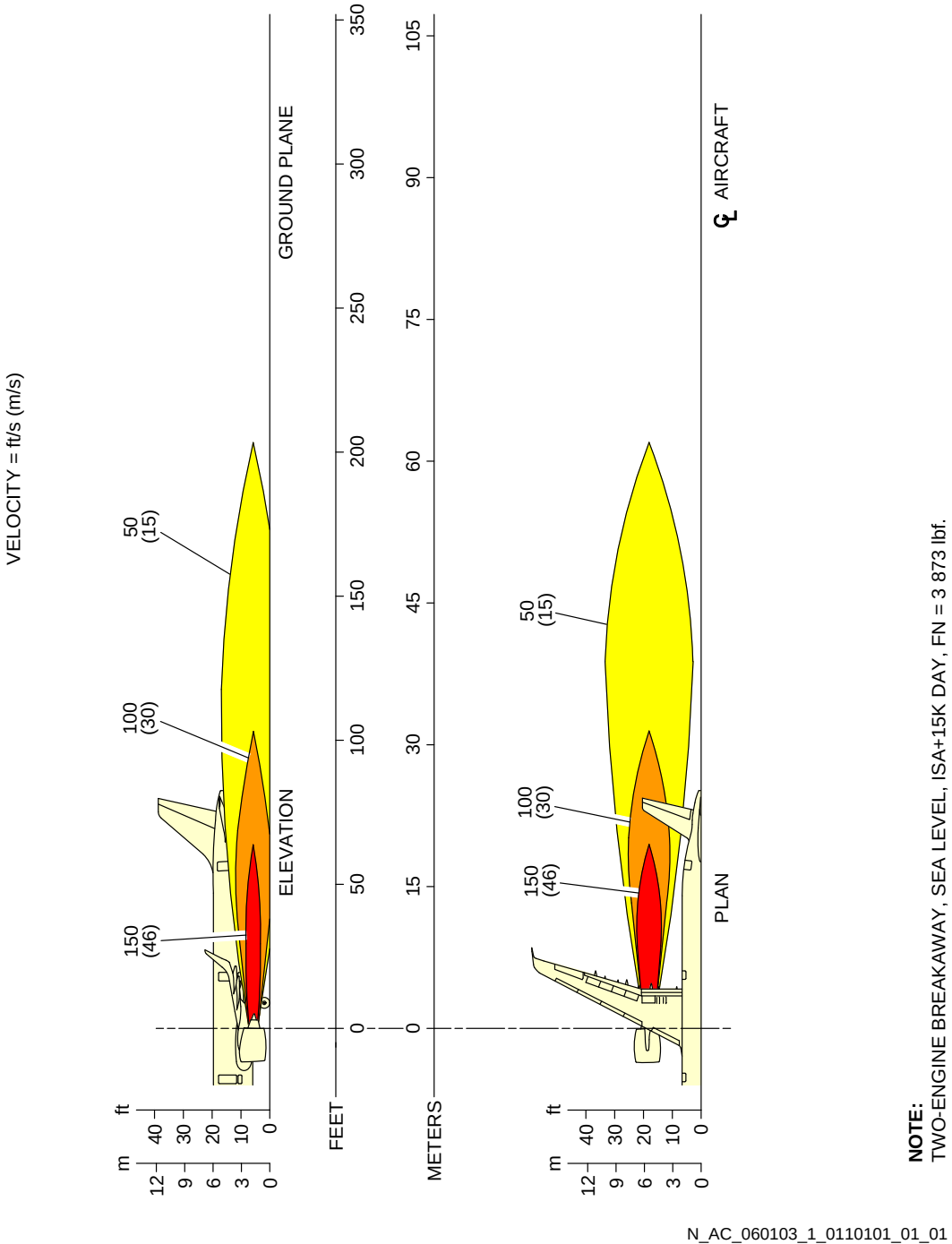

Engine Exhaust Velocities
Breakaway Power 12% MTO – CFM LEAP-1A Engine
FIGURE-6-1-3-991-011-A01

**ON A/C A321neo A321neo-XLR

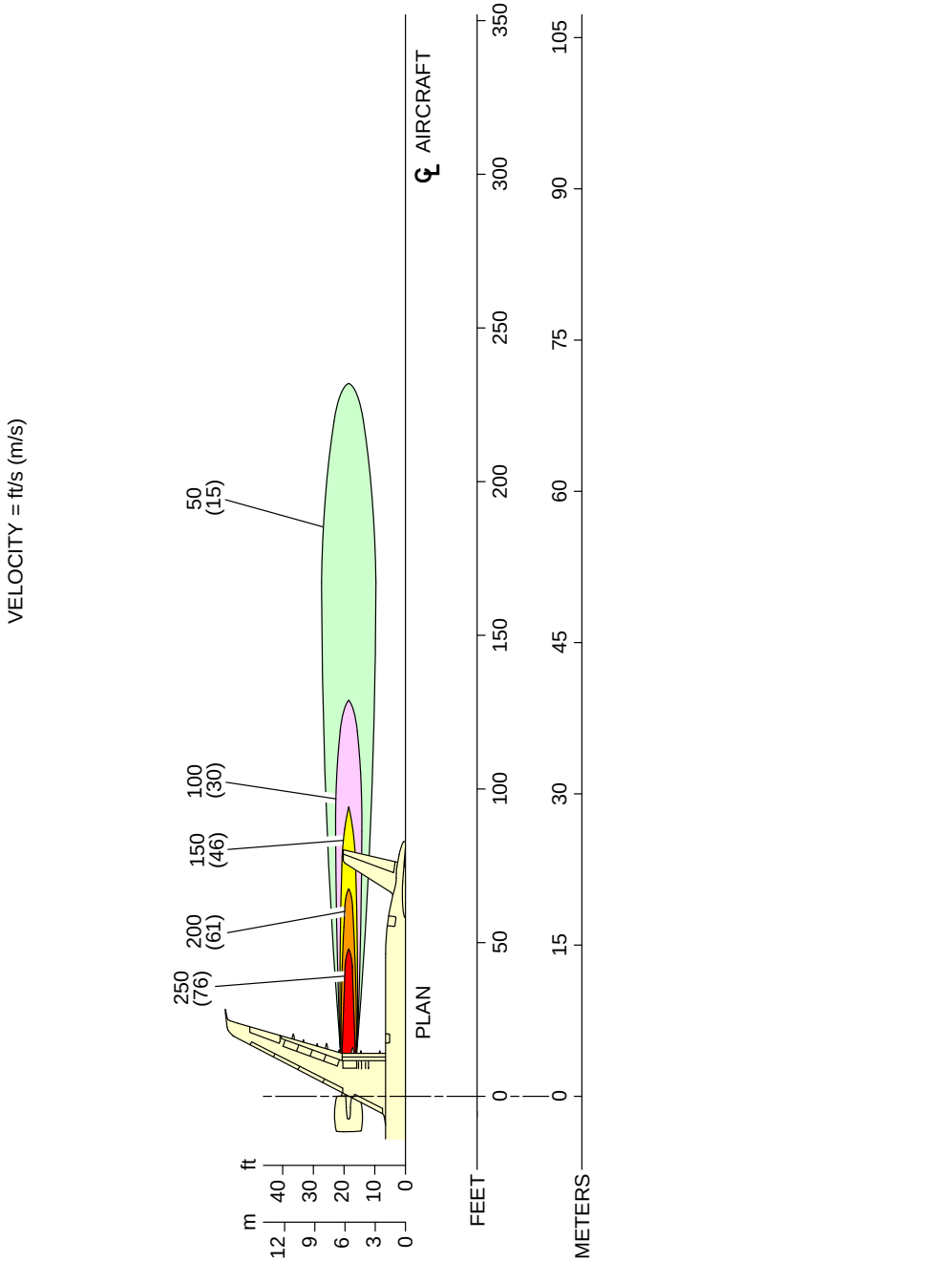

N_AC_060103_1_0120101_01_01

Engine Exhaust Velocities
Breakaway Power 12% MTO – PW 1100G Engine
FIGURE-6-1-3-991-012-A01

**ON A/C A321neo A321neo-XLR

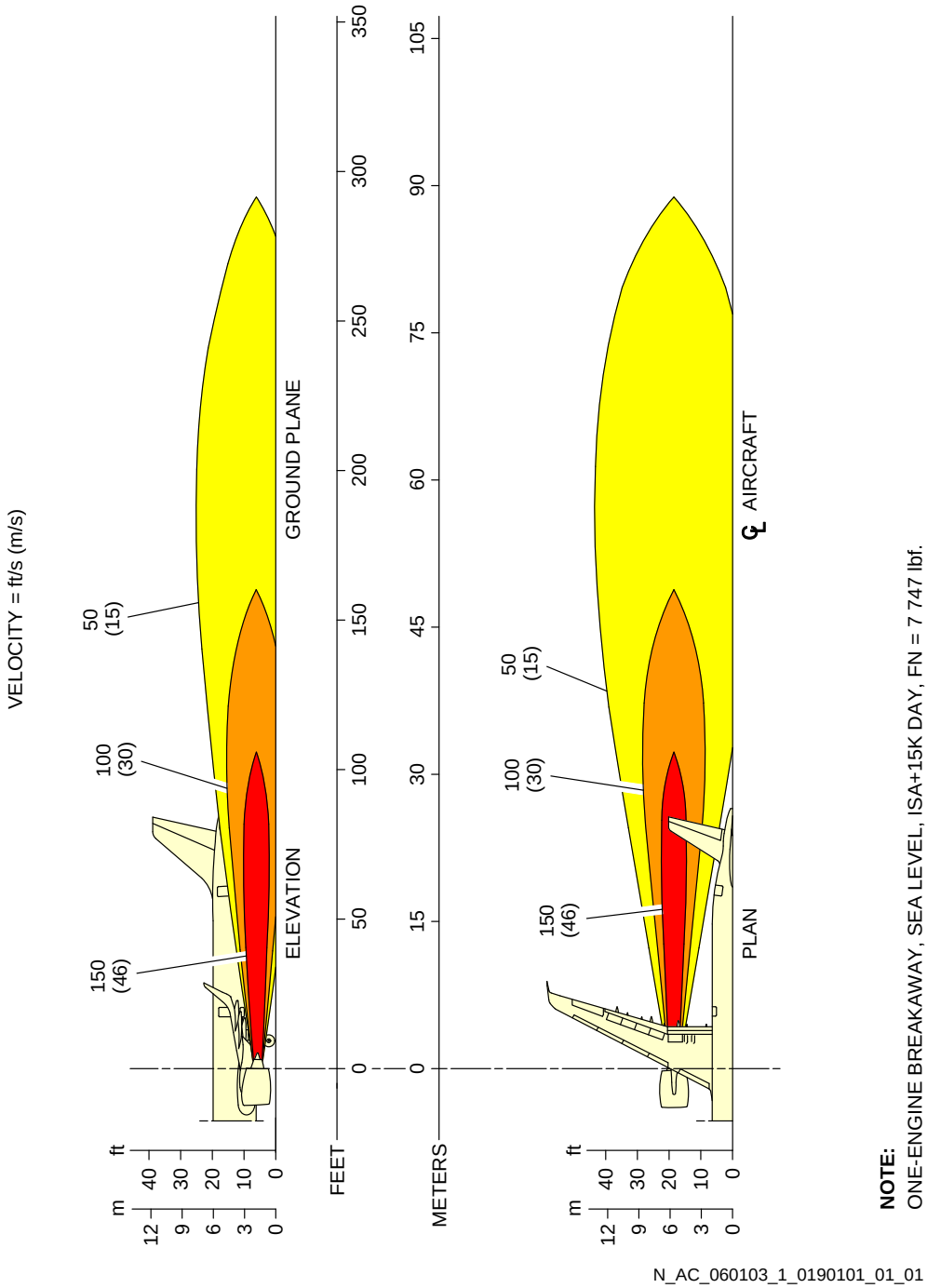

Engine Exhaust Velocities
Breakaway Power 24% MTO – CFM LEAP-1A Engine
FIGURE-6-1-3-991-019-A01

**ON A/C A321neo A321neo-XLR

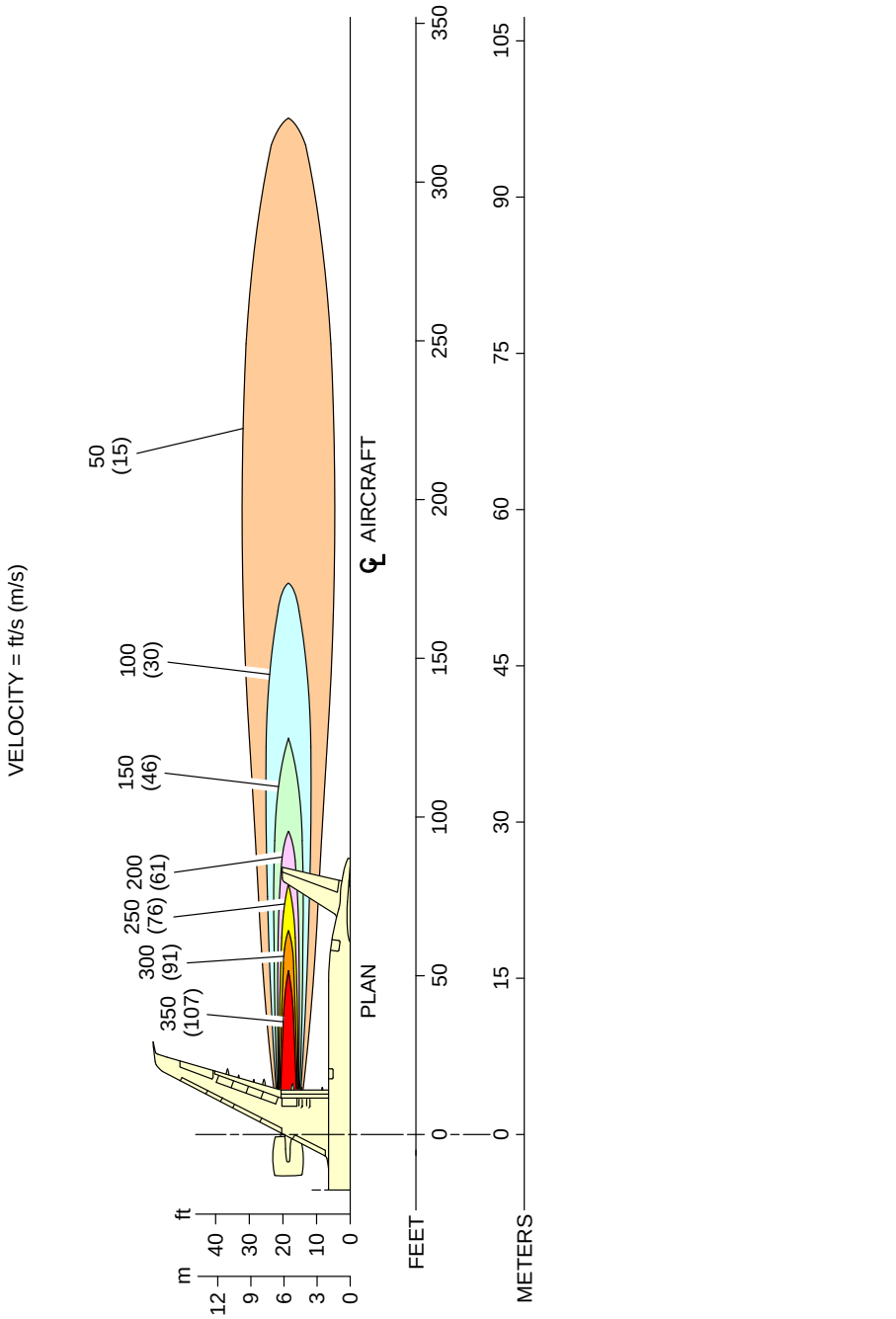

N_AC_060103_1_0200101_01_01

Engine Exhaust Velocities
Breakaway Power 24% MTO – PW 1100G Engine
FIGURE-6-1-3-991-020-A01

****ON A/C A321-100 A321-200**

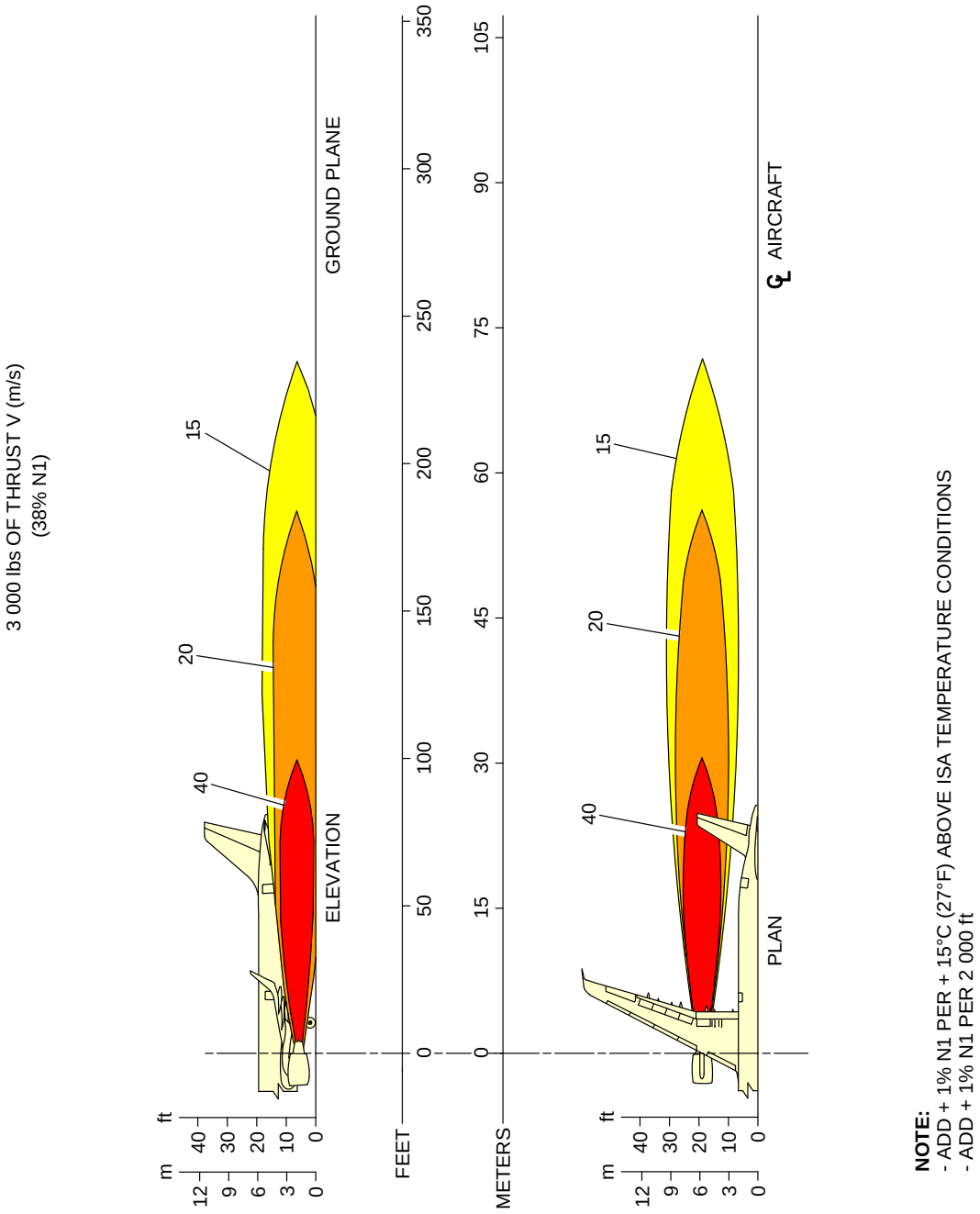

Engine Exhaust Velocities
Breakaway Power - CFM56 Series Engine
FIGURE-6-1-3-991-023-A01

****ON A/C A321-100 A321-200**

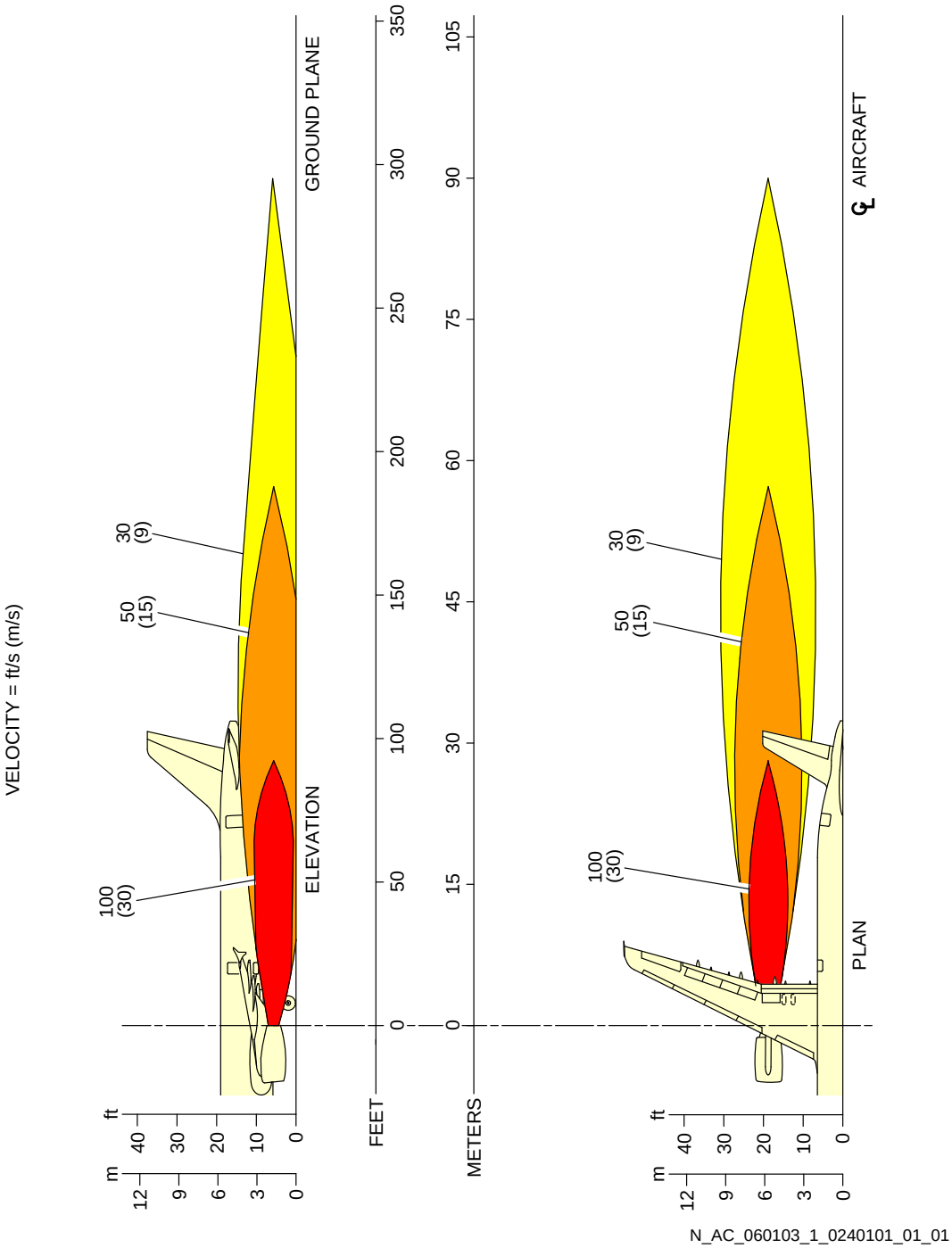

Engine Exhaust Velocities
Breakaway Power 13% MTO - IAE V2500 Series Engine
FIGURE-6-1-3-991-024-A01

**ON A/C A321-100 A321-200

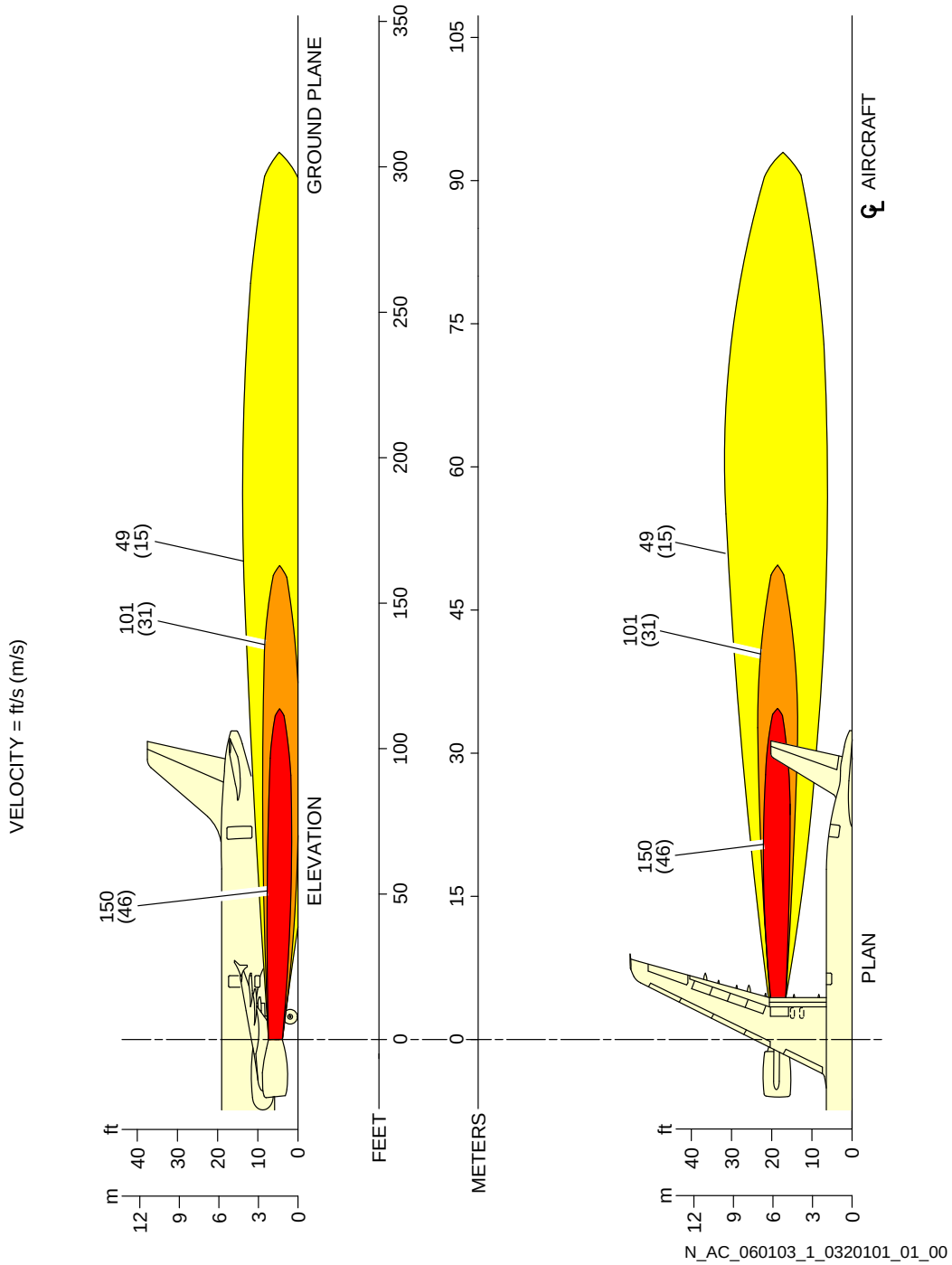

Engine Exhaust Velocities
Breakaway Power 26% MTO - IAE V2500 Series Engine
6-1-3-991-032-A01

6-1-4 Engine Exhaust Temperatures Contours - Breakaway Power

****ON A/C A321-100 A321-200 A321neo A321neo-XLR**

Engine Exhaust Temperatures Contours - Breakaway Power

1. This section provides engine exhaust temperatures contours at breakaway power.

**ON A/C A321neo A321neo-XLR

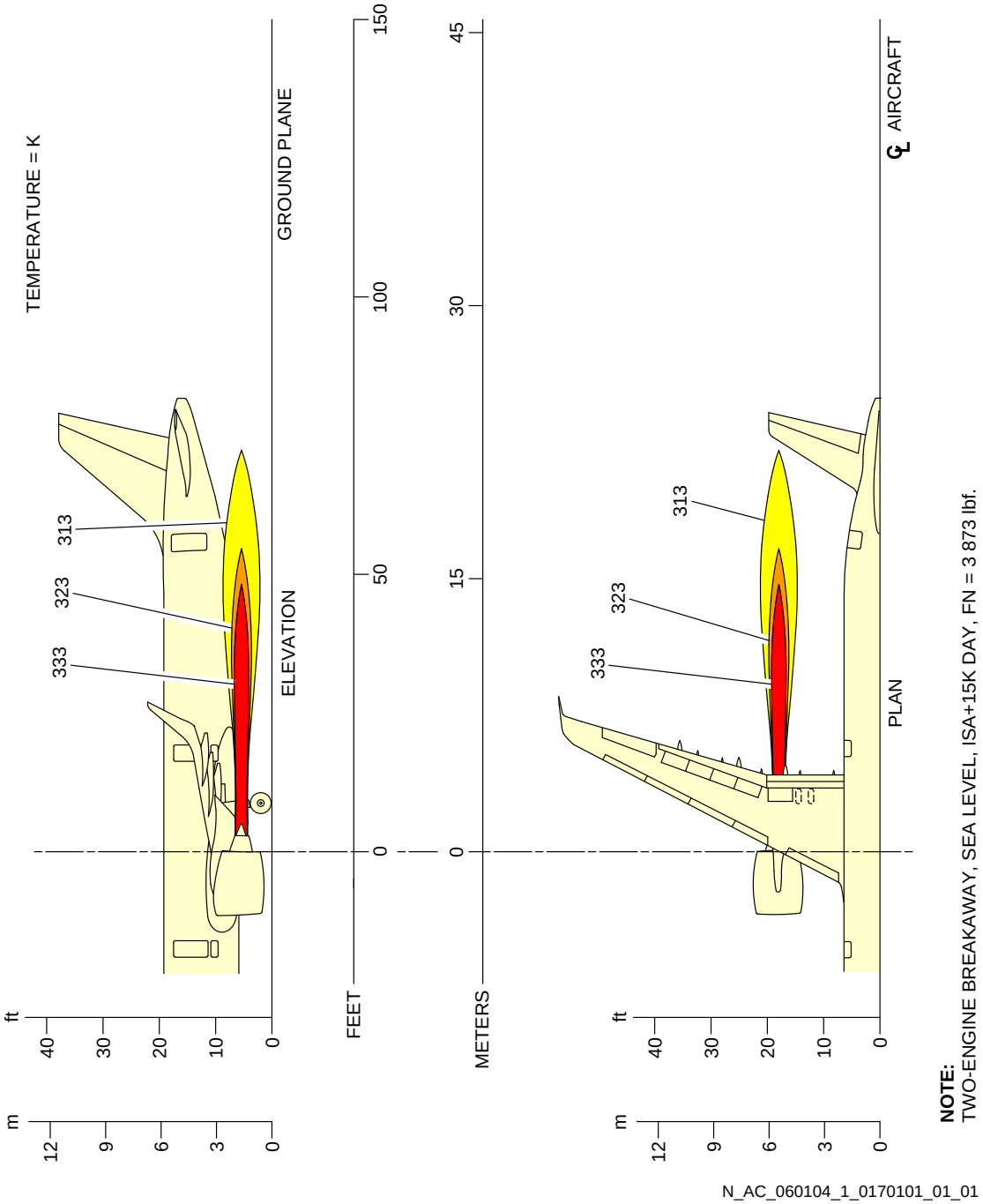

Engine Exhaust Temperatures
Breakaway Power 12% MTO - CFM LEAP-1A Engine
FIGURE-6-1-4-991-017-A01

**ON A/C A321neo A321neo-XLR

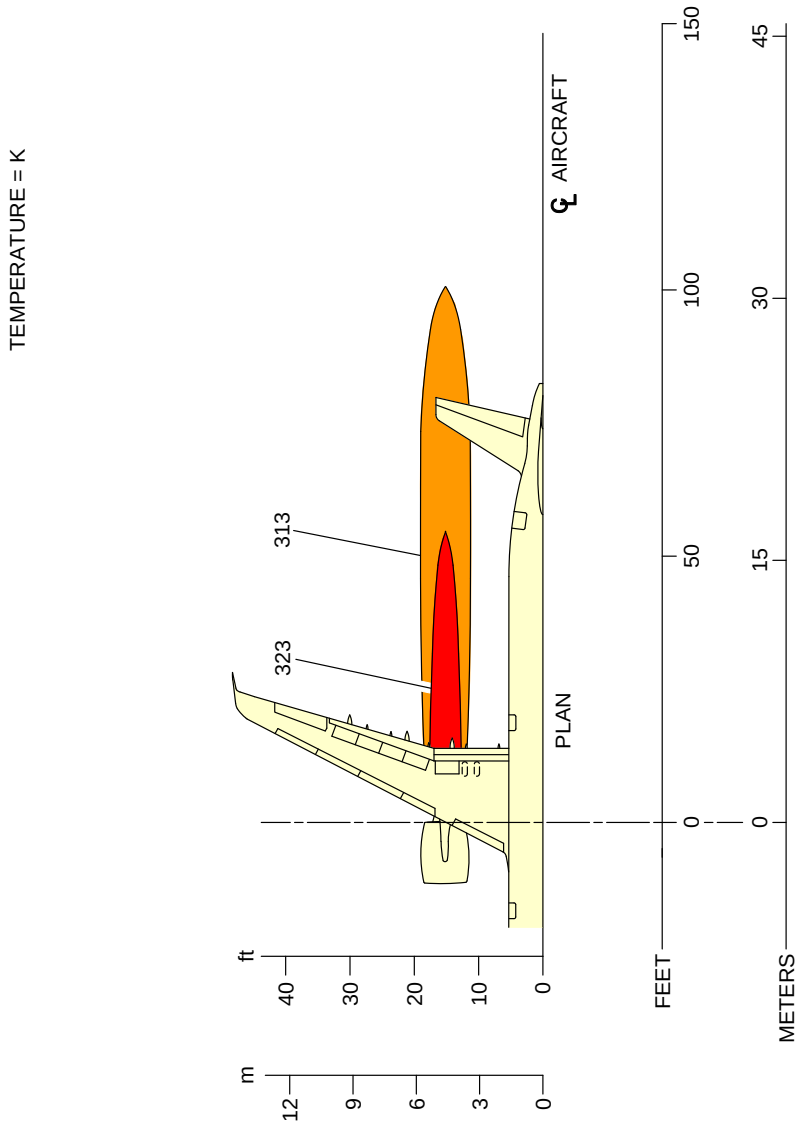

N_AC_060104_1_0180101_01_01

Engine Exhaust Temperatures
Breakaway Power 12% MTO - PW 1100G Engine
FIGURE-6-1-4-991-018-A01

**ON A/C A321neo A321neo-XLR

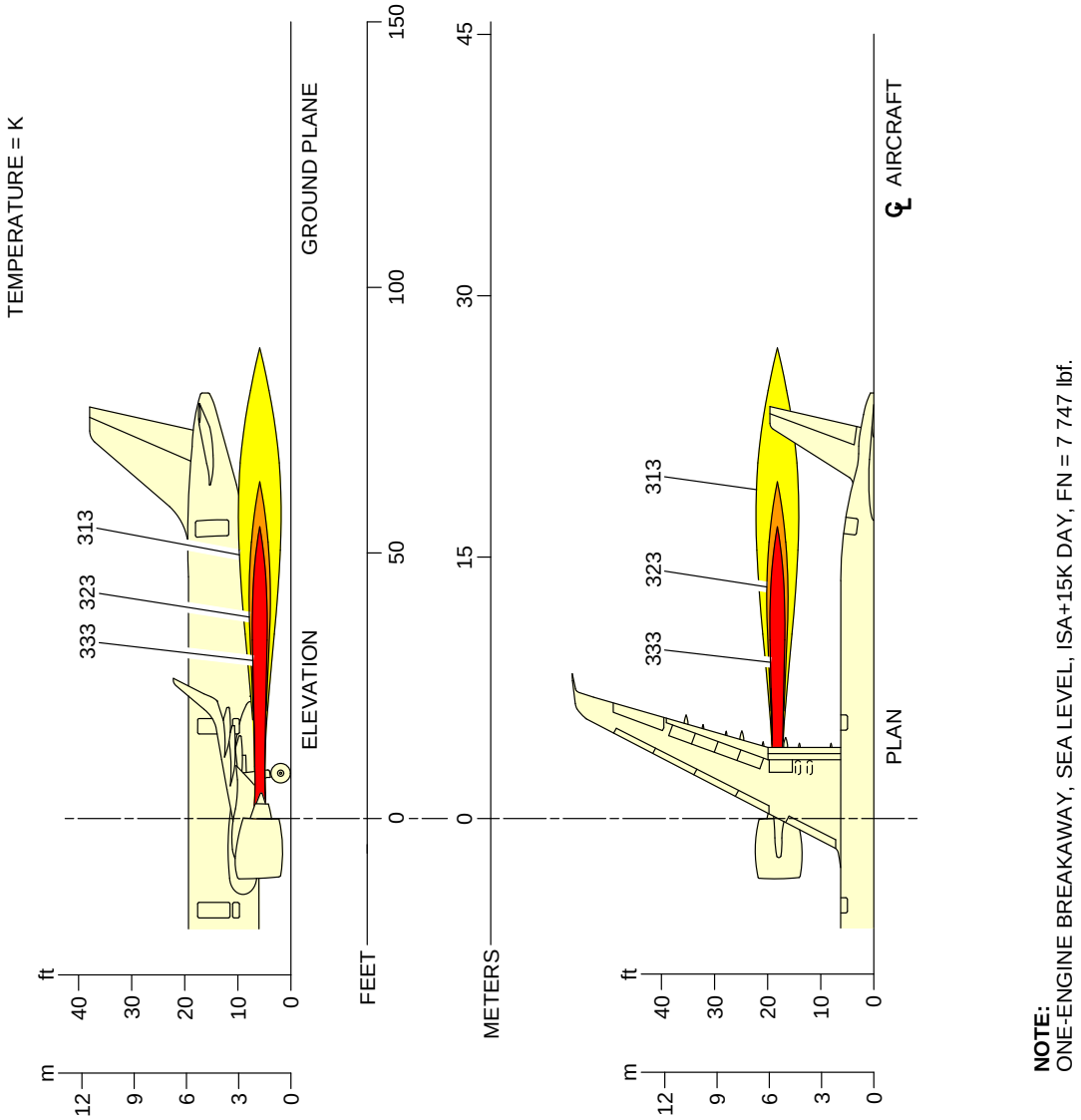

N_AC_060104_1_0190101_01_01

Engine Exhaust Temperatures
Breakaway Power 24% MTO - CFM LEAP-1A Engine
FIGURE-6-1-4-991-019-A01

**ON A/C A321neo A321neo-XLR

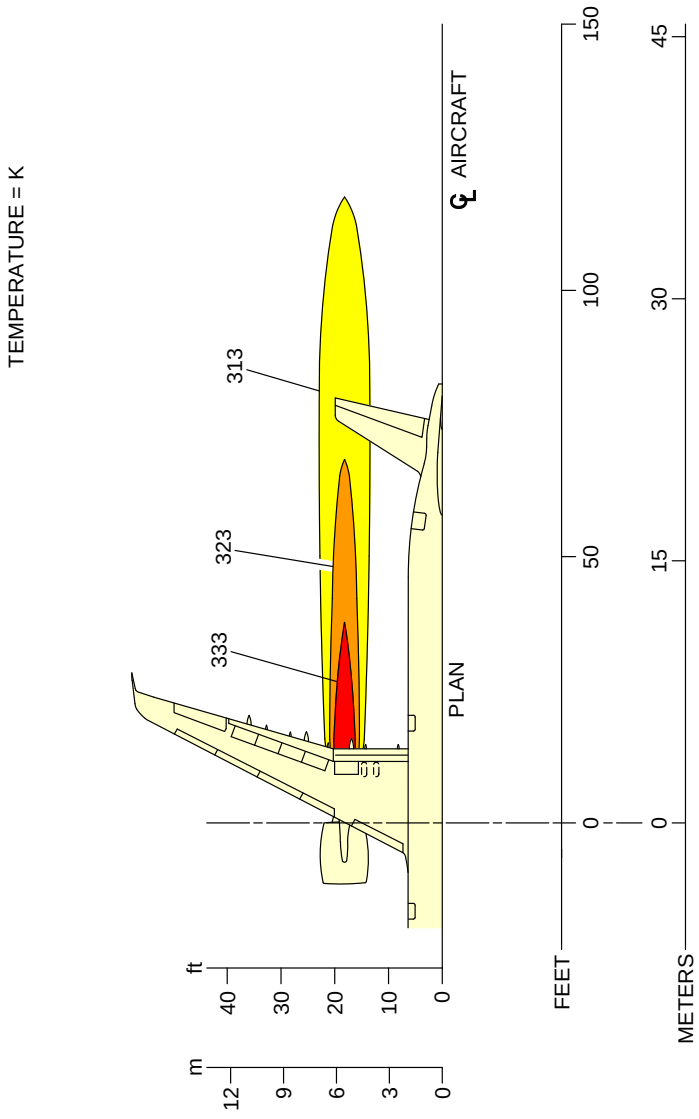

N_AC_060104_1_0200101_01_01

Engine Exhaust Temperatures
Breakaway Power 24% MTO - PW 1100G Engine
FIGURE-6-1-4-991-020-A01

****ON A/C A321-100 A321-200**

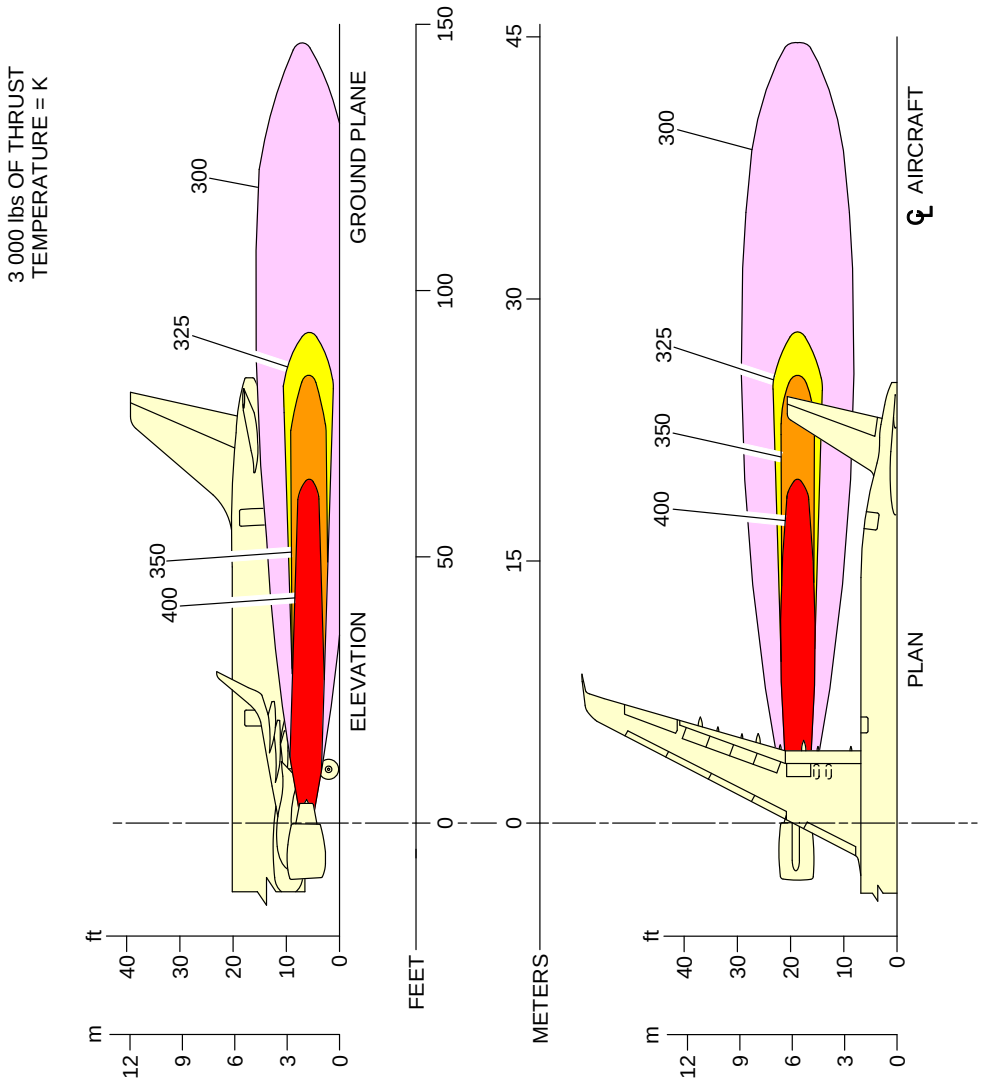

N_AC_060104_1_0230101_01_01

Engine Exhaust Temperatures
Breakaway Power - CFM56 Series Engine
FIGURE-6-1-4-991-023-A01

****ON A/C A321-100 A321-200**

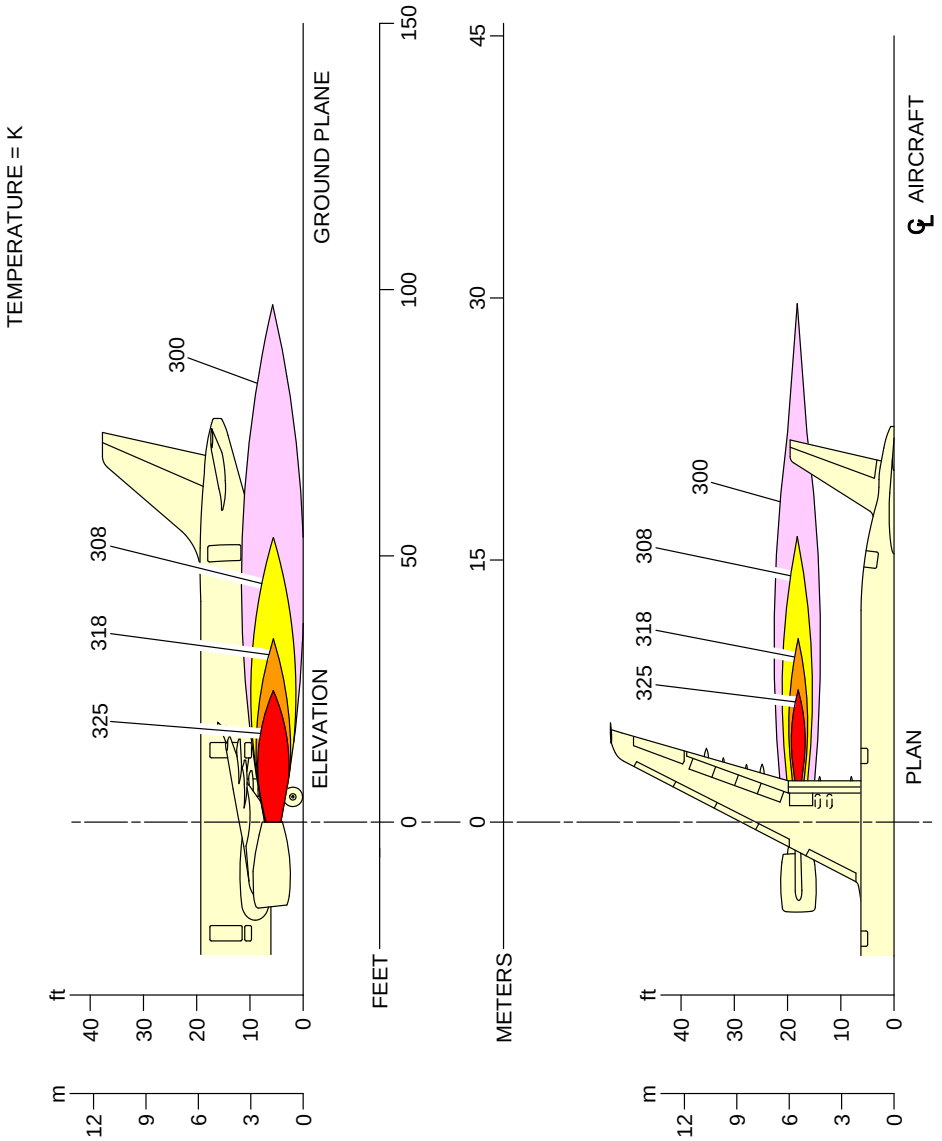

N_AC_060104_1_0240101_01_01

Engine Exhaust Temperatures
Breakaway Power 13% MTO - IAE V2500 Series Engine
FIGURE-6-1-4-991-024-A01

**ON A/C A321-100 A321-200

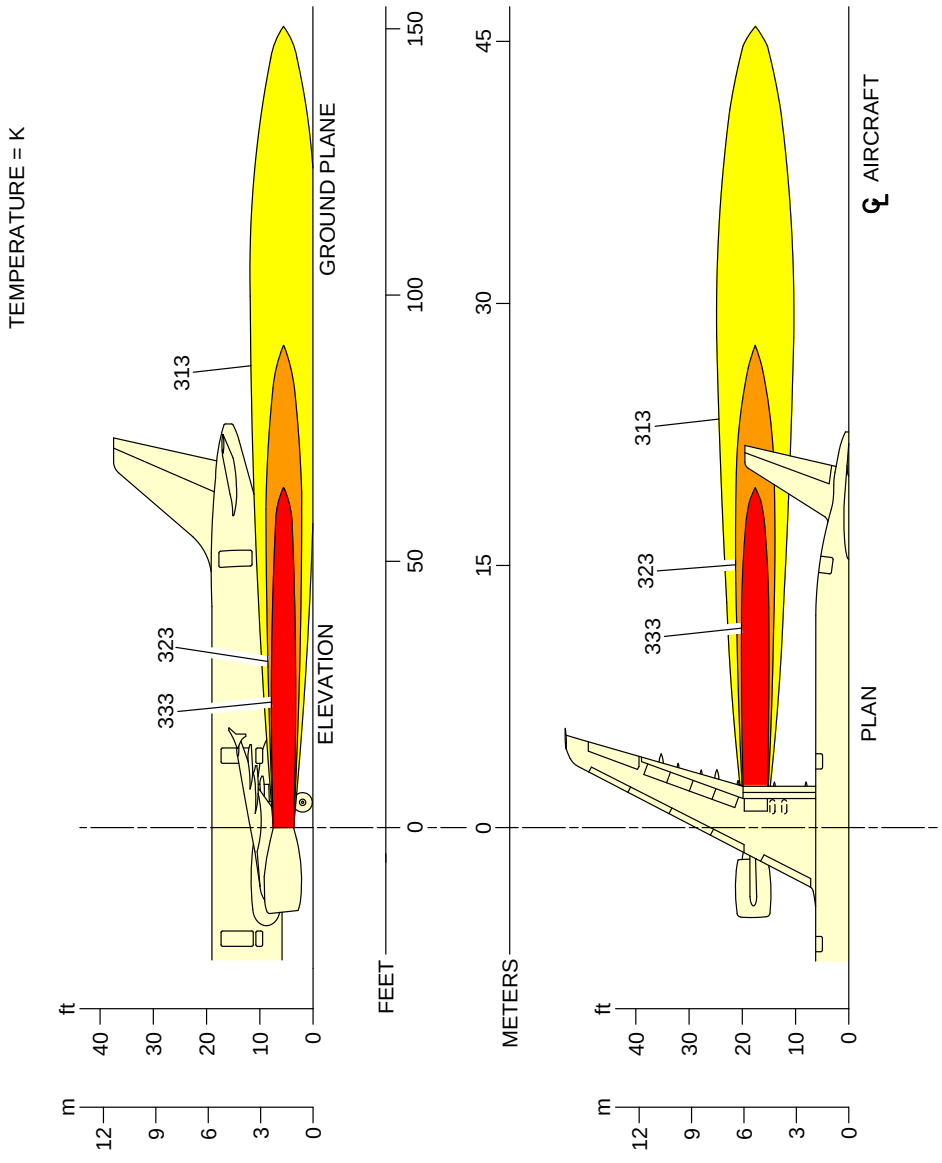

N_AC_060104_1_0270101_01_00

Engine Exhaust Temperatures
Breakaway Power 26% MTO - IAE V2500 Series Engine
6-1-4-991-027-A01

6-1-5 Engine Exhaust Velocities Contours - Takeoff Power

****ON A/C A321-100 A321-200 A321neo A321neo-XLR**

Engine Exhaust Velocities Contours - Takeoff Power

1. This section provides engine exhaust velocities contours at takeoff power.

****ON A/C A321-100 A321-200**

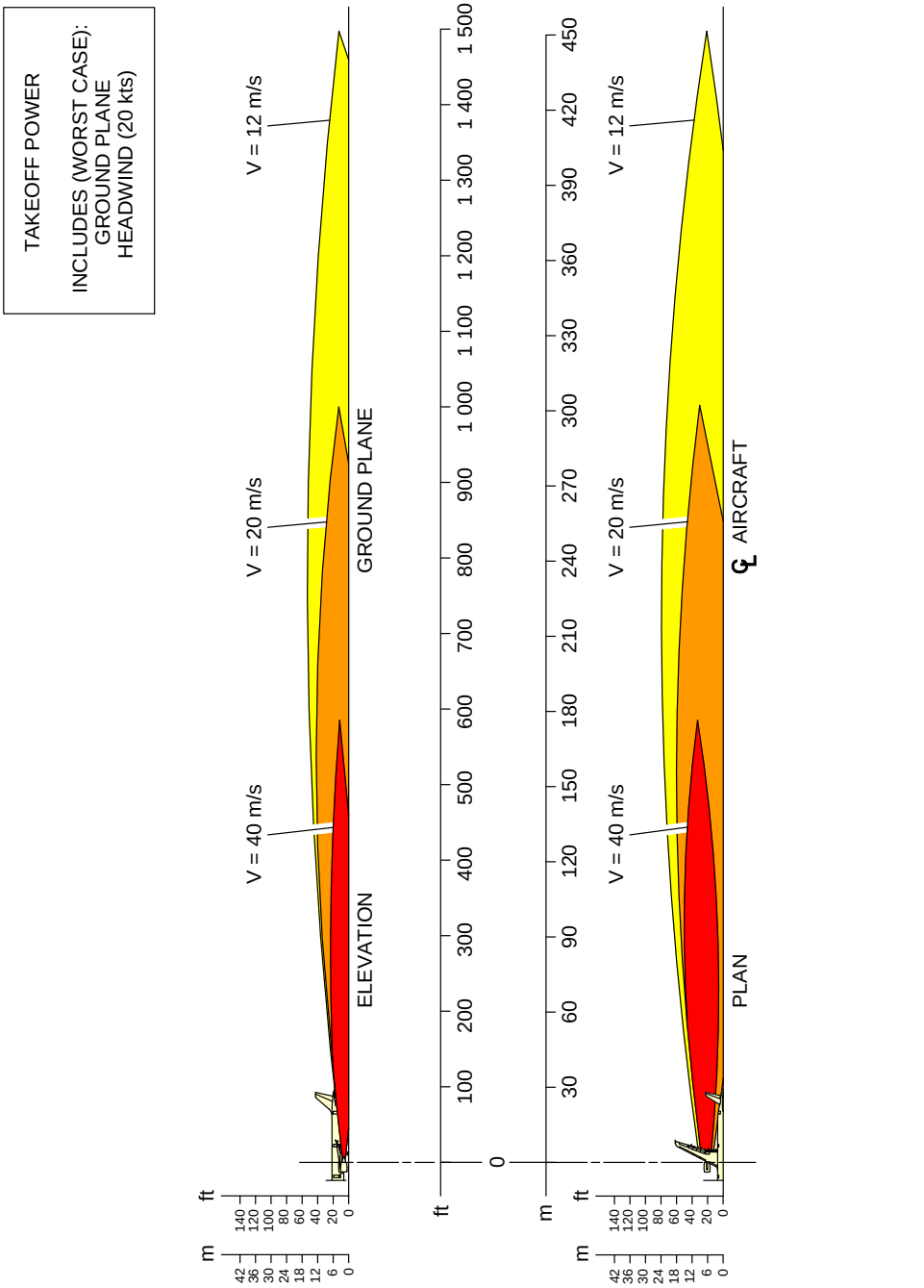

N_AC_060105_1_0070101_01_01

Engine Exhaust Velocities
Takeoff Power – CFM56-5B Series Engine
FIGURE-6-1-5-991-007-A01

****ON A/C A321-100 A321-200**

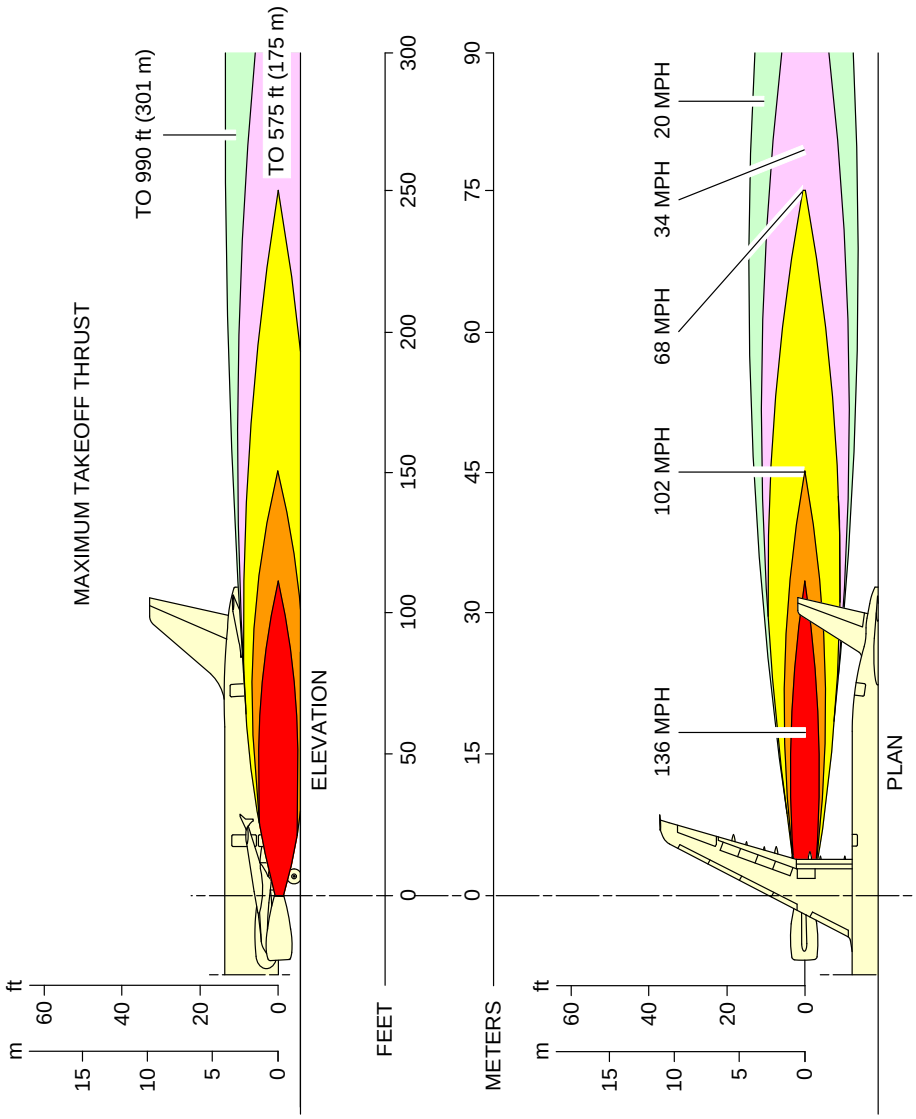

N_AC_060105_1_0080101_01_00

Engine Exhaust Velocities
Takeoff Power – IAE V2500 Series Engine
FIGURE-6-1-5-991-008-A01

**ON A/C A321neo A321neo-XLR

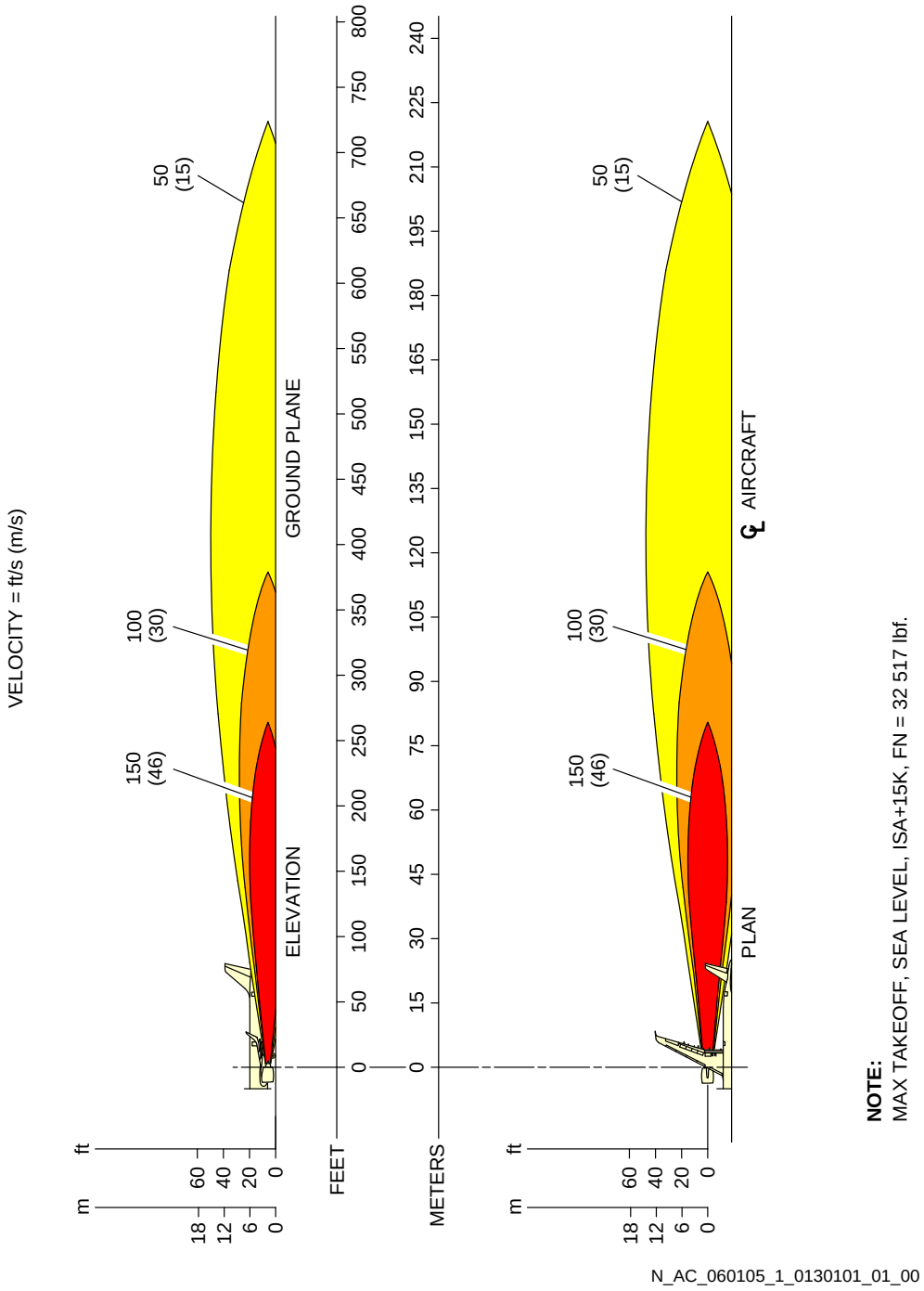

Engine Exhaust Velocities
Takeoff Power – CFM LEAP-1A Engine
FIGURE-6-1-5-991-013-A01

**ON A/C A321neo A321neo-XLR

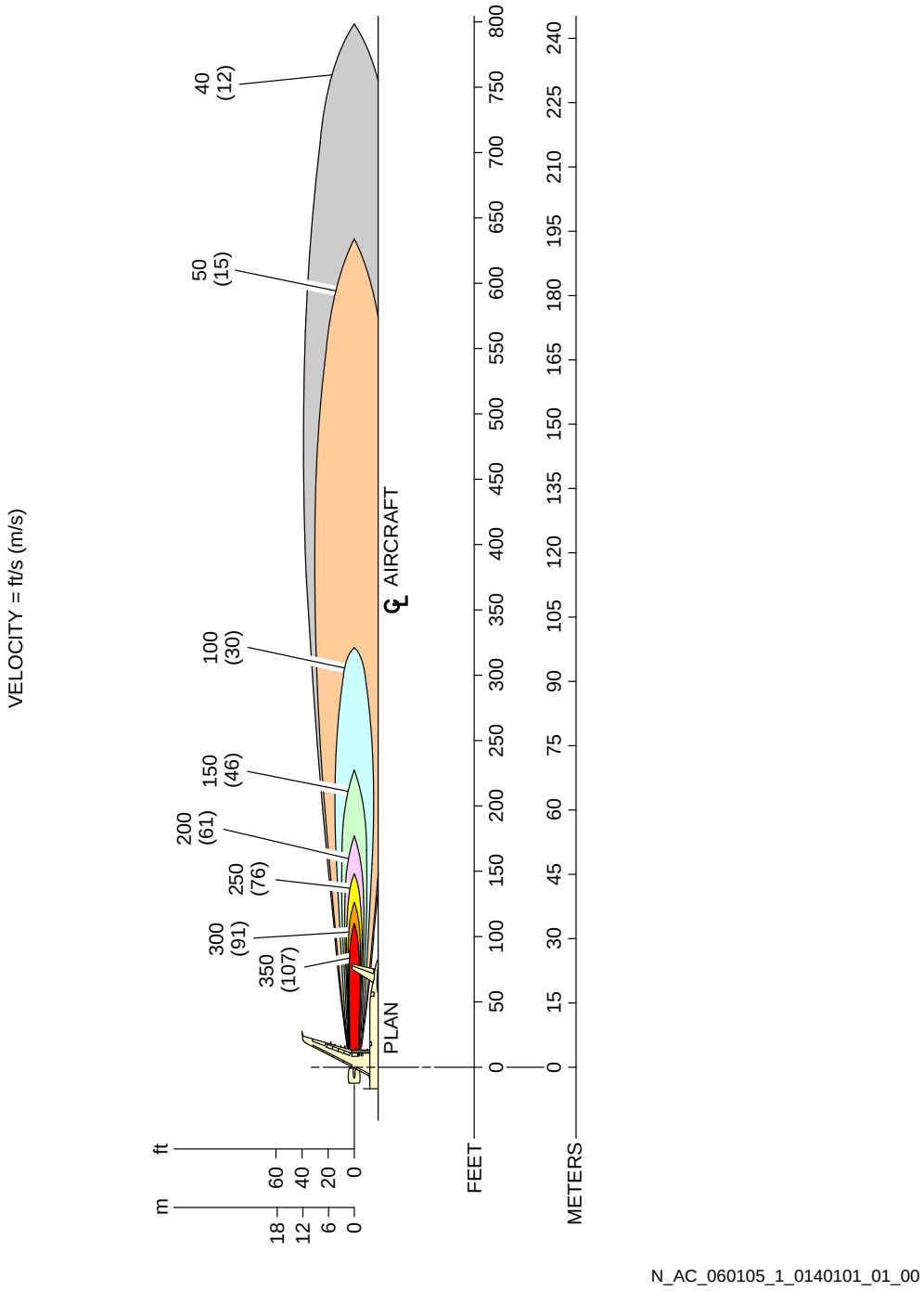

N_AC_060105_1_0140101_01_00

Engine Exhaust Velocities
Takeoff Power – PW 1100G Engine
FIGURE-6-1-5-991-014-A01

6-1-6 Engine Exhaust Temperatures Contours - Takeoff Power

****ON A/C A321-100 A321-200 A321neo A321neo-XLR**

Engine Exhaust Temperatures Contours - Takeoff Power

1. This section provides engine exhaust temperatures contours at takeoff power.

****ON A/C A321-100 A321-200**

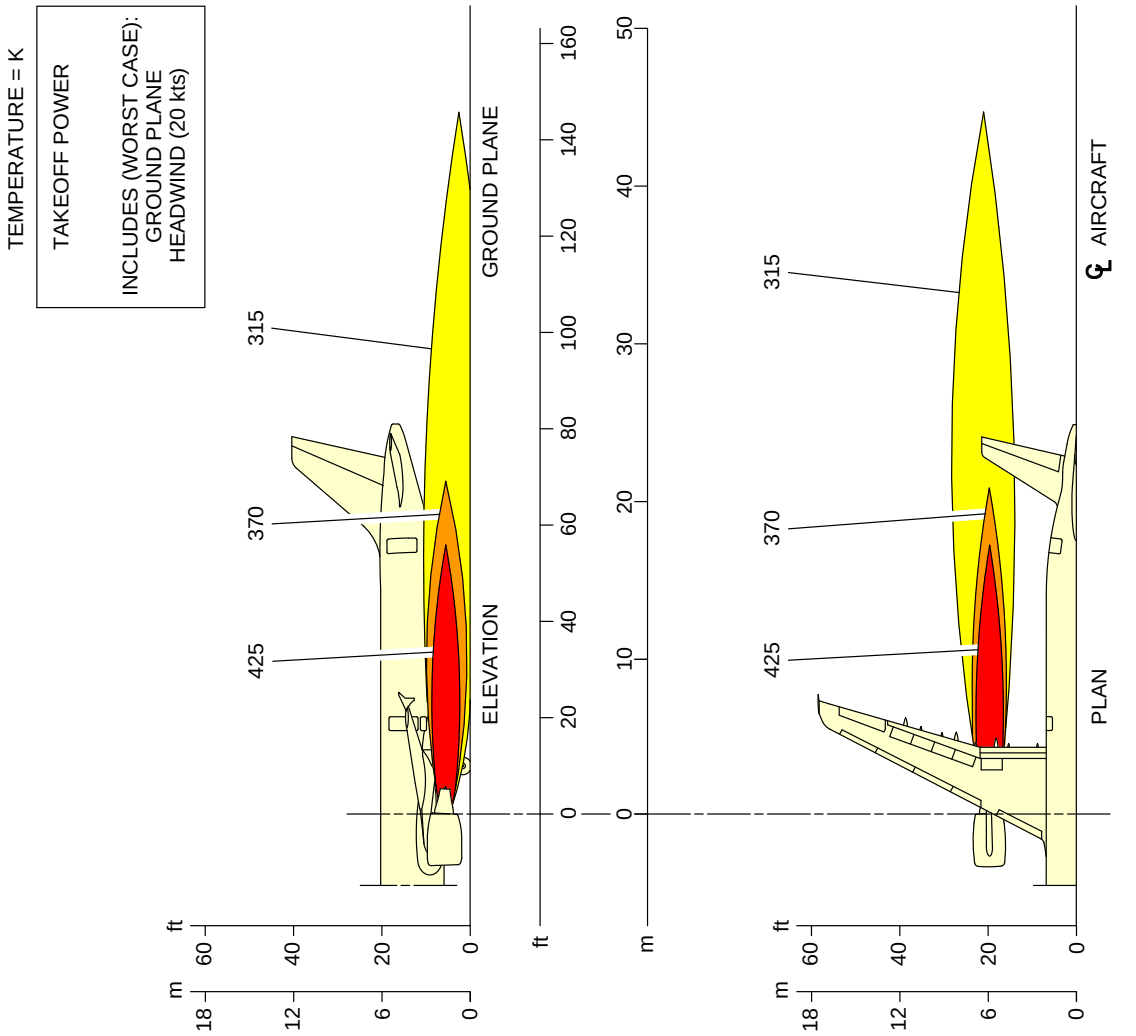

N_AC_060106_1_0070101_01_01

Engine Exhaust Temperatures
Takeoff Power – CFM56-5B Series Engine
FIGURE-6-1-6-991-007-A01

****ON A/C A321-100 A321-200**

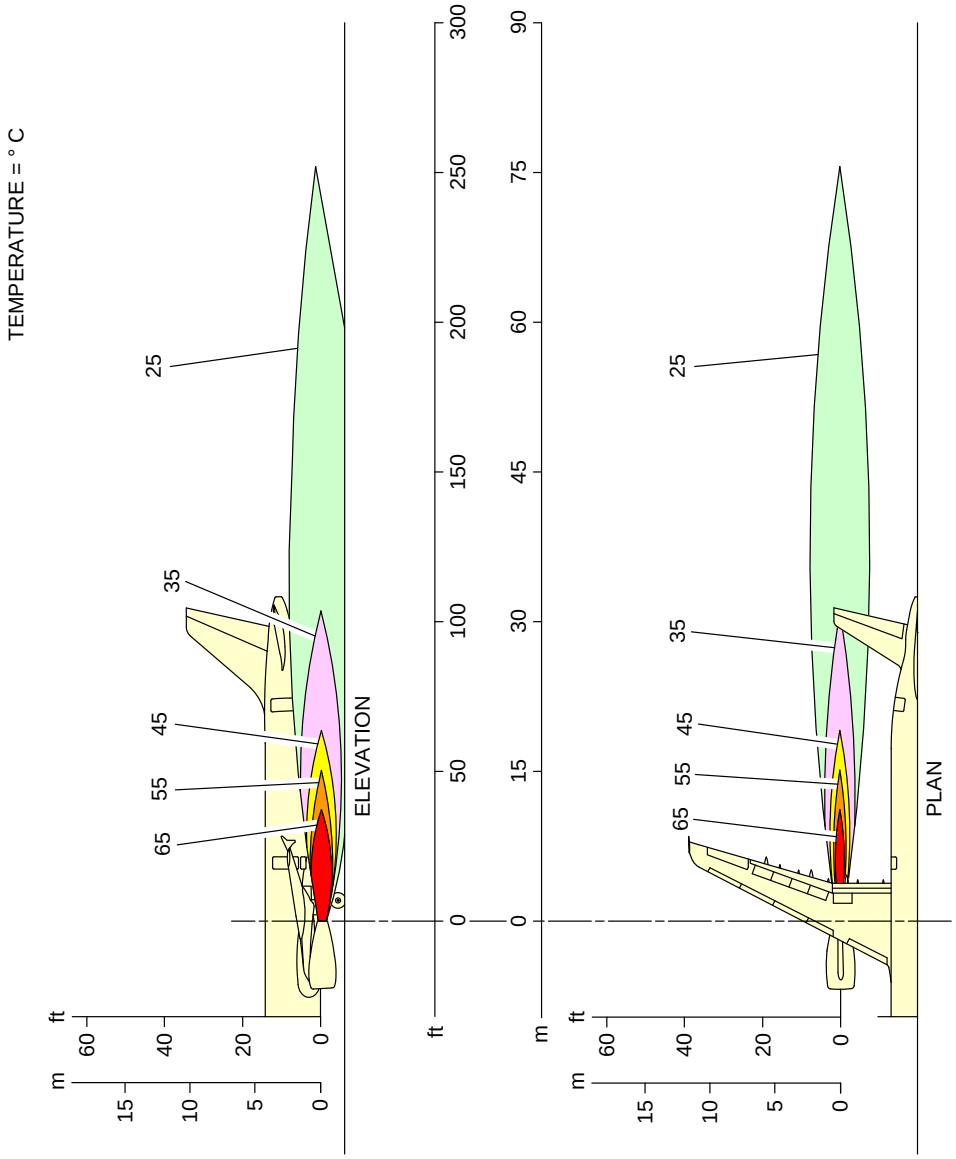

N_AC_060106_1_0080101_01_01

Engine Exhaust Temperatures
Takeoff Power – IAE V2500 Series Engine
FIGURE-6-1-6-991-008-A01

**ON A/C A321neo A321neo-XLR

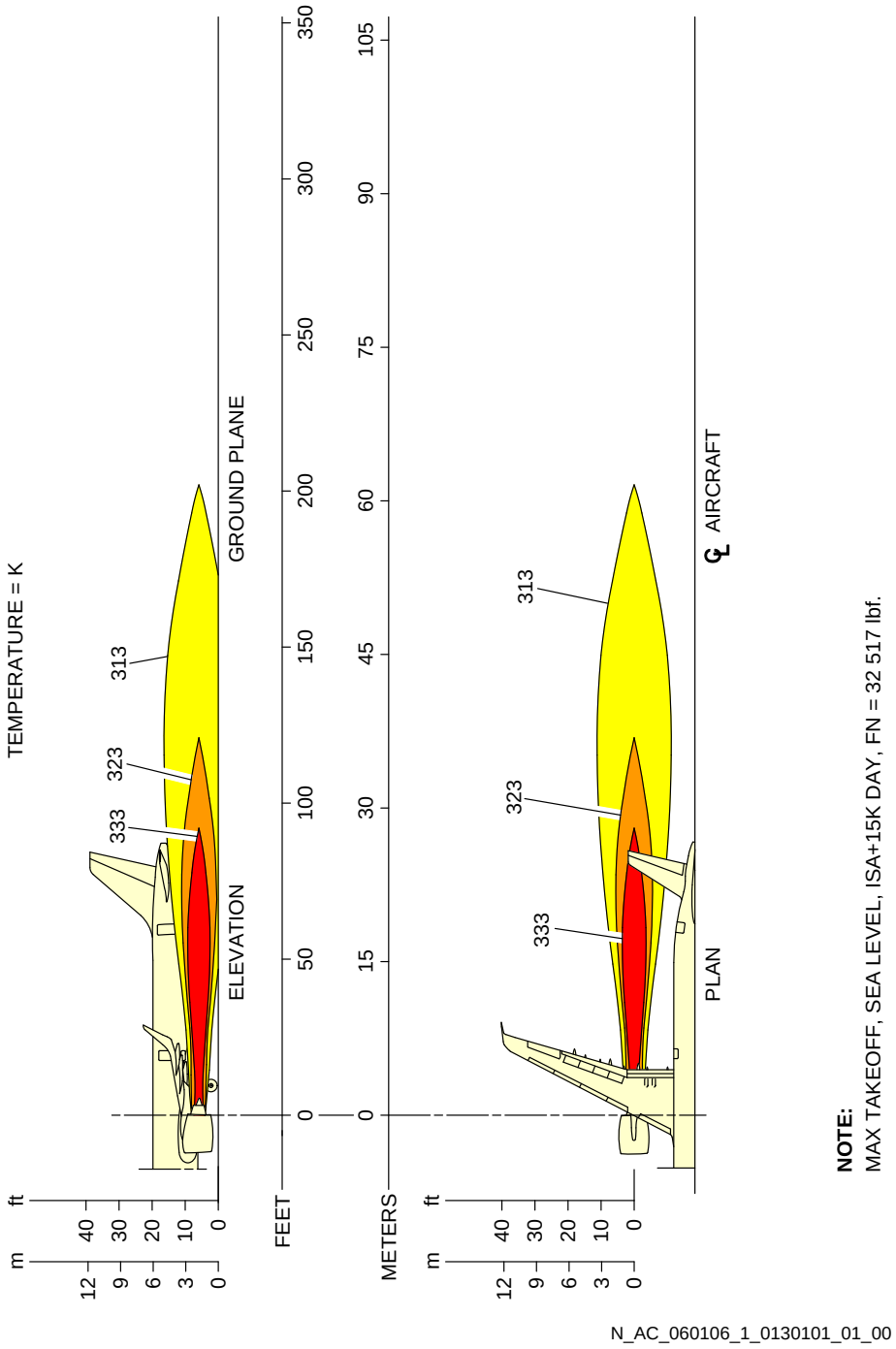

Engine Exhaust Temperatures
Takeoff Power - CFM LEAP-1A Engine
FIGURE-6-1-6-991-013-A01

**ON A/C A321neo A321neo-XLR

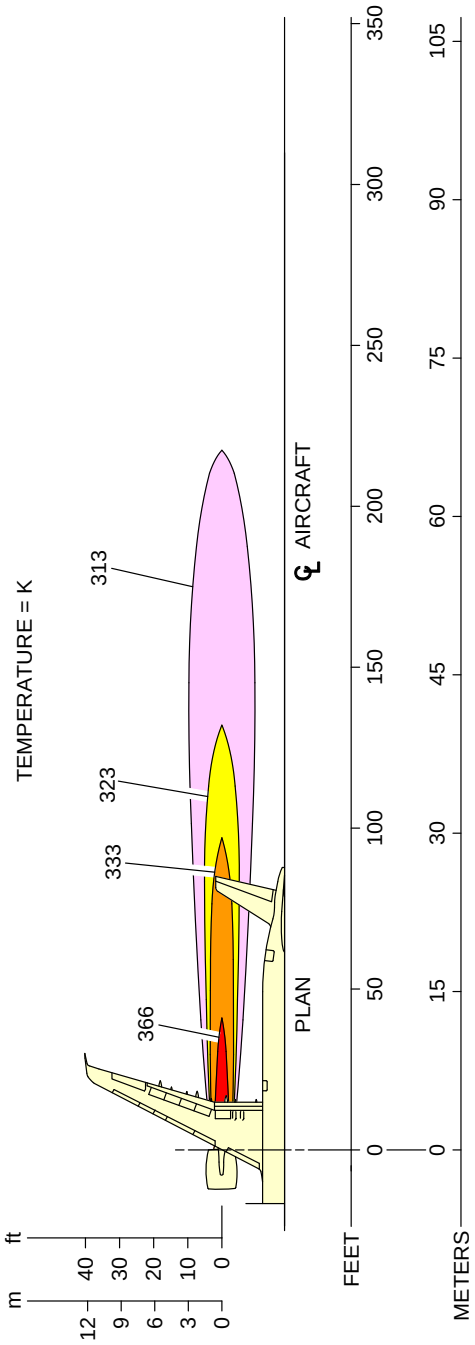

N_AC_060106_1_0140101_01_00

Engine Exhaust Temperatures
Takeoff Power - PW 1100G Engine
FIGURE-6-1-6-991-014-A01

6-3-0 Danger Areas of Engines

****ON A/C A321-100 A321-200 A321neo A321neo-XLR**

Danger Areas of Engines

1. Danger Areas of the Engines

   A. The danger areas of the engines shown below are given in the normalized format:
      - Entry corridors are only available at ground idle.
      - Do not go into the areas between the engines.
      - The exhaust danger areas are given for 0 kt headwind (if not specified otherwise).

6-3-1 Ground Idle Power

****ON A/C A321-100 A321-200 A321neo A321neo-XLR**

Ground Idle Power

1. This section provides danger areas of the engines at ground idle power conditions.

****ON A/C A321-100 A321-200**

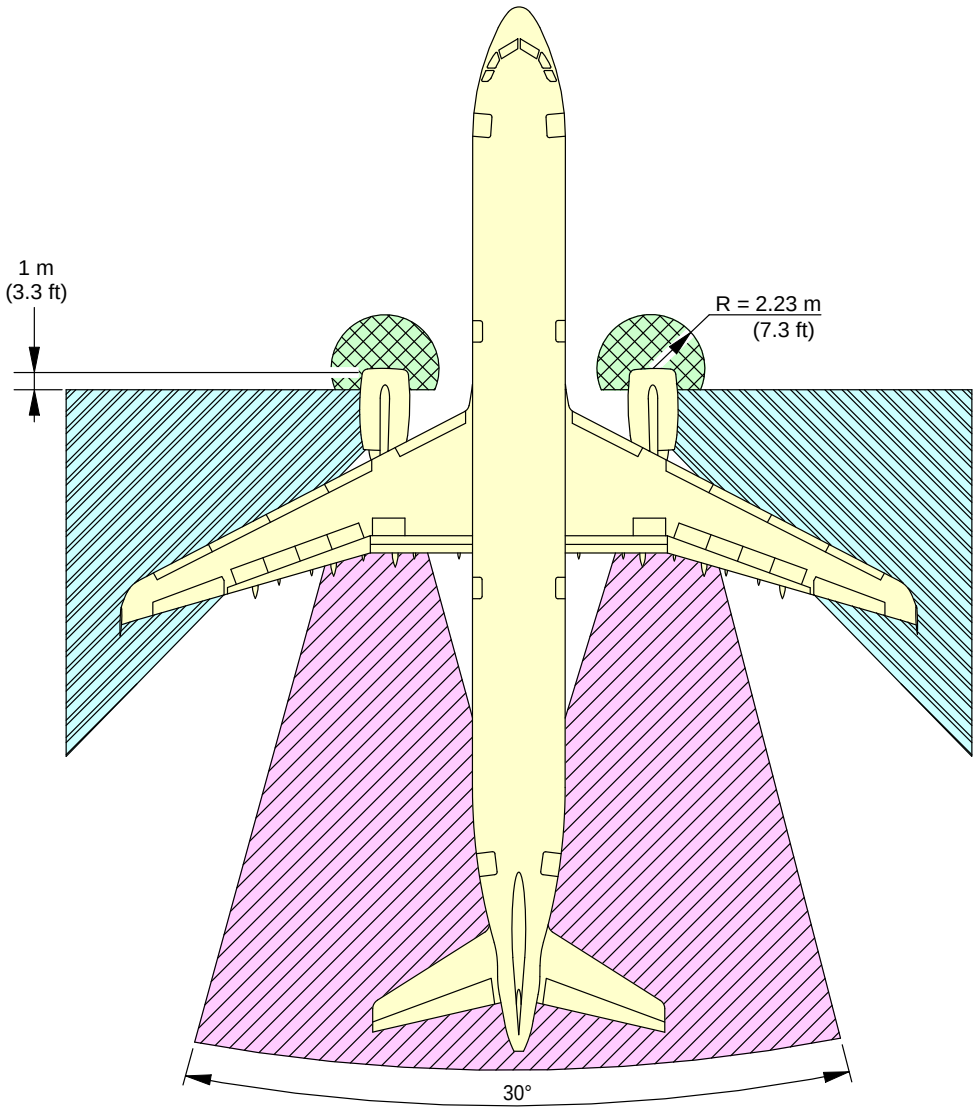

TO 55 m (180 ft) AFT OF COMMON NOZZLE ASSEMBLY (CNA)
INCLUDES CROSS WIND EFFECT

NOTE:

INLET SUCTION DANGER AREA

ENTRY CORRIDOR

EXHAUST WAKE DANGER AREA

N_AC_060301_1_0090101_01_04

Danger Areas of the Engines
CFM56-5B Series Engine
FIGURE-6-3-1-991-009-A01

****ON A/C A321-100 A321-200**

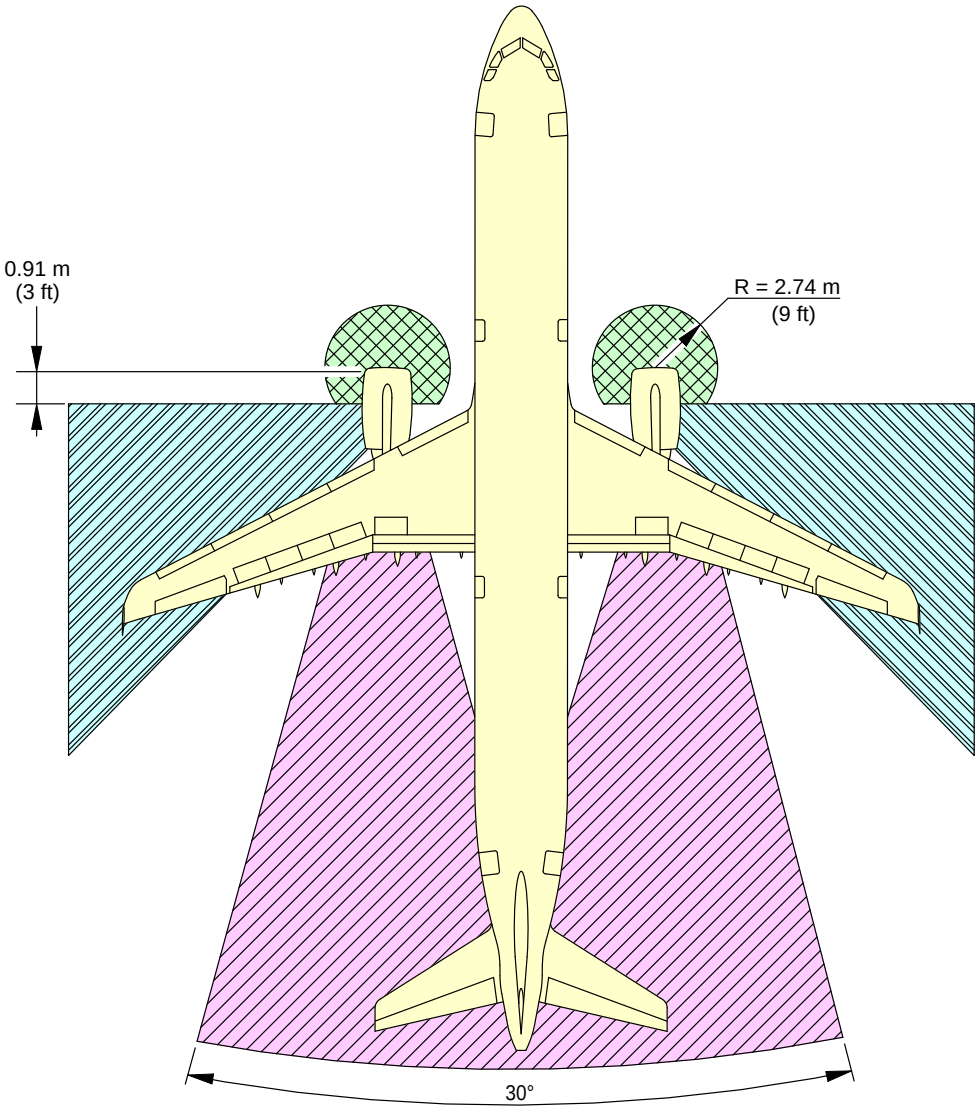

Danger Areas of the Engines
IAE V2500 Series Engine
FIGURE-6-3-1-991-010-A01

**ON A/C A321neo A321neo-XLR

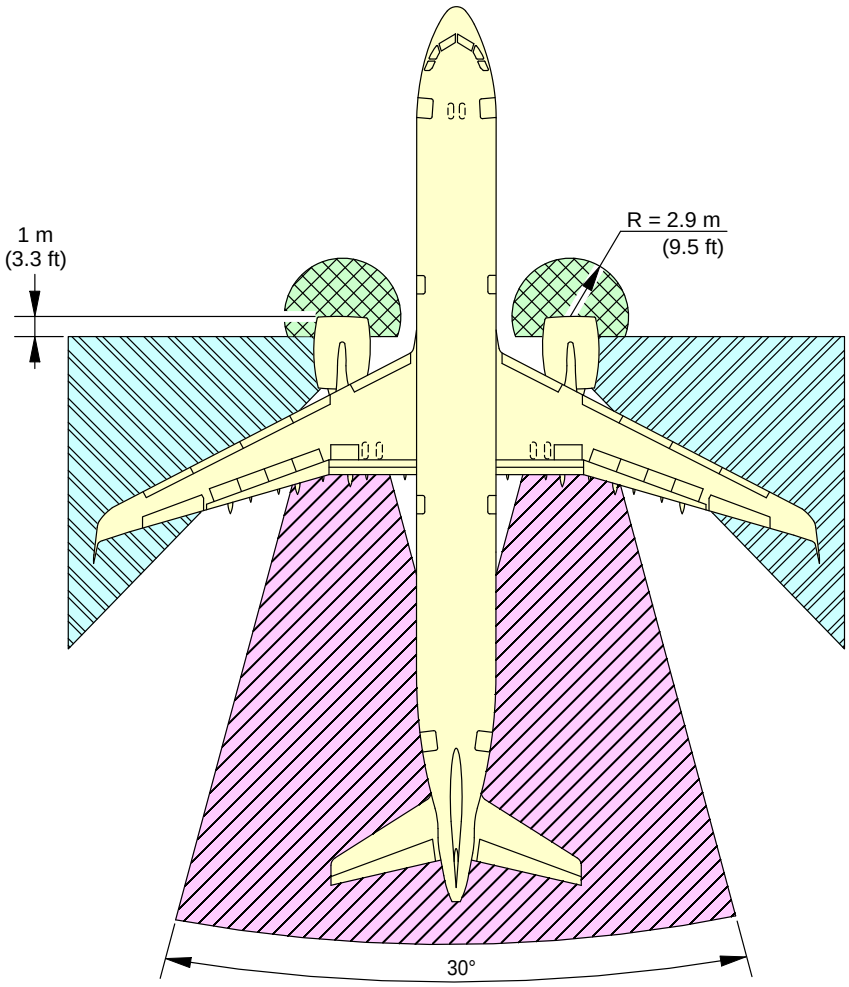

NOTE:

INTAKE SUCTION DANGER AREA MINIMUM IDLE POWER

ENTRY CORRIDOR

EXHAUST DANGER AREA

N_AC_060301_1_0150101_01_02

Danger Areas of the Engines
CFM LEAP-1A Engine
FIGURE-6-3-1-991-015-A01

**ON A/C A321neo A321neo-XLR

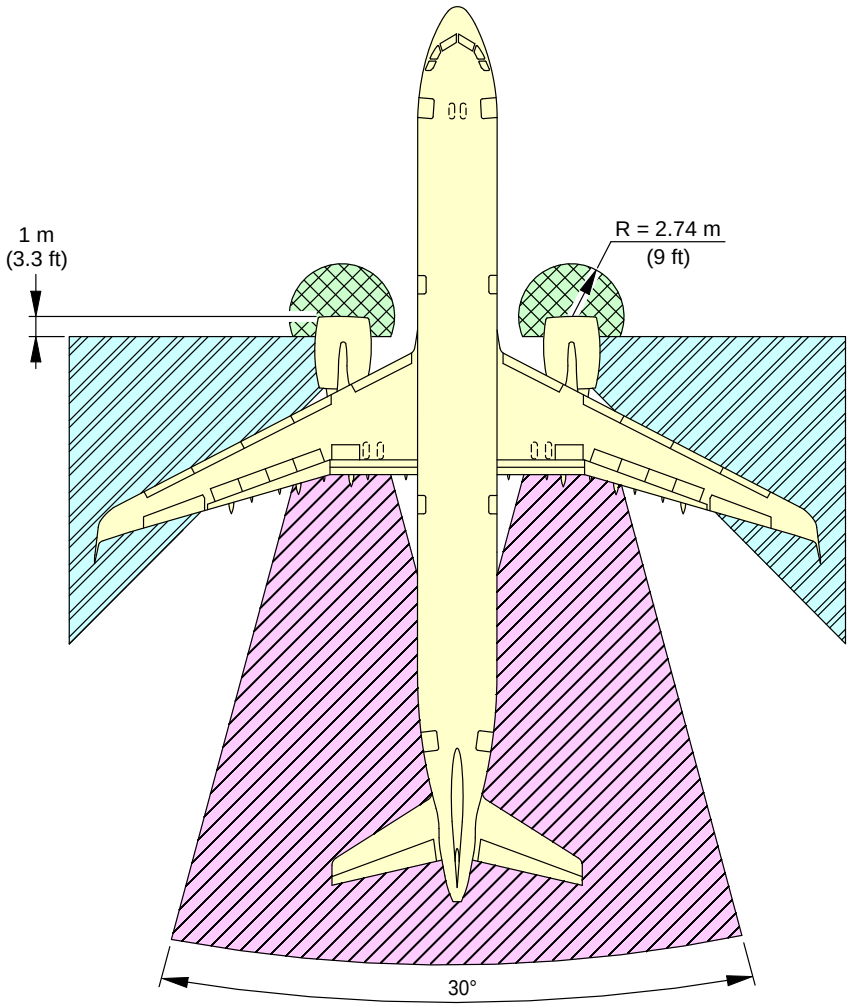

TO 40.3 m (132 ft) AFT OF COMMON NOZZLE ASSEMBLY (CNA)
INCLUDES CROSS WIND EFFECT

NOTE:

INTAKE SUCTION DANGER AREA MINIMUM IDLE POWER

ENTRY CORRIDOR

EXHAUST DANGER AREA

N_AC_060301_1_0160101_01_02

Danger Areas of the Engines
PW 1100G Engine
FIGURE-6-3-1-991-016-A01

6-3-2 Breakaway Power

****ON A/C A321-100 A321-200 A321neo A321neo-XLR**

Breakaway Power

1. This section provides danger areas of the engines at breakaway power.

****ON A/C A321-100 A321-200**

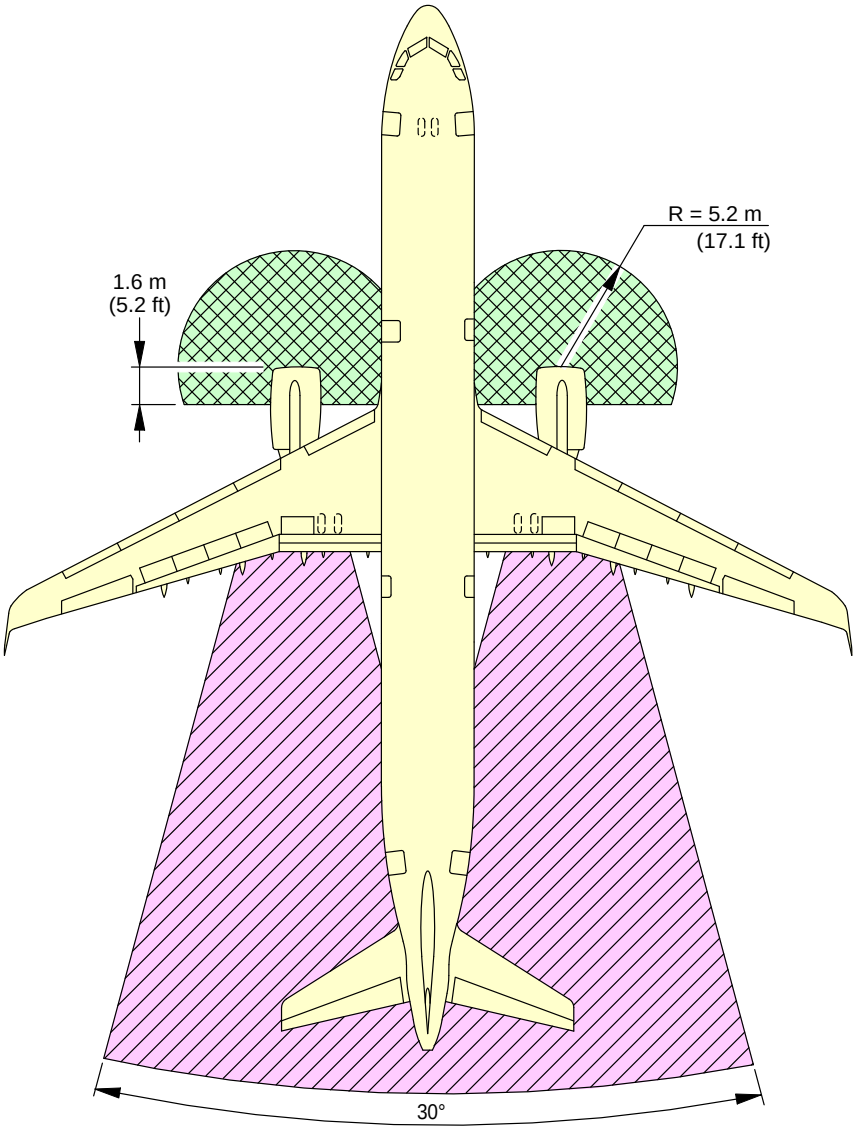

TO 74.7 m (245 ft) AFT OF COMMON NOZZLE ASSEMBLY (CNA) INCLUDES CROSS WIND EFFECT

NOTE:

INTAKE SUCTION DANGER AREA MAX. TAKEOFF POWER

EXHAUST WAKE DANGER AREA

N_AC_060302_1_0070101_01_03

Danger Areas of the Engines
CFM56-5B Series Engine
FIGURE-6-3-2-991-007-A01

****ON A/C A321-100 A321-200**

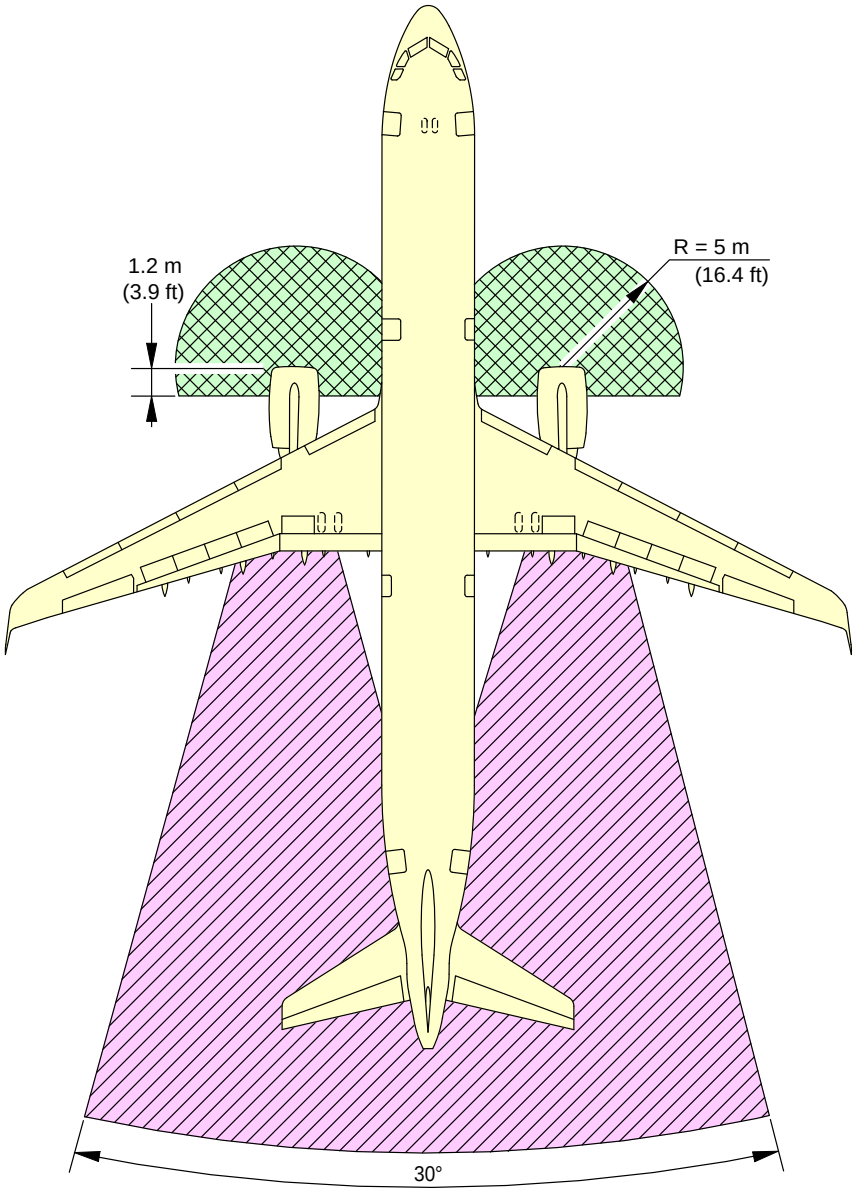

TO 91.4 m (300 ft) AFT OF COMMON NOZZLE ASSEMBLY (CNA)
INCLUDES CROSS WIND EFFECT

NOTE:

INTAKE SUCTION DANGER AREA MAX. TAKEOFF POWER

EXHAUST DANGER AREA

N_AC_060302_1_0080101_01_03

Danger Areas of the Engines
IAE V2500 Series Engine
FIGURE-6-3-2-991-008-A01

**ON A/C A321neo A321neo-XLR

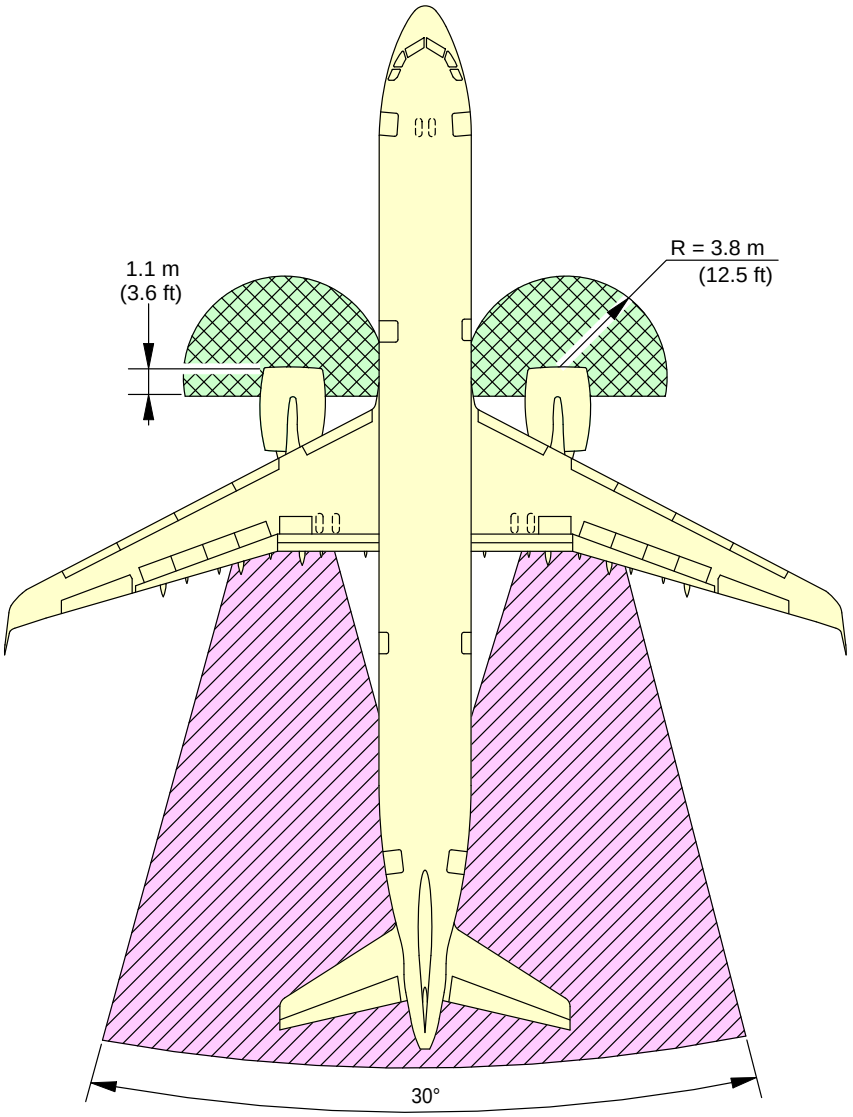

TO 63.5 m (208 ft) AFT OF COMMON NOZZLE ASSEMBLY (CNA)
INCLUDES CROSS WIND EFFECT

NOTE:

INTAKE SUCTION DANGER AREA MAX. TAKEOFF POWER

EXHAUST DANGER AREA

N_AC_060302_1_0130101_01_02

Danger Areas of the Engines
CFM LEAP-1A Engine
FIGURE-6-3-2-991-013-A01

**ON A/C A321neo A321neo-XLR

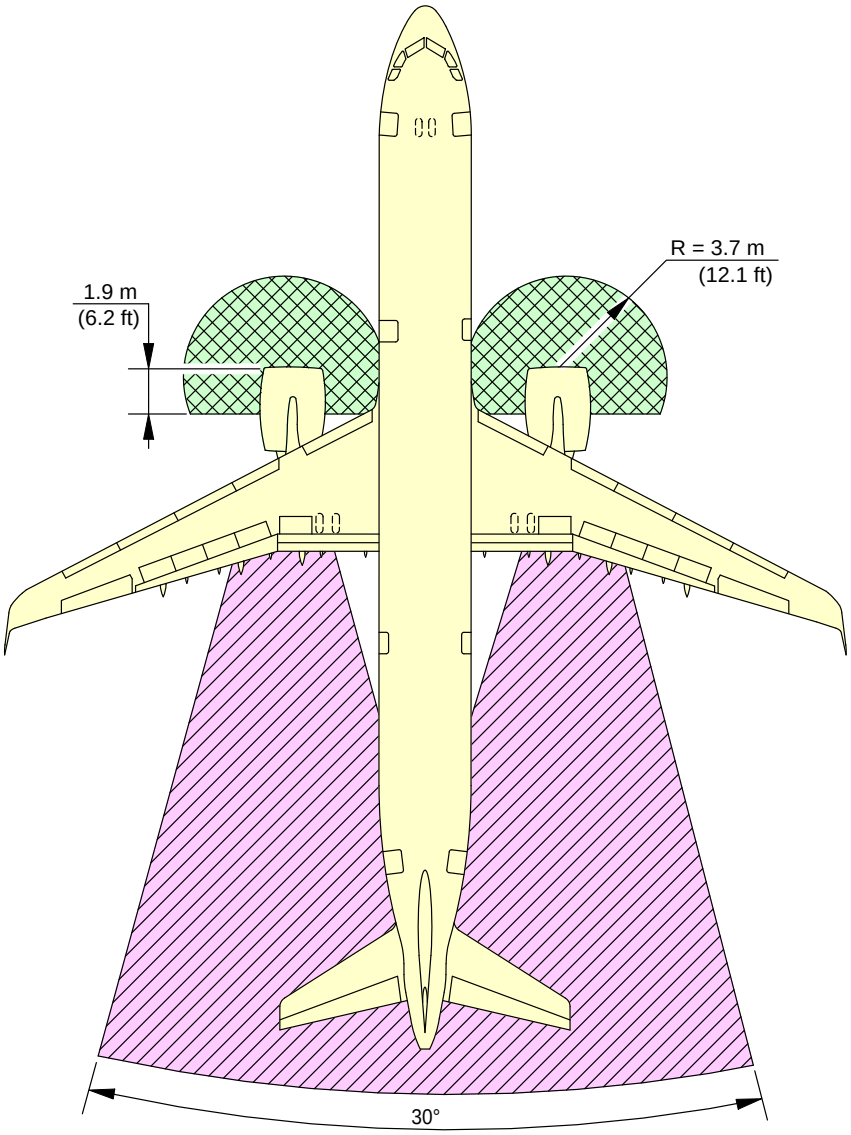

TO 71.6 m (235 ft) AFT OF COMMON NOZZLE ASSEMBLY (CNA)
INCLUDES CROSS WIND EFFECT

NOTE:

INTAKE SUCTION DANGER AREA MAX. TAKEOFF POWER

EXHAUST DANGER AREA

N_AC_060302_1_0140101_01_02

Danger Areas of the Engines
PW 1100G Engine
FIGURE-6-3-2-991-014-A01

6-3-3 Max Take Off Power

****ON A/C A321-100 A321-200 A321neo A321neo-XLR**

Take Off Power

****ON A/C A321-100 A321-200 A321neo**

1. This section provides danger areas of the engines at maximum take-off power conditions.

****ON A/C A321-100 A321-200**

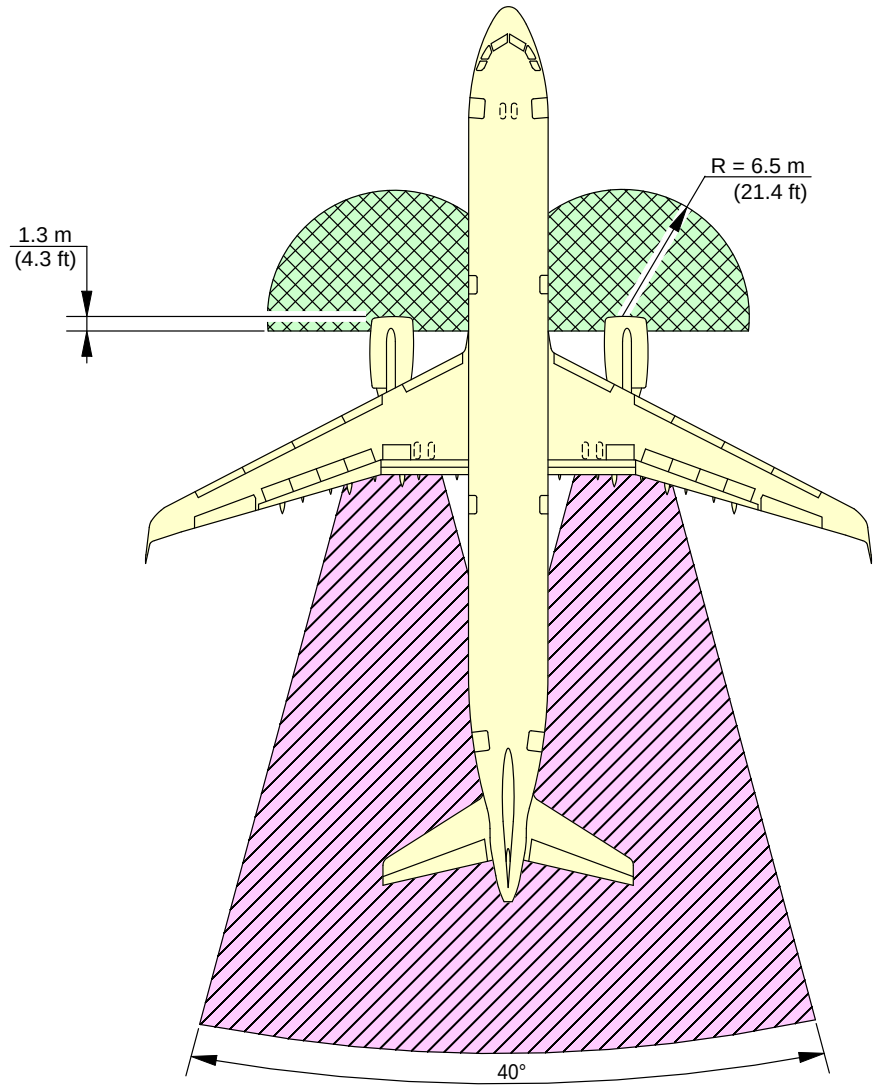

TO 275 m (900 ft) AFT OF COMMON NOZZLE ASSEMBLY (CNA) INCLUDES CROSS WIND EFFECT

NOTE:

INTAKE SUCTION DANGER AREA

EXHAUST WAKE DANGER

N_AC_060303_1_0110101_01_01

Danger Areas of the Engine
CFM56-5B Series Engine
FIGURE-6-3-3-991-011-A01

****ON A/C A321-100 A321-200**

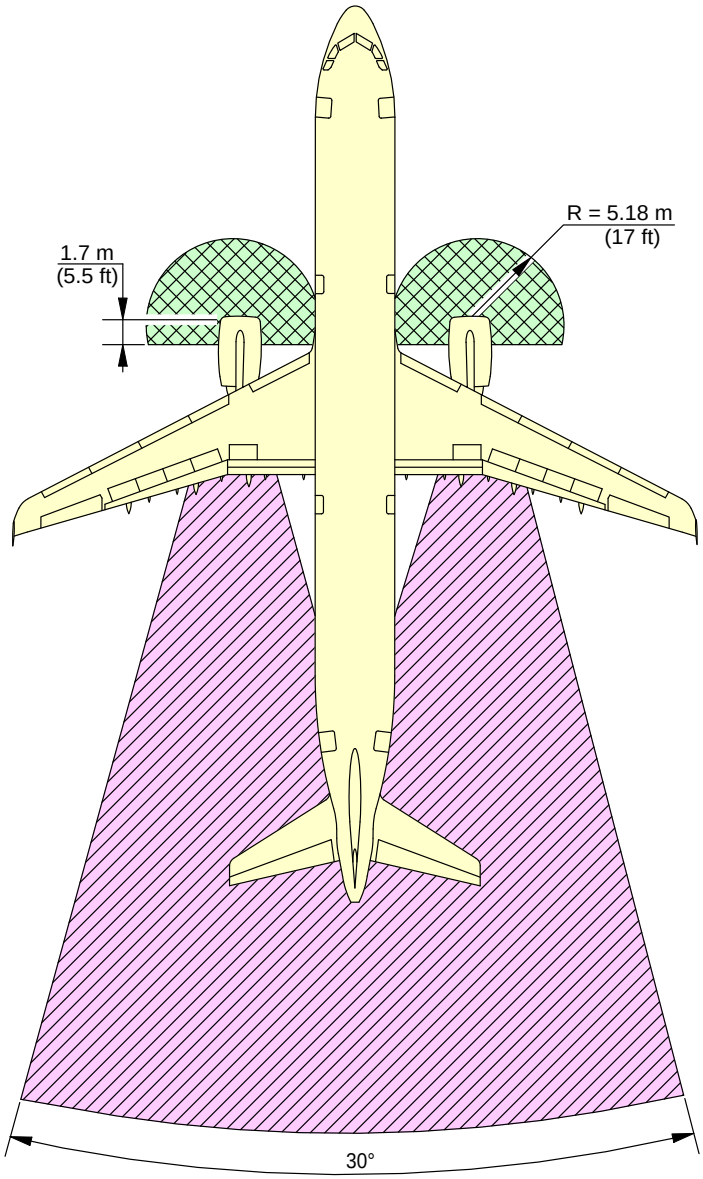

TO 348 m (1150 ft) AFT OF COMMON NOZZLE ASSEMBLY (CNA)
INCLUDES CROSS WIND EFFECT

NOTE:

INTAKE SUCTION DANGER AREA MAX. TAKEOFF POWER

EXHAUST DANGER AREA

N_AC_060303_1_0120101_01_01

Danger Areas of the Engine
IAE V2500 Series Engine
FIGURE-6-3-3-991-012-A01

**ON A/C A321neo A321neo-XLR

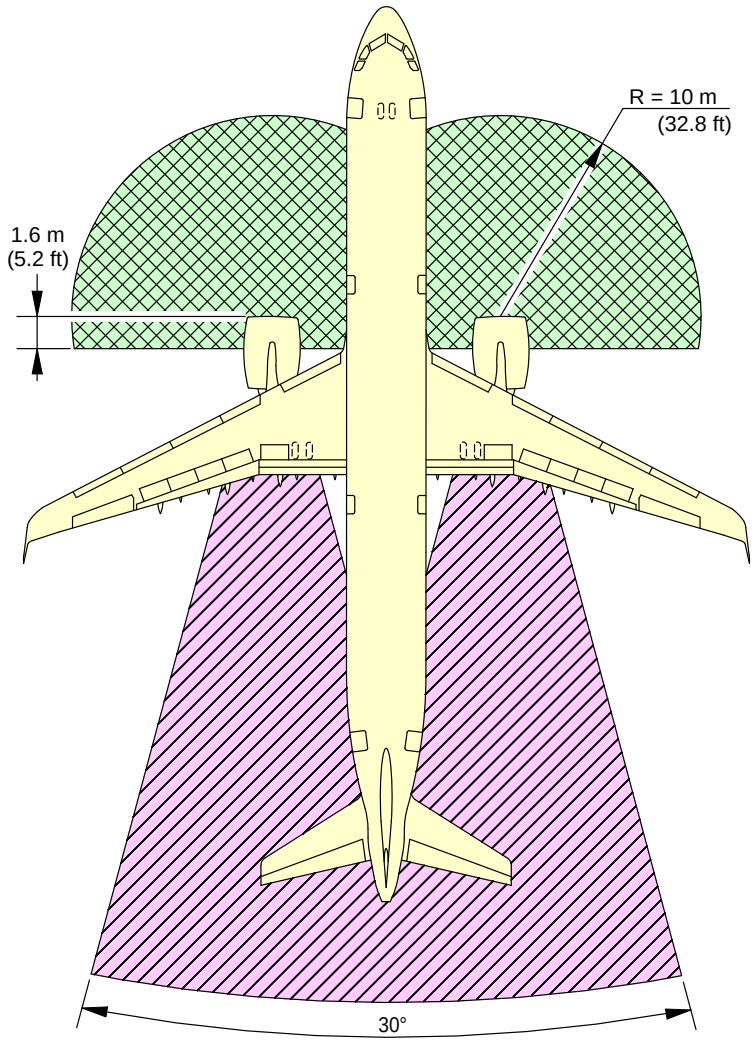

TO 220.7 m (724 ft) AFT OF COMMON NOZZLE ASSEMBLY (CNA)
INCLUDES CROSS WIND EFFECT

NOTE:

INTAKE SUCTION DANGER AREA MAX. TAKEOFF POWER

EXHAUST DANGER AREA

N_AC_060303_1_0130101_01_01

Danger Areas of the Engine
CFM LEAP-1A Engine
FIGURE-6-3-3-991-013-A01

**ON A/C A321neo A321neo-XLR

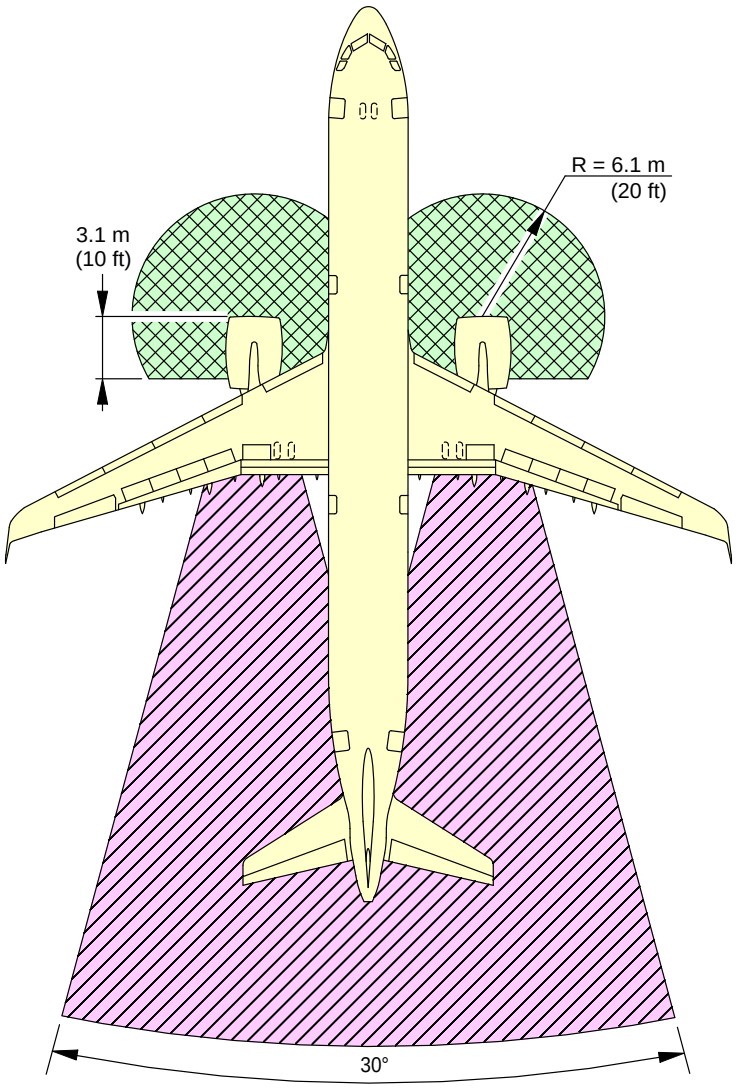

TO 243 m (797.4 ft) AFT OF COMMON NOZZLE ASSEMBLY (CNA) INCLUDES CROSS WIND EFFECT

NOTE:

INTAKE SUCTION DANGER AREA MAX. TAKEOFF POWER

EXHAUST DANGER AREA

N_AC_060303_1_0140101_01_01

Danger Areas of the Engine
PW 1100G Engine
FIGURE-6-3-3-991-014-A01

6-4-1 APU

****ON A/C A321-100 A321-200 A321neo A321neo-XLR**

APU - APIC & GARRETT

1. This section gives APU exhaust velocities and temperatures.

**ON A/C A321-100 A321-200 A321neo A321neo-XLR

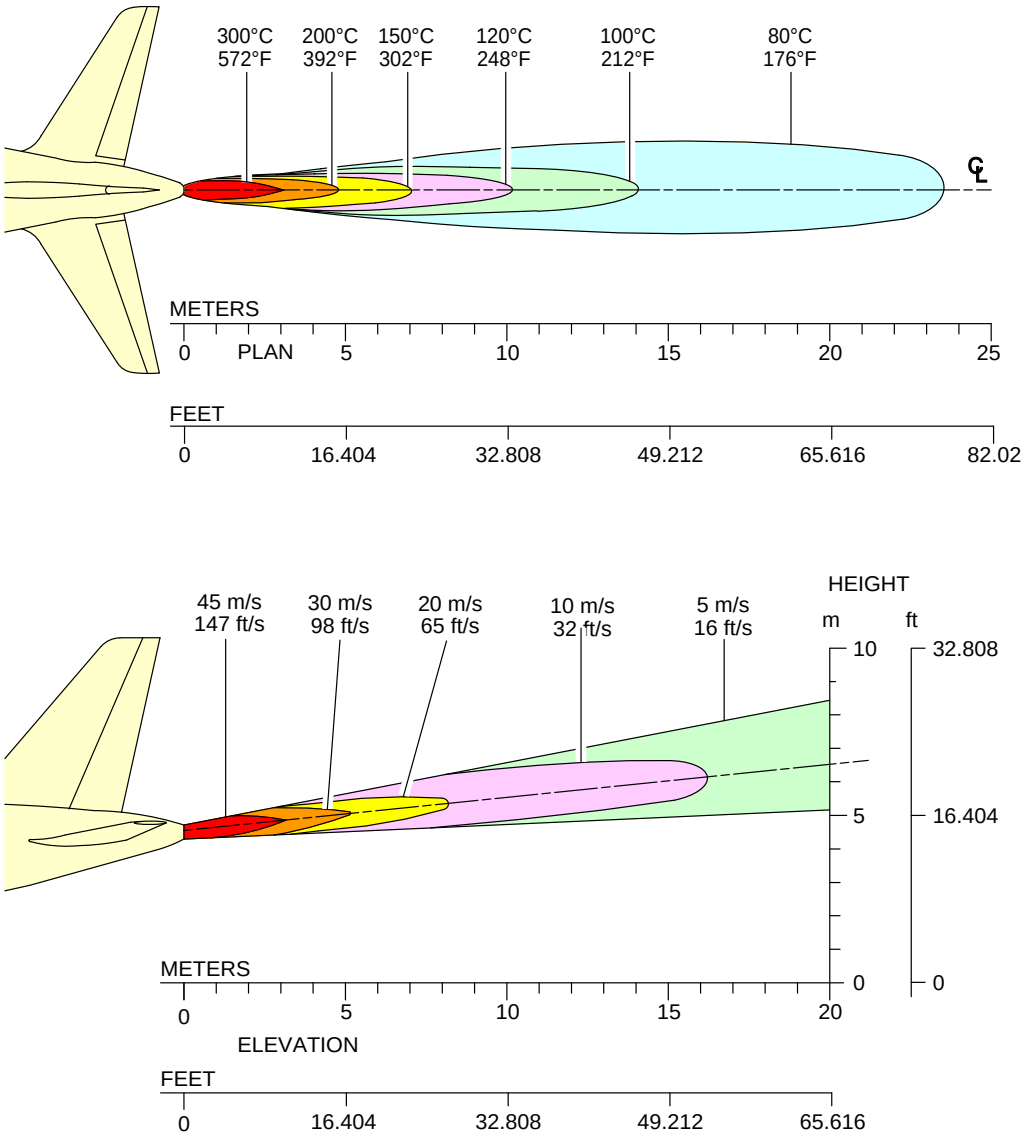

N_AC_060401_1_0040101_01_00

Exhaust Velocities and Temperatures
APU – APIC & GARRETT
FIGURE-6-4-1-991-004-A01

PAVEMENT DATA

7-1-0 General Information

****ON A/C A321-100 A321-200 A321neo A321neo-XLR**

General Information

1. A brief description of the pavement charts that follow will help in airport planning.

   To aid in the interpolation between the discrete values shown, each aircraft configuration is shown with a minimum range of five loads on the Main Landing Gear (MLG).

   All curves on the charts represent data at a constant specified tire pressure with:
   - The aircraft loaded to the Maximum Ramp Weight (MRW),
   - The CG at its maximum permissible aft position.

   Pavement requirements for commercial aircraft are derived from the static analysis of loads imposed on the MLG struts.

   Landing Gear Footprint:
   Section 07-02-00 presents basic data on the landing gear footprint configuration, MRW and tire sizes and pressures.

   Maximum Pavement Loads:
   Section 07-03-00 shows maximum vertical and horizontal pavement loads for certain critical conditions at the tire-ground interfaces.

   Landing Gear Loading on Pavement:
   The curves related to the landing gear loading on pavement are not given in section 07-04-00. Because the relationship between the aircraft weight, the center of gravity and the landing gear loading on the pavement is not strictly linear, it cannot be shown in chart format. But you can find in section 07-03-00 the maximum vertical and horizontal pavement loads for some critical conditions at the tire/ground interfaces for all the operational weight variants of the aircraft.
   For questions that are related to landing gear loading on pavement, contact Airbus.

   Flexible Pavement Requirements - US Army Corps of Engineers Design Method:

The flexible pavement requirements curves as per U.S. Army Corps of Engineers Design Method are not given in section 07-05-00 since the related data is available through free software.
Sections 07-02-00 and 07-03-00 give all the inputs data required for the use of such software.
For questions that are related to the flexible pavement requirements, contact Airbus.

Flexible Pavement Requirements - LCN Conversion Method:
The Load Classification Number (LCN) curves are not given in section 07-06-00 since the LCN system for reporting pavement strength is old and are replaced by the ICAO recommended ACN/PCN system in 1983 and ACR/PCR system in 2020.
For questions that are related to the LCN system, contact Airbus.

Rigid Pavement Requirements - PCA (Portland Cement Association) Design Method:
The rigid pavement requirements curves as per as Portland Cement Association Design Method are not given in section 07-07-00 since the related data is available through free software.
Sections 07-02-00 and 07-03-00 give all the inputs data required for the use of such software.
For questions that are related to the rigid pavement requirements, contact Airbus.

Rigid Pavement Requirements - LCN Conversion:
The Load Classification Number (LCN) curves are not given in section 07-08-00 since the LCN system for reporting pavement strength is old and are replaced by the ICAO recommended ACN/PCN system in 1983 and ACR/PCR system in 2020.
For questions that are related to the LCN system, contact Airbus.

ACN/PCN Reporting System:
Section 07-09-00 gives ACN data prepared according to the ACN/PCN system as referenced in ICAO Annex 14, ”Aerodromes”, Volume 1 ”Aerodrome Design and Operations”.
Eighth Edition July 2018, incorporating Amendments 1 to 14 and ICAO doc 9157, "Aerodrome Design Manual", part 3 "Pavements" Second Edition 1983.
The ACN/PCN system is applicable until November 2024.

ACN is the Aircraft Classification Number and PCN is the related Pavement Classification Number.

An aircraft with an ACN less than or equal to the PCN can operate without restriction on the pavement.

Numerically the ACN is two times the derived single-wheel load expressed in thousands of kilograms.
The derived single-wheel load is calculated as the load on a single tire inflated to 1.25 MPa (181 psi) that can have the same pavement requirements as the aircraft.
Computationally the ACN/PCN system uses PCA program PDILB for rigid pavements and S-77-1 for flexible pavements to calculate ACN values.

The airport authority must select the method of pavement analysis.
The results of their analysis should be reported using the following format:

PCN			
PAVEMENT TYPE	SUBGRADE CATEGORY	TIRE PRESSURE CATEGORY	EVALUATION METHOD
R – Rigid	A – High	W – No Pressure Limit	T – Technical
F – Flexible	B – Medium	X – High Pressure Limited to 1.75 MPa (254 psi)	U – Using Aircraft
	C – Low	Y – Medium Pressure Limited to 1.25 MPa (181 psi)	
	D – Ultra Low	Z – Low Pressure Limited to 0.5 MPa (73 psi)	

Section 07-09-00 shows the aircraft ACN values.

For flexible pavements, the four subgrade categories (CBR) are:

A. High Strength	CBR 15
B. Medium Strength	CBR 10
C. Low Strength	CBR 6
D. Ultra Low Strength	CBR 3

For rigid pavements, the four subgrade categories (k) are:

A. High Strength	k = 150 MN/m³ (550 pci)
B. Medium Strength	k = 80 MN/m³ (300 pci)
C. Low Strength	k = 40 MN/m³ (150 pci)
D. Ultra Low Strength	k = 20 MN/m³ (75 pci)

ACR/PCR Reporting System:
Section 07-10-00 gives ACR data prepared according to the ACR/PCR system as referenced in ICAO Annex 14, "Aerodromes", Volume 1 "Aerodrome Design and Operations".
Eight Edition July 2018, incorporating Amendments 1 to 15 and ICAO doc 9157, "Aerodrome Design Manual", part 3 "Pavements" Third Edition 2021.
The ACR/PCR system is effective from November 2020 and will be applicable in November 2024.

ACR is the Aircraft Classification Rating and PCR is the related Pavement Classification Rating.

An aircraft with an ACR less than or equal to the PCR can operate without restriction on the pavement.

Numerically the ACR is two times the derived single-wheel load expressed in hundreds of kilograms.

The derived single-wheel load is calculated as the load on a single tire inflated to 1.50 Mpa (218 psi) that can have the same pavement requirements as the aircraft.
Computationally the ACR/PCR system relies on the Linear Elastic Analysis (LEA). The ACR are computed with the official ICAO-ACR software.
States can start their own methods for PCR determination, which agree with the overall parameters of the ACR/PCR method.

The results of their analysis should be reported with the following format:

PCR			
PAVEMENT TYPE	SUBGRADE CATEGORY	TIRE PRESSURE CATEGORY	EVALUATION METHOD
R – Rigid	A – High	W – No Pressure Limit	T – Technical
F – Flexible	B – Medium	X – High Pressure Limited to 1.75 MPa (254 psi)	U – Using Aircraft
	C – Low	Y – Medium Pressure Limited to 1.25 MPa (181 psi)	
	D – Ultra Low	Z – Low Pressure Limited to 0.5 MPa (73 psi)	

Section 07-10-00 shows the aircraft ACR value.

For flexible and rigid pavement, the four subgrade categories are defined based on the subgrade modulus of elasticity (E):

A. High Strength — E = 200 Mpa (29 008 psi)
B. Medium Strength — E = 120 Mpa (17 405 psi)
C. Low Strength — E = 80 Mpa (11 603 psi)
D. Ultra Low Strength — E = 50 Mpa (7 252 psi)

7-2-0 Landing Gear Footprint

****ON A/C A321-100 A321-200 A321neo A321neo-XLR**

Landing Gear Footprint

1. This section gives data about the landing gear footprint in relation with the aircraft MRW and tire sizes and pressures.

   The landing-gear footprint information is given for all the operational weight variants of the aircraft.

****ON A/C A321-100**

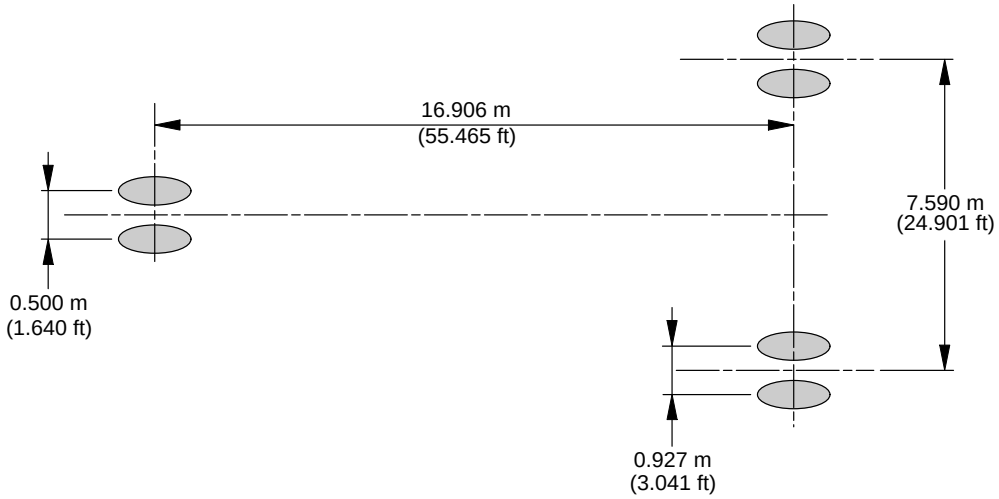

WEIGHT VARIANT	MAXIMUM RAMP WEIGHT	PERCENTAGE OF WEIGHT ON MAIN GEAR GROUP	NOSE GEAR TIRE SIZE	NOSE GEAR TIRE PRESSURE	MAIN GEAR TIRE SIZE	MAIN GEAR TIRE PRESSURE
A321-100 WV000	83 400 kg (183 875 lb)	95.7%	30x8.8R15 (30x8.8-15)	10.8 bar (157 psi)	1 270x455R22 (49x18-22)	13.6 bar (197 psi)
A321-100 WV002	83 400 kg (183 875 lb)	95.7%	30x8.8R15 (30x8.8-15)	10.8 bar (157 psi)	1 270x455R22 (49x18-22)	13.6 bar (197 psi)
A321-100 WV003	85 400 kg (188 275 lb)	95.7%	30x8.8R15 (30x8.8-15)	11 bar (160 psi)	1 270x455R22 (49x18-22)	13.9 bar (202 psi)
A321-100 WV004	78 400 kg (172 850 lb)	95.7%	30x8.8R15 (30x8.8-15)	10.1 bar (146 psi)	1 270x455R22 (49x18-22)	12.8 bar (186 psi)
A321-100 WV005	83 400 kg (183 875 lb)	95.7%	30x8.8R15 (30x8.8-15)	10.8 bar (157 psi)	1 270x455R22 (49x18-22)	13.6 bar (197 psi)
A321-100 WV006	78 400 kg (172 850 lb)	95.7%	30x8.8R15 (30x8.8-15)	10.1 bar (146 psi)	1 270x455R22 (49x18-22)	12.8 bar (186 psi)
A321-100 WV007	80 400 kg (177 250 lb)	95.7%	30x8.8R15 (30x8.8-15)	10.8 bar (157 psi)	1 270x455R22 (49x18-22)	13.6 bar (197 psi)
A321-100 WV008	89 400 kg (197 100 lb)	94.9%	30x8.8R15 (30x8.8-15)	11.6 bar (168 psi)	1 270x455R22 (49x18-22)	14.6 bar (212 psi)

N_AC_070200_1_0280101_01_01

Landing Gear Footprint
FIGURE-7-2-0-991-028-A01

****ON A/C A321-200**

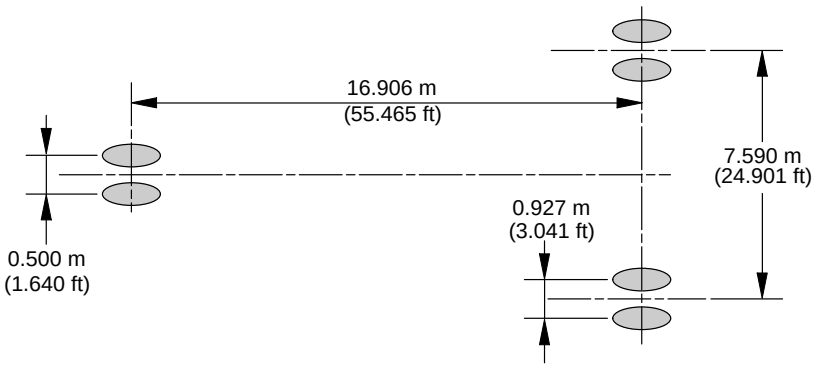

WEIGHT VARIANT	MAXIMUM RAMP WEIGHT	PERCENTAGE OF WEIGHT ON MAIN GEAR GROUP	NOSE GEAR TIRE SIZE	NOSE GEAR TIRE PRESSURE	MAIN GEAR TIRE SIZE	MAIN GEAR TIRE PRESSURE
A321-200 WV000	89 400 kg (197 100 lb)	95.5%	30x8.8R15 (30x8.8-15)	11.6 bar (168 psi)	1 270x455R22 (49x18-22)	14.6 bar (212 psi)
A321-200 WV001	93 400 kg (205 900 lb)	95.3%	30x8.8R15 (30x8.8-15)	11.6 bar (168 psi)	1 270x455R22 (49x18-22)	15 bar (218 psi)
A321-200 WV002	89 400 kg (197 100 lb)	95.5%	30x8.8R15 (30x8.8-15)	11.6 bar (168 psi)	1 270x455R22 (49x18-22)	14.6 bar (212 psi)
A321-200 WV003	91 400 kg (201 500 lb)	95.4%	30x8.8R15 (30x8.8-15)	11.6 bar (168 psi)	1 270x455R22 (49x18-22)	15 bar (218 psi)
A321-200 WV004	87 400 kg (192 675 lb)	95.7%	30x8.8R15 (30x8.8-15)	11.6 bar (168 psi)	1 270x455R22 (49x18-22)	14.6 bar (212 psi)
A321-200 WV005	85 400 kg (188 275 lb)	95.2%	30x8.8R15 (30x8.8-15)	11 bar (160 psi)	1 270x455R22 (49x18-22)	13.9 bar (202 psi)
A321-200 WV006	83 400 kg (183 875 lb)	95.4%	30x8.8R15 (30x8.8-15)	10.8 bar (157 psi)	1 270x455R22 (49x18-22)	13.6 bar (197 psi)
A321-200 WV007	83 400 kg (183 875 lb)	95.4%	30x8.8R15 (30x8.8-15)	10.8 bar (157 psi)	1 270x455R22 (49x18-22)	13.6 bar (197 psi)
A321-200 WV008 (CG 40.51%)	80 400 kg (177 250 lb)	95.6%	30x8.8R15 (30x8.8-15)	10.8 bar (157 psi)	1 270x455R22 (49x18-22)	13.6 bar (197 psi)
A321-200 WV008 (CG 39.71%)	80 400 kg (177 250 lb)	95.4%	30x8.8R15 (30x8.8-15)	10.8 bar (157 psi)	1 270x455R22 (49x18-22)	13.6 bar (197 psi)
A321-200 WV009 (CG 40.08%)	78 400 kg (172 850 lb)	95.5%	30x8.8R15 (30x8.8-15)	10.1 bar (146 psi)	1 270x455R22 (49x18-22)	12.8 bar (186 psi)
A321-200 WV009 (CG 39.21%)	78 400 kg (172 850 lb)	95.2%	30x8.8R15 (30x8.8-15)	10.1 bar (146 psi)	1 270x455R22 (49x18-22)	12.8 bar (186 psi)
A321-200 WV010	85 400 kg (188 275 lb)	95.2%	30x8.8R15 (30x8.8-15)	11 bar (160 psi)	1 270x455R22 (49x18-22)	13.9 bar (202 psi)
A321-200 WV011	93 900 kg (207 025 lb)	95.2%	30x8.8R15 (30x8.8-15)	11.6 bar (168 psi)	1 270x455R22 (49x18-22)	15 bar (218 psi)

N_AC_070200_1_0350101_01_02

Landing Gear Footprint
FIGURE-7-2-0-991-035-A01

**ON A/C A321neo

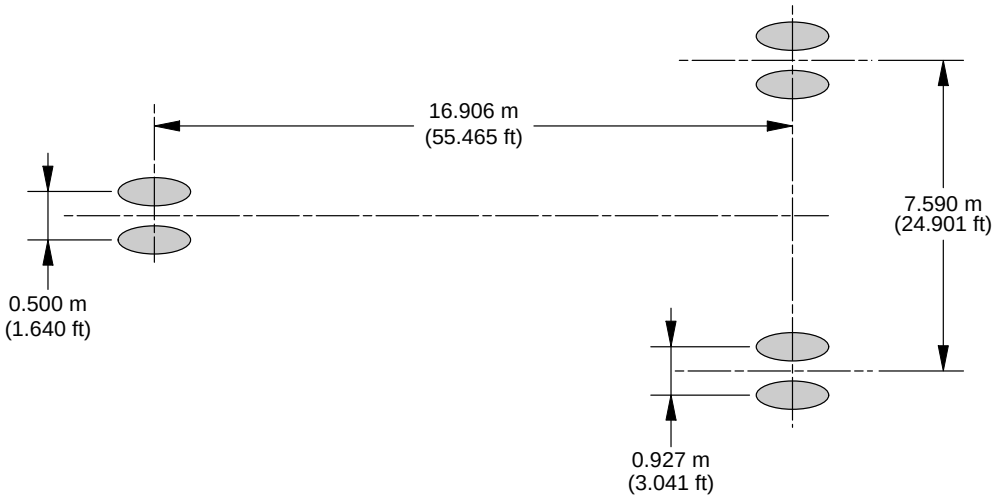

WEIGHT VARIANT	MAXIMUM RAMP WEIGHT	PERCENTAGE OF WEIGHT ON MAIN GEAR GROUP	NOSE GEAR TIRE SIZE	NOSE GEAR TIRE PRESSURE	WING GEAR TIRE SIZE	WING GEAR TIRE PRESSURE
A321NEO WV050 (CG 38.02%)	89 400 kg (197 100 lb)	95.5%	30x8.8R15	11.6 bar (168 psi)	1 270x455R22	14.6 bar (212 psi)
A321NEO WV050 (CG 37%)	89 400 kg (197 100 lb)	95.3%	30x8.8R15	11.6 bar (168 psi)	1 270x455R22	14.6 bar (212 psi)
A321NEO WV051 (CG 38.02%)	89 400 kg (197 100 lb)	95.5%	30x8.8R15	11.6 bar (168 psi)	1 270x455R22	14.6 bar (212 psi)
A321NEO WV051 (CG 37%)	89 400 kg (197 100 lb)	95.3%	30x8.8R15	11.6 bar (168 psi)	1 270x455R22	14.6 bar (212 psi)
A321NEO WV052 (CG 36.88%)	93 900 kg (207 025 lb)	95.2%	30x8.8R15	11.6 bar (168 psi)	1 270x455R22	15 bar (218 psi)
A321NEO WV053 (CG 36.88%)	93 900 kg (207 025 lb)	95.2%	30x8.8R15	11.6 bar (168 psi)	1 270x455R22	15 bar (218 psi)
A321NEO WV056 (CG 37.12%)	92 900 kg (204 800 lb)	95.3%	30x8.8R15	11.6 bar (168 psi)	1 270x455R22	15 bar (218 psi)
A321NEO WV056 (CG 37%)	92 900 kg (204 800 lb)	95.3%	30x8.8R15	11.6 bar (168 psi)	1 270x455R22	15 bar (218 psi)

N_AC_070200_1_0380101_01_07

Landing Gear Footprint
(Sheet 1 of 2)
FIGURE-7-2-0-991-038-A01

**ON A/C A321neo

WEIGHT VARIANT	MAXIMUM RAMP WEIGHT	PERCENTAGE OF WEIGHT ON MAIN GEAR GROUP	NOSE GEAR TIRE SIZE	NOSE GEAR TIRE PRESSURE	WING GEAR TIRE SIZE	WING GEAR TIRE PRESSURE
A321NEO WV057 (CG 37.12%)	92 900 kg (204 800lb)	95.3%	30x8.8R15	11.6 bar (168 psi)	1 270x455R22	15 bar (218 psi)
A321NEO WV057 (CG 37%)	92 900 kg (204 800lb)	95.3%	30x8.8R15	11.6 bar (168 psi)	1 270x455R22	15 bar (218 psi)
A321NEO WV059 (CG 37.25%)	92 400 kg (203 700 lb)	95.3%	30x8.8R15	11.6 bar (168 psi)	1 270x455R22	15 bar (218 psi)
A321NEO WV059 (CG 37%)	92 400 kg (203 700 lb)	95.3%	30x8.8R15	11.6 bar (168 psi)	1 270x455R22	15 bar (218 psi)
A321NEO WV063 (CG 37.5%)	91 400 kg (201 500 lb)	95.4%	30x8.8R15	11.6 bar (168 psi)	1 270x455R22	15 bar (218 psi)
A321NEO WV063 (CG 37%)	91 400 kg (201 500 lb)	95.3%	30x8.8R15	11.6 bar (168 psi)	1 270x455R22	15 bar (218 psi)
A321NEO WV065 (CG 37.62%)	90 900 kg (200 400 lb)	95.4%	30x8.8R15	11.6 bar (168 psi)	1 270x455R22	15 bar (218 psi)
A321NEO WV065 (CG 37%)	90 900 kg (200 400 lb)	95.3%	30x8.8R15	11.6 bar (168 psi)	1 270x455R22	15 bar (218 psi)
A321NEO WV067 (CG 37.76%)	90 400 kg (199 300 lb)	95.5%	30x8.8R15	11.6 bar (168 psi)	1 270x455R22	15 bar (218 psi)
A321NEO WV067 (CG 37%)	90 400 kg (199 300 lb)	95.3%	30x8.8R15	11.6 bar (168 psi)	1 270x455R22	15 bar (218 psi)
A321NEO WV070 (CG 38.71%)	80 400 kg (177 250 lb)	95.1%	30x8.8R15	10.8 bar (157 psi)	1 270x455R22	13.6 bar (197 psi)
A321NEO WV070 (CG 37%)	80 400 kg (177 250 lb)	94.7%	30x8.8R15	10.8 bar (157 psi)	1 270x455R22	13.6 bar (197 psi)
A321NEO WV071 (CG 36.07%)	97 400 kg (214 725 lb)	95.0%	30x8.8R15	11.6 bar (168 psi)	1 270x455R22	15.7 bar (228 psi)
A321NEO WV072 (CG 36.07%)	97 400 kg (214 725 lb)	95.0%	30x8.8R15	11.6 bar (168 psi)	1 270x455R22	15.7 bar (228 psi)
A321NEO WV079 (CG 36.53%)	95 400 kg (210 325 lb)	95.2%	30x8.8R15	11.6 bar (168 psi)	1 270x455R22	15.7 bar (228 psi)
A321NEO WV080 (CG 36.53%)	95 400 kg (210 325 lb)	95.2%	30x8.8R15	11.6 bar (168 psi)	1 270x455R22	15.7 bar (228 psi)

N_AC_070200_1_0380108_01_01

Landing Gear Footprint
(Sheet 2 of 2)
FIGURE-7-2-0-991-038-A01

****ON A/C A321neo-XLR**

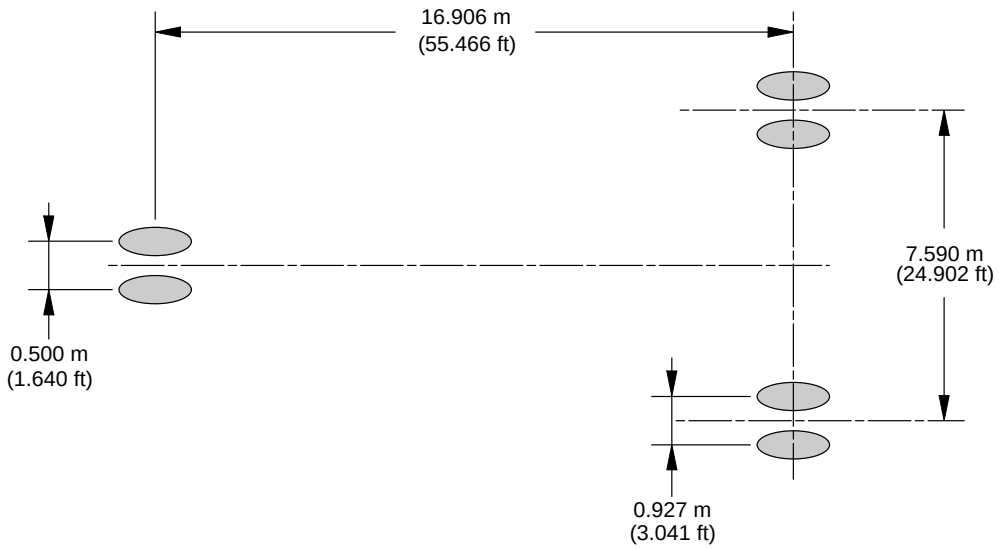

WEIGHT VARIANT	MAXIMUM RAMP WEIGHT	PERCENTAGE OF WEIGHT ON MAIN GEAR GROUP	NOSE GEAR TIRE SIZE	NOSE GEAR TIRE PRESSURE	MAIN GEAR TIRE SIZE	MAIN GEAR TIRE PRESSURE
A321NEO XLR WV072 (CG 36%)	97 400 kg (214 725 lb)	95.0%	30x8.8R15	11.6 bar (168 psi)	1 270x455R22	15.7 bar (228 psi)
A321NEO XLR WV100	101 400 kg (223 550 lb)	94.8%	30x8.8R15	12.2 bar (177 psi)	1 270x455R22	16.2 bar (235 psi)

N_AC_070200_1_0390101_01_02

Landing Gear Footprint
FIGURE-7-2-0-991-039-A01

7-3-0 Maximum Pavement Loads

****ON A/C A321-100 A321-200 A321neo A321neo-XLR**

Maximum Pavement Loads

1. This section gives maximum vertical and horizontal pavement loads for some critical conditions at the tire-ground interfaces.

   The maximum pavement loads are given for all the operational weight variants of the aircraft.

****ON A/C A321-100**

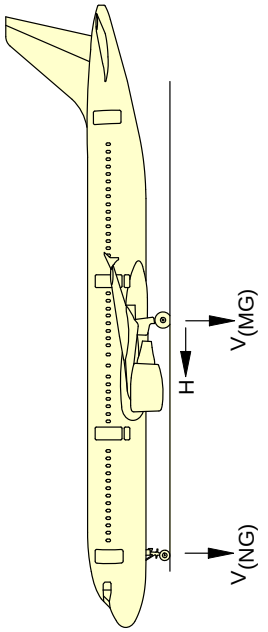

$V_{(NG)}$ MAXIMUM VERTICAL NOSE GEAR GROUND LOAD AT FWD CG
$V_{(MG)}$ MAXIMUM VERTICAL MAIN GEAR GROUND LOAD AT AFT CG
H MAXIMUM HORIZONTAL GROUND LOAD FROM BRAKING

1	2	3		4	5		6	
		$V_{(NG)}$			$V_{(MG)}$ (PER STRUT)		H (PER STRUT)	
WEIGHT VARIANT	MAXIMUM RAMP WEIGHT	STATIC LOAD AT FWD CG		STATIC BRAKING AT 10 ft/s² DECELERATION	STATIC LOAD AT AFT CG		STEADY BRAKING AT 10 ft/s² DECELERATION	AT INSTANTANEOUS BRAKING COEFFICIENT = 0.8
A321-100 WV000	83 400 kg (183 875 lb)	8 570 kg (18 900 lb)	17.5% MAC (a)	13 730 kg (30 275 lb)	39 910 kg (87 975 lb)	41% MAC (a)	12 960 kg (28 575 lb) (b)	31 920 kg (70 375 lb) (b)
A321-100 WV002	83 400 kg (183 875 lb)	8 570 kg (18 900 lb)	17.5% MAC (a)	13 730 kg (30 275 lb)	39 910 kg (87 975 lb)	41% MAC (a)	12 960 kg (28 575 lb) (b)	31 920 kg (70 375 lb) (b)
A321-100 WV003	85 400 kg (188 275 lb)	8 600 kg (18 950 lb)	18.3% MAC (a)	13 880 kg (30 600 lb)	40 860 kg (90 100 lb)	41% MAC (a)	13 270 kg (29 250 lb) (b)	32 690 kg (72 075 lb) (b)
A321-100 WV004	78 400 kg (172 850 lb)	8 480 kg (18 675 lb)	15.4% MAC (a)	13 340 kg (29 425 lb)	37 510 kg (82 700 lb)	41% MAC (a)	12 180 kg (26 850 lb) (b)	30 010 kg (66 150 lb) (b)
A321-100 WV005	83 400 kg (183 875 lb)	8 570 kg (18 900 lb)	17.5% MAC (a)	13 730 kg (30 275 lb)	39 910 kg (87 975 lb)	41% MAC (a)	12 960 kg (28 575 lb) (b)	31 920 kg (70 375 lb) (b)
A321-100 WV006	78 400 kg (172 850 lb)	8 480 kg (18 675 lb)	15.4% MAC (a)	13 340 kg (29 425 lb)	37 510 kg (82 700 lb)	41% MAC (a)	12 180 kg (26 850 lb) (b)	30 010 kg (66 150 lb) (b)
A321-100 WV007	80 400 kg (177 250 lb)	8 510 kg (18 750 lb)	16.3% MAC (a)	13 490 kg (29 750 lb)	38 470 kg (84 800 lb)	41% MAC (a)	12 490 kg (27 550 lb) (b)	30 770 kg (67 850 lb) (b)
A321-100 WV008	89 400 kg (197 100 lb)	9 180 kg (20 225 lb)	17.5% MAC (a)	14 690 kg (32 375 lb)	42 430 kg (93 550 lb)	38% MAC (a)	13 890 kg (30 625 lb) (b)	33 950 kg (74 825 lb) (b)

NOTE:
(a) LOADS CALCULATED USING AIRCRAFT AT MRW.
(b) BRAKED MAIN GEAR.

N_AC_070300_1_0330101_01_03

Maximum Pavement Loads for A321-100
FIGURE-7-3-0-991-033-A01

****ON A/C A321-200**

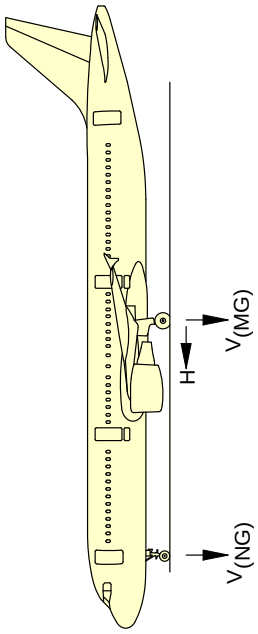

$V_{(NG)}$ MAXIMUM VERTICAL NOSE GEAR GROUND LOAD AT FWD CG
$V_{(MG)}$ MAXIMUM VERTICAL MAIN GEAR GROUND LOAD AT AFT CG
H MAXIMUM HORIZONTAL GROUND LOAD FROM BRAKING

1	2	3		4	5		6	
		$V_{(NG)}$			$V_{(MG)}$ (PER STRUT)		H (PER STRUT)	
WEIGHT VARIANT	MAXIMUM RAMP WEIGHT	STATIC LOAD AT FWD CG		STATIC BRAKING AT 10 ft/s² DECELERATION	STATIC LOAD AT AFT CG		STEADY BRAKING AT 10 ft/s² DECELERATION	AT INSTANTANEOUS BRAKING COEFFICIENT = 0.8
A321-200 WV000	89 400 kg (197 100 lb)	8 680 kg (19 150 lb)	17.5% MAC (a)	14 190 kg (31 275 lb)	42 700 kg (94 150 lb)	38% MAC (a)	13 890 kg (30 625 lb) (c)	34 160 kg (75 325 lb) (c)
A321-200 WV001	93 400 kg (205 900 lb)	8 640 kg (19 050 lb)	17.5% MAC (b)	14 110 kg (31 100 lb)	44 490 kg (98 100 lb)	37% MAC (a)	14 510 kg (32 000 lb) (c)	35 590 kg (78 475 lb) (c)
A321-200 WV002	89 400 kg (197 100 lb)	8 680 kg (19 150 lb)	17.5% MAC (a)	14 190 kg (31 275 lb)	42 700 kg (94 150 lb)	38% MAC (a)	13 890 kg (30 625 lb) (c)	34 160 kg (75 325 lb) (c)
A321-200 WV003	91 400 kg (201 500 lb)	8 640 kg (19 050 lb)	17.5% MAC (b)	14 120 kg (31 125 lb)	43 600 kg (96 125 lb)	37.49% MAC (a)	14 200 kg (31 325 lb) (c)	34 880 kg (76 900 lb) (c)
A321-200 WV004	87 400 kg (192 675 lb)	8 490 kg (18 725 lb)	17.5% MAC (a)	13 880 kg (30 600 lb)	41 810 kg (92 175 lb)	38.53% MAC (a)	13 580 kg (29 950 lb) (c)	33 440 kg (73 725 lb) (c)

NOTE:
(a) LOADS CALCULATED USING AIRCRAFT AT MRW.
(b) LOADS CALCULATED USING AIRCRAFT AT 89 000 kg (196 200 lb).
(c) BRAKED MAIN GEAR.

N_AC_070300_1_0440101_01_02

Maximum Pavement Loads for A321-200
(Sheet 1 of 2)
FIGURE-7-3-0-991-044-A01

****ON A/C A321-200**

1	2	3		4	5		6	
		$V_{(NG)}$			$V_{(MG)}$ (PER STRUT)		H (PER STRUT)	
WEIGHT VARIANT	MAXIMUM RAMP WEIGHT	STATIC LOAD AT FWD CG		STATIC BRAKING AT 10 ft/s² DECELERATION	STATIC LOAD AT AFT CG		STEADY BRAKING AT 10 ft/s² DECELERATION	AT INSTANTANEOUS BRAKING COEFFICIENT = 0.8
A321-200 WV005	85 400 kg (188 275 lb)	8 760 kg (19 325 lb)	17.5% MAC (a)	14 030 kg (30 925 lb)	40 660 kg (89 625 lb)	39.1% MAC (a)	13 270 kg (c) (29 250 lb)	32 530 kg (c) (71 700 lb)
A321-200 WV006	83 400 kg (183 875 lb)	8 560 kg (18 875 lb)	17.5% MAC (a)	13 710 kg (30 225 lb)	39 770 kg (87 675 lb)	39.7% MAC (a)	12 960 kg (c) (28 575 lb)	31 820 kg (c) (70 150 lb)
A321-200 WV007	83 400 kg (183 875 lb)	8 560 kg (18 875 lb)	17.5% MAC (a)	13 710 kg (30 225 lb)	39 770 kg (87 675 lb)	39.7% MAC (a)	12 960 kg (c) (28 575 lb)	31 820 kg (c) (70 150 lb)
A321-200 WV008 (CG 40.51%)	80 400 kg (177 250 lb)	8 510 kg (18 750 lb)	16.28% MAC (a)	13 480 kg (29 725 lb)	38 420 kg (84 700 lb)	40.51% MAC (a)	12 490 kg (c) (27 550 lb)	30 740 kg (c) (67 750 lb)
A321-200 WV008 (CG 39.71%)	80 400 kg (177 250 lb)	8 510 kg (18 750 lb)	16.28% MAC (a)	13 480 kg (29 725 lb)	38 340 kg (84 525 lb)	39.71% MAC (a)	12 490 kg (c) (27 550 lb)	30 670 kg (c) (67 625 lb)
A321-200 WV009 (CG 40.08%)	78 400 kg (172 850 lb)	8 470 kg (18 675 lb)	15.41% MAC (a)	13 330 kg (29 375 lb)	37 420 kg (82 500 lb)	40.08% MAC (a)	12 180 kg (c) (26 850 lb)	29 940 kg (c) (66 000 lb)
A321-200 WV009 (CG 39.21%)	78 400 kg (172 850 lb)	8 470 kg (18 675 lb)	15.41% MAC (a)	13 330 kg (29 375 lb)	37 330 kg (82 300 lb)	39.21% MAC (a)	12 180 kg (c) (26 850 lb)	29 870 kg (c) (65 850 lb)
A321-200 WV010	85 400 kg (188 275 lb)	8 760 kg (19 325 lb)	17.5% MAC (a)	14 030 kg (30 925 lb)	40 660 kg (89 625 lb)	39.1% MAC (a)	13 270 kg (c) (29 250 lb)	32 530 kg (c) (71 700 lb)
A321-200 WV011	93 900 kg (207 025 lb)	8 640 kg (19 050 lb)	17.5% MAC (b)	14 110 kg (31 125 lb)	44 720 kg (98 575 lb)	36.88% MAC (a)	14 590 kg (c) (32 175 lb)	35 770 kg (c) (78 875 lb)

NOTE:
(a) LOADS CALCULATED USING AIRCRAFT AT MRW.
(b) LOADS CALCULATED USING AIRCRAFT AT 89 000 kg (196 200 lb).
(c) BRAKED MAIN GEAR.

N_AC_070300_1_0440102_01_04

Maximum Pavement Loads for A321-200
(Sheet 2 of 2)
FIGURE-7-3-0-991-044-A01

****ON A/C A321neo**

$V_{(NG)}$ MAXIMUM VERTICAL NOSE GEAR GROUND LOAD AT FORWARD CG
$V_{(MG)}$ MAXIMUM VERTICAL MAIN GEAR GROUND LOAD AT AFT CG
H MAXIMUM HORIZONTAL GROUND LOAD FROM BRAKING

1	2	3		4	5		6	
		$V_{(NG)}$			$V_{(MG)}$ (PER STRUT)		H (PER STRUT)	
WEIGHT VARIANT	MAXIMUM RAMP WEIGHT	STATIC LOAD AT FORWARD CG		STATIC BRAKING AT 10 ft/s² DECELERATION	STATIC LOAD AT AFT CG		STEADY BRAKING AT 10 ft/s² DECELERATION	AT INSTANTANEOUS BRAKING COEFFICIENT = 0.8
A321NEO WV050 (CG 38.02%)	89 400 kg (197 100 lb)	8 680 kg (19 150 lb)	17.5% MAC (a)	14 190 kg (31 275 lb)	42 700 kg (94 150 lb)	38.02% MAC (a)	13 890 kg (30 625 lb) (c)	34 160 kg (75 325 lb) (c)
A321NEO WV050 (CG 37%)	89 400 kg (197 100 lb)	8 680 kg (19 150 lb)	17.5% MAC (a)	14 190 kg (31 275 lb)	42 580 kg (93 875 lb)	37% MAC (a)	13 890 kg (30 625 lb) (c)	34 070 kg (75 100 lb) (c)
A321NEO WV051 (CG 38.02%)	89 400 kg (197 100 lb)	8 680 kg (19 150 lb)	17.5% MAC (a)	14 190 kg (31 275 lb)	42 700 kg (94 150 lb)	38.02% MAC (a)	13 890 kg (30 625 lb) (c)	34 160 kg (75 325 lb) (c)
A321NEO WV051 (CG 37%)	89 400 kg (197 100 lb)	8 680 kg (19 150 lb)	17.5% MAC (a)	14 190 kg (31 275 lb)	42 580 kg (93 875 lb)	37% MAC (a)	13 890 kg (30 625 lb) (c)	34 070 kg (75 100 lb) (c)
A321NEO WV052 (CG 36.88%)	93 900 kg (207 025 lb)	8 640 kg (19 050 lb)	17.5% MAC (b)	14 110 kg (31 100 lb)	44 720 kg (98 575 lb)	36.88% MAC (a)	14 590 kg (32 175 lb) (c)	35 770 kg (78 875 lb) (c)
A321NEO WV053 (CG 36.88%)	93 900 kg (207 025 lb)	8 640 kg (19 050 lb)	17.5% MAC (b)	14 110 kg (31 100 lb)	44 720 kg (98 575 lb)	36.88% MAC (a)	14 590 kg (32 175 lb) (c)	35 770 kg (78 875 lb) (c)

NOTE:
(a) LOADS CALCULATED USING AIRCRAFT AT MRW.
(b) LOADS CALCULATED USING AIRCRAFT AT 89 000 kg (196 200 lb).
(c) BRAKED MAIN GEAR.

N_AC_070300_1_0470101_01_02

Maximum Pavement Loads for A321NEO
(Sheet 1 of 3)
FIGURE-7-3-0-991-047-A01

****ON A/C A321neo**

1	2	3		4	5		6	
		$V_{(NG)}$			$V_{(MG)}$ (PER STRUT)		H (PER STRUT)	
WEIGHT VARIANT	MAXIMUM RAMP WEIGHT	STATIC LOAD AT FORWARD CG		STATIC BRAKING AT 10 ft/s² DECELERATION	STATIC LOAD AT AFT CG		STEADY BRAKING AT 10 ft/s² DECELERATION	AT INSTANTANEOUS BRAKING COEFFICIENT = 0.8
A321NEO WV056 (CG 37.12%)	92 900 kg (204 800 lb)	8 640 kg (19 050 lb)	17.5% MAC (b)	14 110 kg (31 100 lb)	44 270 kg (97 600 lb)	37.12% MAC (a)	14 440 kg (31 825 lb) (c)	35 420 kg (78 075 lb) (c)
A321NEO WV056 (CG 37%)	92 900 kg (204 800 lb)	8 640 kg (19 050 lb)	17.5% MAC (b)	14 110 kg (31 100 lb)	44 250 kg (97 575 lb)	37% MAC (a)	14 440 kg (31 825 lb) (c)	35 400 kg (78 050 lb) (c)
A321NEO WV057 (CG 37.12%)	92 900 kg (204 800 lb)	8 640 kg (19 050 lb)	17.5% MAC (b)	14 110 kg (31 100 lb)	44 270 kg (97 600 lb)	37.12% MAC (a)	14 440 kg (31 825 lb) (c)	35 420 kg (78 075 lb) (c)
A321NEO WV057 (CG 37%)	92 900 kg (204 800 lb)	8 640 kg (19 050 lb)	17.5% MAC (b)	14 110 kg (31 100 lb)	44 250 kg (97 575 lb)	37% MAC (a)	14 440 kg (31 825 lb) (c)	35 400 kg (78 050 lb) (c)
A321NEO WV059 (CG 37.25%)	92 400 kg (203 700 lb)	8 640 kg (19 050 lb)	17.5% MAC (b)	14 110 kg (31 125 lb)	44 050 kg (97 100 lb)	37.25% MAC (a)	14 360 kg (31 650 lb) (c)	35 240 kg (77 675 lb) (c)
A321NEO WV059 (CG 37%)	92 400 kg (203 700 lb)	8 640 kg (19 050 lb)	17.5% MAC (b)	14 110 kg (31 125 lb)	44 020 kg (97 050 lb)	37% MAC (a)	14 360 kg (31 650 lb) (c)	35 210 kg (77 625 lb) (c)
A321NEO WV063 (CG 37.5%)	91 400 kg (201 500 lb)	8 640 kg (19 050 lb)	17.5% MAC (b)	14 120 kg (31 125 lb)	43 610 kg (96 125 lb)	37.5% MAC (a)	14 200 kg (31 325 lb) (c)	34 880 kg (76 900 lb) (c)
A321NEO WV063 (CG 37%)	91 400 kg (201 500 lb)	8 640 kg (19 050 lb)	17.5% MAC (b)	14 120 kg (31 125 lb)	43 550 kg (96 025 lb)	37% MAC (a)	14 200 kg (31 325 lb) (c)	34 840 kg (76 825 lb) (c)
A321NEO WV065 (CG 37.62%)	90 900 kg (200 400 lb)	8 640 kg (19 050 lb)	17.5% MAC (b)	14 120 kg (31 125 lb)	43 380 kg (95 625 lb)	37.62% MAC (a)	14 130 kg (31 150 lb) (c)	34 700 kg (76 500 lb) (c)
A321NEO WV065 (CG 37%)	90 900 kg (200 400 lb)	8 640 kg (19 050 lb)	17.5% MAC (b)	14 120 kg (31 125 lb)	43 320 kg (95 500 lb)	37% MAC (a)	14 130 kg (31 150 lb) (c)	34 650 kg (76 400 lb) (c)

NOTE:
(a) LOADS CALCULATED USING AIRCRAFT AT MRW.
(b) LOADS CALCULATED USING AIRCRAFT AT 89 000 kg (196 200 lb).
(c) BRAKED MAIN GEAR.

N_AC_070300_1_0470102_01_03

Maximum Pavement Loads for A321NEO
(Sheet 2 of 3)
FIGURE-7-3-0-991-047-A01

****ON A/C A321neo**

1	2	3		4	5		6	
		$V_{(NG)}$			$V_{(MG)}$ (PER STRUT)		H (PER STRUT)	
WEIGHT VARIANT	MAXIMUM RAMP WEIGHT	STATIC LOAD AT FORWARD CG		STATIC BRAKING AT 10 ft/s² DECELERATION	STATIC LOAD AT AFT CG		STEADY BRAKING AT 10 ft/s² DECELERATION	AT INSTANTANEOUS BRAKING COEFFICIENT = 0.8
A321NEO WV067 (CG 37.76%)	90 400 kg (199 300 lb)	8 640 kg (19 050 lb)	17.5% MAC (b)	14 120 kg (31 125 lb)	43 150 kg (95 150 lb)	37.76% MAC (a)	14 050 kg (30 975 lb) (c)	34 520 kg (76 100 lb) (c)
A321NEO WV067 (CG 37%)	90 400 kg (199 300 lb)	8 640 kg (19 050 lb)	17.5% MAC (b)	14 120 kg (31 125 lb)	43 070 kg (94 950 lb)	37% MAC (a)	14 050 kg (30 975 lb) (c)	34 460 kg (75 975 lb) (c)
A321NEO WV070 (CG 38.71%)	80 400 kg (177 250 lb)	8 490 kg (18 700 lb)	16.28% MAC (a)	13 470 kg (29 700 lb)	38 230 kg (84 300 lb)	38.71% MAC (a)	12 490 kg (27 550 lb) (c)	30 590 kg (67 425 lb) (c)
A321NEO WV070 (CG 37%)	80 400 kg (177 250 lb)	8 490 kg (18 700 lb)	16.28% MAC (a)	13 470 kg (29 700 lb)	38 060 kg (83 900 lb)	37% MAC (a)	12 490 kg (27 550 lb) (c)	30 450 kg (67 125 lb) (c)
A321NEO WV071 (CG 36.07%)	97 400 kg (214 725 lb)	8 640 kg (19 050 lb)	17.5% MAC (b)	14 100 kg (31 075 lb)	46 280 kg (102 025 lb)	36.07% MAC (a)	15 140 kg (33 375 lb) (c)	37 030 kg (81 625 lb) (c)
A321NEO WV072 (CG 36.07%)	97 400 kg (214 725 lb)	8 640 kg (19 050 lb)	17.5% MAC (b)	14 100 kg (31 075 lb)	46 280 kg (102 025 lb)	36.07% MAC (a)	15 140 kg (33 375 lb) (c)	37 030 kg (81 625 lb) (c)
A321NEO WV079 (CG 36.53%)	95 400 kg (210 325 lb)	8 640 kg (19 050 lb)	17.5% MAC (b)	14 100 kg (31 100 lb)	45 390 kg (100 075 lb)	36.53% MAC (a)	14 830 kg (32 675 lb) (c)	36 310 kg (80 050 lb) (c)
A321NEO WV080 (CG 36.53%)	95 400 kg (210 325 lb)	8 640 kg (19 050 lb)	17.5% MAC (b)	14 100 kg (31 100 lb)	45 390 kg (100 075 lb)	36.53% MAC (a)	14 830 kg (32 675 lb) (c)	36 310 kg (80 050 lb) (c)

NOTE:
(a) LOADS CALCULATED USING AIRCRAFT AT MRW.
(b) LOADS CALCULATED USING AIRCRAFT AT 89 000 kg (196 200 lb).
(c) BRAKED MAIN GEAR.

N_AC_070300_1_0470103_01_01

Maximum Pavement Loads for A321NEO
(Sheet 3 of 3)
FIGURE-7-3-0-991-047-A01

****ON A/C A321neo-XLR**

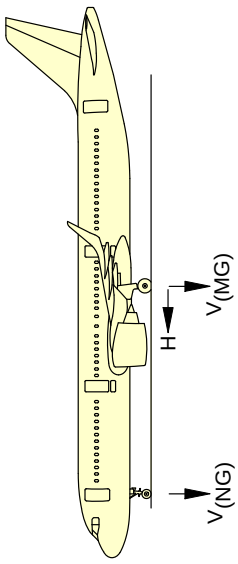

$V_{(NG)}$ MAXIMUM VERTICAL NOSE GEAR GROUND LOAD AT FORWARD CG
$V_{(MG)}$ MAXIMUM VERTICAL MAIN GEAR GROUND LOAD AT AFT CG
H MAXIMUM HORIZONTAL GROUND LOAD FROM BRAKING

1	2	3		4	5		6	
		$V_{(NG)}$			$V_{(MG)}$ (PER STRUT)		H (PER STRUT)	
WEIGHT VARIANT	MAXIMUM RAMP WEIGHT	STATIC LOAD AT FORWARD CG		STATIC BRAKING AT 10 ft/s² DECELERATION	STATIC LOAD AT AFT CG		STEADY BRAKING AT 10 ft/s² DECELERATION	AT INSTANTANEOUS BRAKING COEFFICIENT = 0.8
A321NEO XLR WV072 (CG 36%)	97 400 kg (214 725 lb)	8 640 kg (19 050 lb)	17.5% MAC (b)	14 100 kg (31 075 lb)	46 270 kg (102 025 lb)	36% MAC (a)	15 140 kg (33 375 lb) (c)	37 020 kg (81 600 lb) (c)
A321NEO XLR WV100	101 400 kg (223 550 lb)	8 640 kg (19 050 lb)	17.5% MAC (b)	14 090 kg (31 050 lb)	48 060 kg (105 950 lb)	35.12% MAC (a)	15 760 kg (34 750 lb) (c)	38 450 kg (84 775 lb) (c)

NOTE:
(a) LOADS CALCULATED USING AIRCRAFT AT MRW.
(b) LOADS CALCULATED USING AIRCRAFT AT 89 000 kg (196 200 lb).
(c) BRAKED MAIN GEAR.

N_AC_070300_1_0460101_01_01

Maximum Pavement Loads for A321NEO-XLR
FIGURE-7-3-0-991-046-A01

7-4-0 Landing Gear Loading on Pavement

****ON A/C A321-100 A321-200 A321neo A321neo-XLR**

Landing Gear Loading on Pavement

1. The curves related to the landing gear loading on pavement are not given in section 07-04-00. Because the relationship between the aircraft weight, the center of gravity and the landing gear loading on the pavement is not strictly linear, it cannot be shown in chart format. But you can find in section 07-03-00 the maximum vertical and horizontal pavement loads for some critical conditions at the tire/ground interfaces for all the operational weight variants of the aircraft.

   For questions that are related to landing gear loading on pavement, contact Airbus.

7-5-0 Flexible Pavement Requirements - U.S. Army Corps of Engineers Design Method

****ON A/C A321-100 A321-200 A321neo A321neo-XLR**

Flexible Pavement Requirements - US Army Corps of Engineers Design Method

1. The flexible pavement requirements curves as per as U.S. Army Corps of Engineers Design Method are not given in section 07-05-00 since the related data is available through free software.
   Sections 07-02-00 and 07-03-00 give all the inputs data required for the use of such software.

   NOTE : The U.S. Army Corps of Engineers Design Method for flexible pavements is being gradually superseded by mechanistic-empirical design methods mostly relying on Linear Elastic Analysis (LEA). The number of parameters considered by such methods is not applicable for a chart format and the use of dedicated pavement-design software is necessary.

   For questions that are related to the flexible pavement requirements, contact Airbus.

7-6-0 Flexible Pavement Requirements - LCN Conversion

****ON A/C A321-100 A321-200 A321neo A321neo-XLR**

Flexible Pavement Requirements - LCN Conversion

1. The Load Classification Number (LCN) curves are not given in section 07-06-00 since the LCN system for the reporting pavement strength is old and are replaced by the ICAO recommended ACN/PCN system in 1983 and ACR/PCR system in 2020.
   For questions that are related to the LCN system, contact Airbus.

7-7-0 Rigid Pavement Requirements - Portland Cement Association Design Method

****ON A/C A321-100 A321-200 A321neo A321neo-XLR**

Rigid Pavement Requirements - Portland Cement Association Design Method

1. The rigid-pavement requirements curves as per as Portland Cement Association Design Method are not given in section 07-07-00 since the related data is available through free software. Sections 07-02-00 and 07-03-00 give all the inputs data required for the use of such software.

   NOTE : The Portland Cement Association Design Method for rigid pavements is being gradually superseded by mechanistic-empirical design methods mostly relying on Finite Element Analysis (FEM). The number of parameters considered by such methods is not applicable for a chart format and the use of dedicated pavement-design software is necessary.

   For questions that are related to the rigid pavement requirements, contact Airbus.

7-8-0 Rigid Pavement Requirements - LCN Conversion

****ON A/C A321-100 A321-200 A321neo A321neo-XLR**

Rigid Pavement Requirements - LCN Conversion

1. The Load Classification Number (LCN) curves are not given in section 07-08-00 since the LCN system for the reporting pavement strength is old and are replaced by the ICAO recommended ACN/PCN system in 1983 and ACR/PCR system in 2020.
   For questions that are related to the LCN system, contact Airbus.

7-9-0 ACN/PCN Reporting System - Flexible and Rigid Pavements

****ON A/C A321-100 A321-200 A321neo A321neo-XLR**

Aircraft Classification Number - Flexible and Rigid Pavements

1. This section gives data about the Aircraft Classification Number (ACN) for an aircraft gross weight in relation with standard subgrade strength values for flexible and rigid pavement.

   To find the ACN of an aircraft on flexible and rigid pavement, you must know the aircraft gross weight and the subgrade strength.

   NOTE : An aircraft with an ACN equal to or less than the reported PCN can operate on that pavement, subject to any limitation on the tire pressure.
   (Ref: ICAO Aerodrome Design Manual, Part 3, Chapter 1, Second Edition 1983).

2. Aircraft Classification Number - ACN table

   The tables in FIGURE 7-9-0-991-019-A, FIGURE 7-9-0-991-022-A, FIGURE 7-9-0-991-025-A and FIGURE 7-9-0-991-028-A give ACN data in tabular format for all the operational weight variants.
   As an approximation, use a linear interpolation in order to get the ACN at the required operating weight using the following equation:
   - ACN = ACN min + (ACN max - ACN min) x (Operating weight - 47 000 kg)/(MRW - 47 000 kg)
     Please note that the interpolation error may reach 5% to 10%.

   As an approximation, use a linear interpolation in order to get the aircraft weight at the pavement PCN using the following equation:
   - Operating weight = 47 000 kg + (MRW - 47 000 kg) x (PCN - ACN min)/(ACN max - ACN min)
     Please note that the interpolation error may reach up to 5%.

   With ACN max = ACN calculated at the MRW in the table and with ACN min = ACN calculated at 47 000 kg.

   For questions or specific calculation regarding ACN/PCN Reporting System, contact Airbus.

****ON A/C A321-100**

WEIGHT VARIANT	ALL UP MASS (kg)	LOAD ON ONE MAIN GEAR LEG (%)	TIRE PRESSURE (MPa)	ACN FOR RIGID PAVEMENT SUBGRADES - MN/m³				ACN FOR FLEXIBLE PAVEMENT SUBGRADES - CBR			
				High 150	Medium 80	Low 40	Ultra-low 20	High 15	Medium 10	Low 6	Ultra-low 3
A321-100 WV000	83 400	47.8	1.36	51	54	57	59	45	48	53	59
	47 000	47.8		26	28	29	31	23	24	26	30
A321-100 WV002	83 400	47.8	1.36	51	54	57	59	45	48	53	59
	47 000	47.8		26	28	29	31	23	24	26	30
A321-100 WV003	85 400	47.9	1.39	53	56	59	61	47	49	55	60
	47 000	47.8		26	28	29	31	23	24	26	30
A321-100 WV004	78 400	47.8	1.28	47	50	52	54	42	43	49	55
	47 000	47.8		25	27	29	30	23	24	26	30
A321-100 WV005	83 400	47.8	1.36	51	54	57	59	45	48	53	59
	47 000	47.8		26	28	29	31	23	24	26	30
A321-100 WV006	78 400	47.8	1.28	47	50	52	54	42	43	49	55
	47 000	47.8		25	27	29	30	23	24	26	30
A321-100 WV007	80 400	47.8	1.36	49	52	54	57	43	45	51	56
	47 000	47.8		26	28	29	31	23	24	26	30
A321-100 WV008	89 400	47.5	1.46	56	59	62	64	49	52	57	63
	47 000	47.4		26	28	29	31	23	24	26	30

N_AC_070900_1_0190101_01_02

ACN Table for A321-100
FIGURE-7-9-0-991-019-A01

****ON A/C A321-200**

WEIGHT VARIANT	ALL UP MASS (kg)	LOAD ON ONE MAIN GEAR LEG (%)	TIRE PRESSURE (MPa)	ACN FOR RIGID PAVEMENT SUBGRADES - MN/m³				ACN FOR FLEXIBLE PAVEMENT SUBGRADES - CBR			
				High 150	Medium 80	Low 40	Ultra-low 20	High 15	Medium 10	Low 6	Ultra-low 3
A321-200 WV000	89 400	47.8	1.46	57	60	62	65	50	52	58	64
	47 000	47.8		27	28	30	31	24	24	26	30
A321-200 WV001	93 400	47.6	1.50	60	63	66	68	52	55	61	67
	47 000	47.6		27	28	30	31	24	24	26	30
A321-200 WV002	89 400	47.8	1.46	57	60	62	65	50	52	58	64
	47 000	47.8		27	28	30	31	24	24	26	30
A321-200 WV003	91 400	47.7	1.50	59	62	64	67	51	54	60	65
	47 000	47.7		27	28	30	31	24	24	26	30
A321-200 WV004	87 400	47.8	1.46	55	58	61	63	48	51	56	62
	47 000	47.8		27	28	30	31	24	24	26	30
A321-200 WV005	85 400	47.6	1.39	53	56	58	61	46	49	54	60
	47 000	47.6		26	28	29	30	23	24	26	30
A321-200 WV006	83 400	47.7	1.36	51	54	57	59	45	47	53	59
	47 000	47.7		26	27	29	30	23	24	26	30
A321-200 WV007	83 400	47.7	1.36	51	54	57	59	45	47	53	59
	47 000	47.7		26	27	29	30	23	24	26	30
A321-200 WV008 (CG 40.51%)	80 400	47.8	1.36	49	52	54	57	43	45	51	56
	47 000	47.8		26	28	29	30	23	24	26	30
A321-200 WV008 (CG 39.71%)	80 400	47.7	1.36	49	52	54	56	43	45	50	56
	47 000	47.7		26	27	29	30	23	24	26	30
A321-200 WV009 (CG 40.08%)	78 400	47.7	1.28	47	49	52	54	42	43	49	55
	47 000	47.7		25	27	29	30	23	24	26	30
A321-200 WV009 (CG 39.21%)	78 400	47.6	1.28	46	49	52	54	41	43	49	55
	47 000	47.6		25	27	29	30	23	24	26	30
A321-200 WV010	85 400	47.6	1.39	53	56	58	61	46	49	54	60
	47 000	47.6		26	28	29	30	23	24	26	30
A321-200 WV011	93 900	47.6	1.50	61	63	66	69	53	56	61	67
	47 000	47.6		27	28	30	31	24	24	26	30

N_AC_070900_1_0220101_01_03

ACN Table for A321-200
FIGURE-7-9-0-991-022-A01

**ON A/C A321neo

WEIGHT VARIANT	ALL UP MASS (kg)	LOAD ON ONE MAIN GEAR LEG (%)	TIRE PRESSURE (MPa)	ACN FOR RIGID PAVEMENT SUBGRADES - MN/m³				ACN FOR FLEXIBLE PAVEMENT SUBGRADES - CBR			
				HIGH 150	MEDIUM 80	LOW 40	ULTRA-LOW 20	HIGH 15	MEDIUM 10	LOW 6	ULTRA-LOW 3
A321NEO WV050 (CG 38.02%)	89 400	47.8	1.46	57	60	62	65	50	52	58	64
	47 000	47.8		27	28	30	31	24	24	26	30
A321NEO WV050 (CG 37%)	89 400	47.6	1.46	57	60	62	64	49	52	58	63
	47 000	47.6		26	28	29	31	24	24	26	30
A321NEO WV051 (CG 38.02%)	89 400	47.8	1.46	57	60	62	65	50	52	58	64
	47 000	47.8		27	28	30	31	24	24	26	30
A321NEO WV051 (CG 37%)	89 400	47.6	1.46	57	60	62	64	49	52	58	63
	47 000	47.6		26	28	29	31	24	24	26	30
A321NEO WV052 (CG 36.88%)	93 900	47.6	1.50	61	63	66	69	53	56	61	67
	47 000	47.6		27	28	30	31	24	24	26	30
A321NEO WV053 (CG 36.88%)	93 900	47.6	1.50	61	63	66	69	53	56	61	67
	47 000	47.6		27	28	30	31	24	24	26	30
A321NEO WV056 (CG 37.12%)	92 900	47.7	1.50	60	63	65	68	52	55	61	66
	47 000	47.6		27	28	30	31	24	24	26	30
A321NEO WV056 (CG 37%)	92 900	47.6	1.50	60	63	65	68	52	55	61	66
	47 000	47.6		27	28	30	31	24	24	26	30
A321NEO WV057 (CG 37.12%)	92 900	47.7	1.50	60	63	65	68	52	55	61	66
	47 000	47.6		27	28	30	31	24	24	26	30
A321NEO WV057 (CG 37%)	92 900	47.6	1.50	60	63	65	68	52	55	61	66
	47 000	47.6		27	28	30	31	24	24	26	30
A321NEO WV059 (CG 37.25%)	92 400	47.7	1.50	59	62	65	67	52	55	60	66
	47 000	47.7		27	28	30	31	24	24	26	30
A321NEO WV059 (CG 37%)	92 400	47.6	1.50	59	62	65	67	52	54	60	66
	47 000	47.6		27	28	30	31	24	24	26	30

N_AC_070900_1_0250101_01_08

ACN Table for A321NEO
(Sheet 1 of 2)
FIGURE-7-9-0-991-025-A01

**ON A/C A321neo

WEIGHT VARIANT	ALL UP MASS (kg)	LOAD ON ONE MAIN GEAR LEG (%)	TIRE PRESSURE (MPa)	ACN FOR RIGID PAVEMENT SUBGRADES - MN/m³				ACN FOR FLEXIBLE PAVEMENT SUBGRADES - CBR			
				HIGH 150	MEDIUM 80	LOW 40	ULTRA-LOW 20	HIGH 15	MEDIUM 10	LOW 6	ULTRA-LOW 3
A321NEO WV063 (CG 37.5%)	91 400	47.7	1.50	59	62	64	67	51	54	60	65
	47 000	47.7		27	28	30	31	24	24	26	30
A321NEO WV063 (CG 37%)	91 400	47.7	1.50	59	62	64	66	51	54	59	65
	47 000	47.6		27	28	30	31	24	24	26	30
A321NEO WV065 (CG 37.62%)	90 900	47.7	1.50	58	61	64	66	51	53	59	65
	47 000	47.7		27	28	30	31	24	24	26	30
A321NEO WV065 (CG 37%)	90 900	47.7	1.50	58	61	64	66	51	53	59	65
	47 000	47.6		27	28	30	31	24	24	26	30
A321NEO WV067 (CG 37.76%)	90 400	47.7	1.50	58	61	64	66	50	53	59	64
	47 000	47.7		27	28	30	31	24	24	26	30
A321NEO WV067 (CG 37%)	90 400	47.6	1.50	58	61	63	66	50	53	59	64
	47 000	47.6		27	28	30	31	24	24	26	30
A321NEO WV070 (CG 38.71%)	80 400	47.6	1.36	49	51	54	56	43	45	50	56
	47 000	47.5		26	27	29	30	23	24	26	30
A321NEO WV070 (CG 37%)	80 400	47.3	1.36	48	51	54	56	43	45	50	56
	47 000	47.3		26	27	29	30	23	23	25	30
A321NEO WV071 (CG 36.07%)	97 400	47.5	1.57	64	67	70	72	55	58	64	70
	47 000	47.5		27	28	30	31	24	24	26	30
A321NEO WV072 (CG 36.07%)	97 400	47.5	1.57	64	67	70	72	55	58	64	70
	47 000	47.5		27	28	30	31	24	24	26	30
A321NEO WV079 (CG 36.53%)	95 400	47.6	1.57	62	65	68	70	54	57	63	68
	47 000	47.6		27	28	30	31	24	24	26	30
A321NEO WV080 (CG 36.53%)	95 400	47.6	1.57	62	65	68	70	54	57	63	68
	47 000	47.6		27	28	30	31	24	24	26	30

N_AC_070900_1_0250103_01_01

ACN Table for A321NEO
(Sheet 2 of 2)
FIGURE-7-9-0-991-025-A01

****ON A/C A321neo-XLR**

WEIGHT VARIANT	ALL UP MASS (kg)	LOAD ON ONE MAIN GEAR LEG (%)	TIRE PRESSURE (MPa)	ACN FOR RIGID PAVEMENT SUBGRADES - MN/m³				ACN FOR FLEXIBLE PAVEMENT SUBGRADES - CBR			
				HIGH 150	MEDIUM 80	LOW 40	ULTRA -LOW 20	HIGH 15	MEDIUM 10	LOW 6	ULTRA -LOW 3
A321NEO XLR WV072 (CG 36%)	97 400	47.5	1.57	64	67	70	72	55	58	64	70
	47 000	47.5		27	28	30	31	24	24	26	30
A321NEO XLR WV100	101 400	47.4	1.62	67	70	73	75	58	61	67	73
	47 000	47.4		27	29	30	31	24	24	26	30

N_AC_070900_1_0280101_01_01

ACN Table for A321NEO-XLR
FIGURE-7-9-0-991-028-A01

7-10-0 ACR/PCR Reporting System - Flexible And Rigid Pavements

****ON A/C A321-100 A321-200 A321neo A321neo-XLR**

ACR/PCR Reporting System - Flexible and Rigid Pavements

1. The ACR/PCR system has been developed by the ICAO to overcome the deficiencies of the ACN/PCN system. Significant advances in pavement design methods had occurred since its development in the late 1970s early 1980s, leading to inconsistencies with the pavement-strength-rating system.

   The ACR/PCR system entails new procedures for the determination of both the ACR and the PCR that are consistent with the current pavement design procedures. This allows to capture the effects of the improved characteristics of new pavement materials as well as modern landing gear configurations, thus leading to an improved accuracy.

   This section gives data about the Aircraft Classification Rating (ACR) for the maximum ramp weight in relation with standard subgrade strength values for flexible and rigid pavement.
   To determine the ACR at other aircraft gross weight, use the official ICAO-ACR software.

   NOTE : An aircraft with an ACR equal to or less than the reported PCR can operate on that pavement, subject to any limitation on the tire pressure. (Ref: ICAO Aerodrome Design Manual, Part 3, Third Edition 2020).

2. Aircraft Classification Rating - ACR Table

   The tables in FIGURE 7-10-0-991-001-A, FIGURE 7-10-0-991-002-A, FIGURE 7-10-0-991-011-A and FIGURE 7-10-0-991-012-A give ACR data in tabular format for all the operational weight variants of the aircraft.
   For questions or specific calculation related to ACR/PCR Reporting System, contact Airbus.

****ON A/C A321-100**

WEIGHT VARIANT	ALL UP MASS (kg)	LOAD ON ONE MAIN GEAR LEG (%)	TIRE PRESSURE (MPa)	ACR FOR RIGID PAVEMENT SUBGRADES - MPa				ACR FOR FLEXIBLE PAVEMENT SUBGRADES - MPa			
				HIGH 200	MEDIUM 120	LOW 80	ULTRA-LOW 50	HIGH 200	MEDIUM 120	LOW 80	ULTRA-LOW 50
A321-100 WV000	83 400	47.8	1.36	530	550	570	590	400	430	480	540
A321-100 WV002	83 400	47.8	1.36	530	550	570	590	400	430	480	540
A321-100 WV003	85 400	47.9	1.39	550	570	590	610	410	450	490	550
A321-100 WV004	78 400	47.8	1.28	480	510	530	540	370	400	440	490
A321-100 WV005	83 400	47.8	1.36	530	550	570	590	400	430	480	540
A321-100 WV006	78 400	47.8	1.28	480	510	530	540	370	400	440	490
A321-100 WV007	80 400	47.8	1.36	510	530	550	560	380	410	450	510
A321-100 WV008	89 400	47.5	1.46	580	600	620	640	440	470	520	580

N_AC_071000_1_0010101_01_00

ACR Table
FIGURE-7-10-0-991-001-A01

****ON A/C A321-200**

WEIGHT VARIANT	ALL UP MASS (kg)	LOAD ON ONE MAIN GEAR LEG (%)	TIRE PRESSURE (MPa)	ACR FOR RIGID PAVEMENT SUBGRADES - MPa				ACR FOR FLEXIBLE PAVEMENT SUBGRADES - MPa			
				HIGH 200	MEDIUM 120	LOW 80	ULTRA-LOW 50	HIGH 200	MEDIUM 120	LOW 80	ULTRA-LOW 50
A321-200 WV000	89 400	47.8	1.46	580	610	620	640	440	470	520	590
A321-200 WV001	93 400	47.6	1.50	620	640	660	680	460	500	550	620
A321-200 WV002	89 400	47.8	1.46	580	610	620	640	440	470	520	590
A321-200 WV003	91 400	47.7	1.50	600	630	640	660	450	490	540	610
A321-200 WV004	87 400	47.8	1.46	570	590	610	630	430	460	510	570
A321-200 WV005	85 400	47.6	1.39	540	570	590	600	410	440	490	550
A321-200 WV006	83 400	47.7	1.36	530	550	570	590	400	430	470	530
A321-200 WV007	83 400	47.7	1.36	530	550	570	590	400	430	470	530
A321-200 WV008 (CG 40.51%)	80 400	47.8	1.36	500	530	550	560	380	410	450	510
A321-200 WV008 (CG 39.71%)	80 400	47.7	1.36	500	530	540	560	380	410	450	510
A321-200 WV009 (CG 40.08%)	78 400	47.7	1.28	480	510	520	540	370	400	440	490
A321-200 WV009 (CG 39.21%)	78 400	47.6	1.28	480	500	520	540	370	400	430	490
A321-200 WV010	85 400	47.6	1.39	540	570	590	600	410	440	490	550
A321-200 WV011	93 900	47.6	1.50	620	640	660	680	470	500	550	630

N_AC_071000_1_0020101_01_00

ACR Table
FIGURE-7-10-0-991-002-A01

**ON A/C A321neo

WEIGHT VARIANT	ALL UP MASS (kg)	LOAD ON ONE MAIN GEAR LEG (%)	TIRE PRESSURE (MPa)	ACR FOR RIGID PAVEMENT SUBGRADES - MPa				ACR FOR FLEXIBLE PAVEMENT SUBGRADES - MPa			
				HIGH 200	MEDIUM 120	LOW 80	ULTRA -LOW 50	HIGH 200	MEDIUM 120	LOW 80	ULTRA -LOW 50
A321NEO WV050 (CG 38.02%)	89 400	47.8	1.46	580	610	620	640	440	470	520	590
A321NEO WV050 (CG 37%)	89 400	47.6	1.46	580	610	620	640	440	470	520	590
A321NEO WV051 (CG 38.02%)	89 400	47.8	1.46	580	610	620	640	440	470	520	590
A321NEO WV051 (CG 37%)	89 400	47.6	1.46	580	610	620	640	440	470	520	590
A321NEO WV052 (CG 36.88%)	93 900	47.6	1.50	620	640	660	680	470	500	550	630
A321NEO WV053 (CG 36.88%)	93 900	47.6	1.50	620	640	660	680	470	500	550	630
A321NEO WV056 (CG 37.12%)	92 900	47.7	1.50	610	640	650	670	460	500	550	620
A321NEO WV056 (CG 37%)	92 900	47.6	1.50	610	640	650	670	460	500	550	620
A321NEO WV057 (CG 37.12%)	92 900	47.7	1.50	610	640	650	670	460	500	550	620
A321NEO WV057 (CG 37%)	92 900	47.6	1.50	610	640	650	670	460	500	550	620
A321NEO WV059 (CG 37.25%)	92 400	47.7	1.50	610	630	650	670	460	500	540	610
A321NEO WV059 (CG 37%)	92 400	47.6	1.50	610	630	650	670	460	490	540	610

N_AC_071000_1_0110102_01_03

ACR Table
(Sheet 1 of 2)
FIGURE-7-10-0-991-011-A01

**ON A/C A321neo

WEIGHT VARIANT	ALL UP MASS (kg)	LOAD ON ONE MAIN GEAR LEG (%)	TIRE PRESSURE (MPa)	ACR FOR RIGID PAVEMENT SUBGRADES - MPa				ACR FOR FLEXIBLE PAVEMENT SUBGRADES - MPa			
				HIGH 200	MEDIUM 120	LOW 80	ULTRA -LOW 50	HIGH 200	MEDIUM 120	LOW 80	ULTRA -LOW 50
A321NEO WV063 (CG 37.5%)	91 400	47.7	1.50	600	630	640	660	450	490	540	610
A321NEO WV063 (CG 37%)	91 400	47.7	1.50	600	620	640	660	450	490	530	610
A321NEO WV065 (CG 37.62%)	90 900	47.7	1.50	600	620	640	660	450	490	530	600
A321NEO WV065 (CG 37%)	90 900	47.7	1.50	600	620	640	660	450	480	530	600
A321NEO WV067 (CG 37.76%)	90 400	47.7	1.50	590	620	640	650	450	480	530	600
A321NEO WV067 (CG 37%)	90 400	47.6	1.50	590	620	630	650	450	480	530	600
A321NEO WV070 (CG 38.71%)	80 400	47.6	1.36	500	530	540	560	380	410	450	510
A321NEO WV070 (CG 37%)	80 400	47.3	1.36	500	520	540	560	380	410	450	500
A321NEO WV071 (CG 36.07%)	97 400	47.5	1.57	650	680	690	710	490	530	580	660
A321NEO WV072 (CG 36.07%)	97 400	47.5	1.57	650	680	690	710	490	530	580	660
A321NEO WV079 (CG 36.53%)	95 400	47.6	1.57	640	660	680	700	480	520	570	640
A321NEO WV080 (CG 36.53%)	95 400	47.6	1.57	640	660	680	700	480	520	570	640

N_AC_071000_1_0110103_01_01

ACR Table
(Sheet 2 of 2)
FIGURE-7-10-0-991-011-A01

****ON A/C A321neo-XLR**

WEIGHT VARIANT	ALL UP MASS (kg)	LOAD ON ONE MAIN GEAR LEG (%)	TIRE PRESSURE (MPa)	ACR FOR RIGID PAVEMENT SUBGRADES - MPa				ACR FOR FLEXIBLE PAVEMENT SUBGRADES - MPa			
				HIGH 200	MEDIUM 120	LOW 80	ULTRA -LOW 50	HIGH 200	MEDIUM 120	LOW 80	ULTRA -LOW 50
A321NEO XLR WV072 (CG 36%)	97 400	47.5	1.57	650	680	690	710	490	530	580	660
A321NEO XLR WV100	101 400	47.4	1.62	690	710	730	750	510	560	610	690

N_AC_071000_1_0120101_01_01

ACR Table
FIGURE-7-10-0-991-012-A01

SCALED DRAWINGS

8-0-0 SCALED DRAWINGS

****ON A/C A321-100 A321-200 A321neo A321neo-XLR**

Scaled Drawings

1. This section provides the scaled drawings.

NOTE : When printing this drawing, make sure to adjust for proper scaling.

****ON A/C A321-100 A321-200**

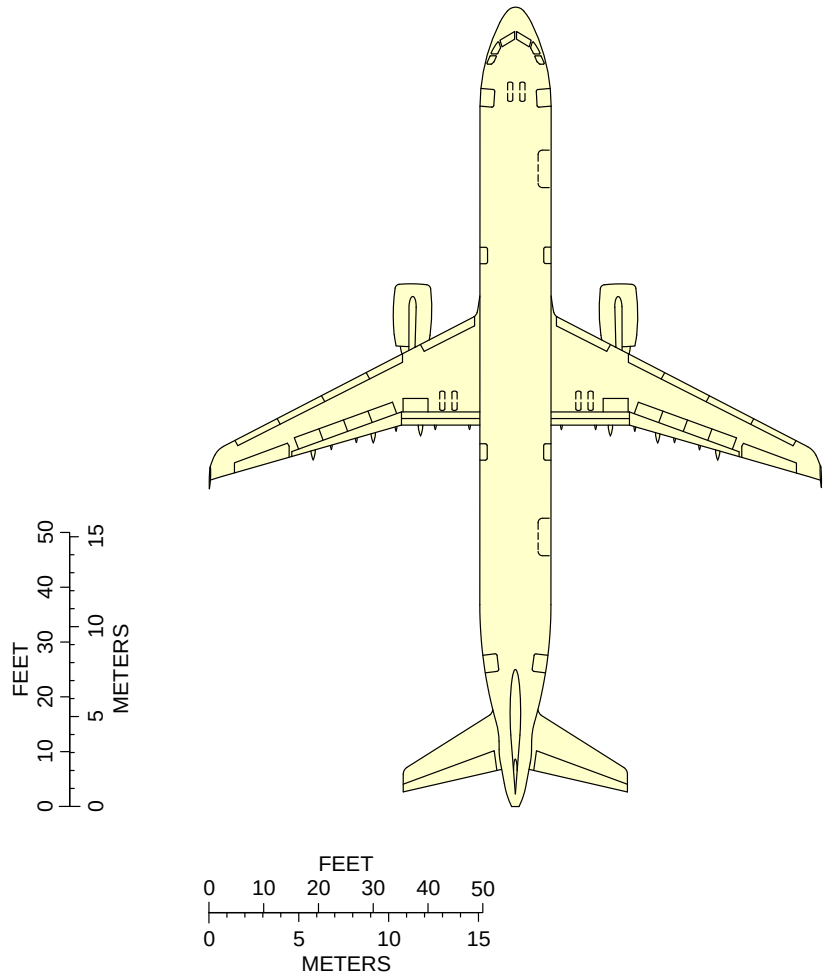

NOTE: WHEN PRINTING THIS DRAWING, MAKE SURE TO ADJUST FOR PROPER SCALING.

N_AC_080000_1_0040101_01_00

Scaled Drawing
FIGURE-8-0-0-991-004-A01

****ON A/C A321neo**

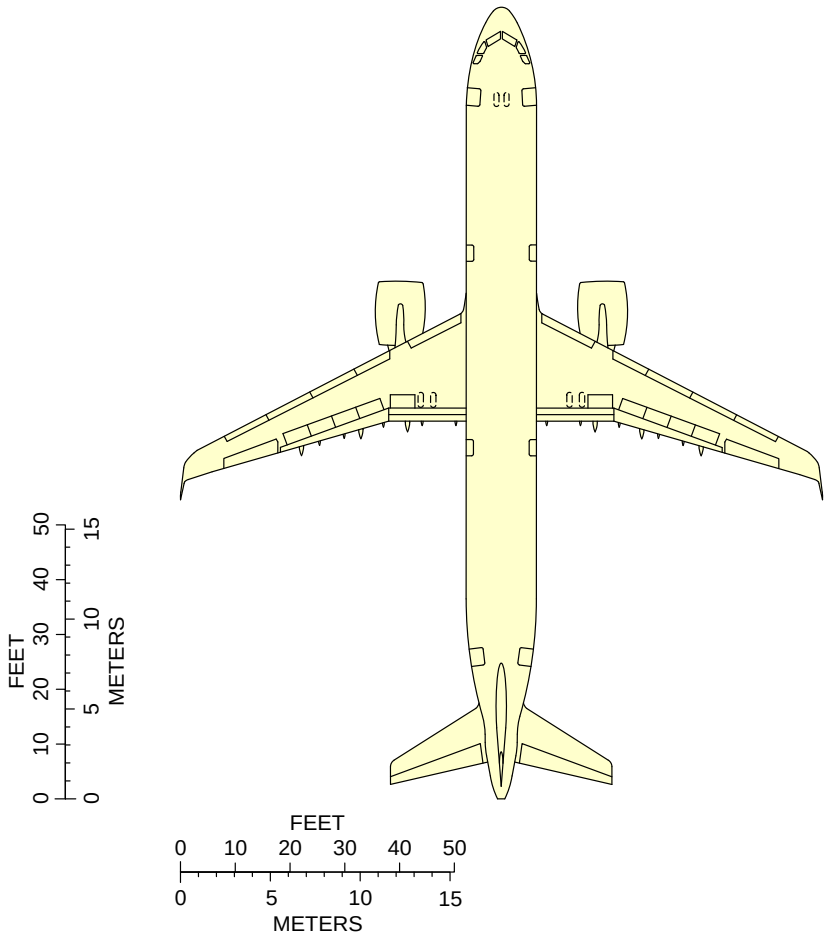

NOTE:
WHEN PRINTING THIS DRAWING, MAKE SURE TO ADJUST FOR PROPER SCALING.

N_AC_080000_1_0070101_01_00

Scaled Drawing
FIGURE-8-0-0-991-007-A01

**ON A/C A321neo-XLR

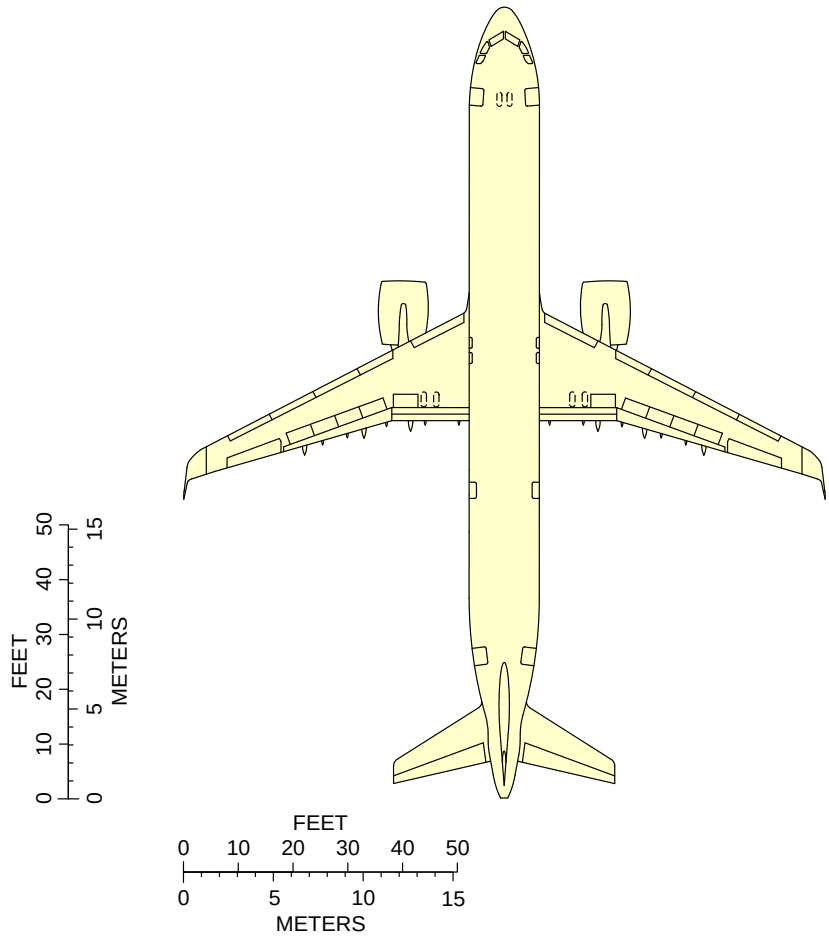

NOTE:
WHEN PRINTING THIS DRAWING, MAKE SURE TO ADJUST FOR PROPER SCALING.

N_AC_080000_1_0080101_01_00

Scaled Drawing
FIGURE-8-0-0-991-008-A01

AIRCRAFT RESCUE AND FIRE FIGHTING

10-0-0 AIRCRAFT RESCUE AND FIRE FIGHTING

****ON A/C A321-100 A321-200 A321neo A321neo-XLR**

Aircraft Rescue and Fire Fighting

1. Aircraft Rescue and Fire Fighting Charts

   This sections provides data related to aircraft rescue and fire fighting.
   The figures contained in this section are the figures that are in the Aircraft Rescue and Fire Fighting Charts poster available for download on AIRBUSWorld and the Airbus website.

****ON A/C A321-100 A321-200 A321neo A321neo-XLR**

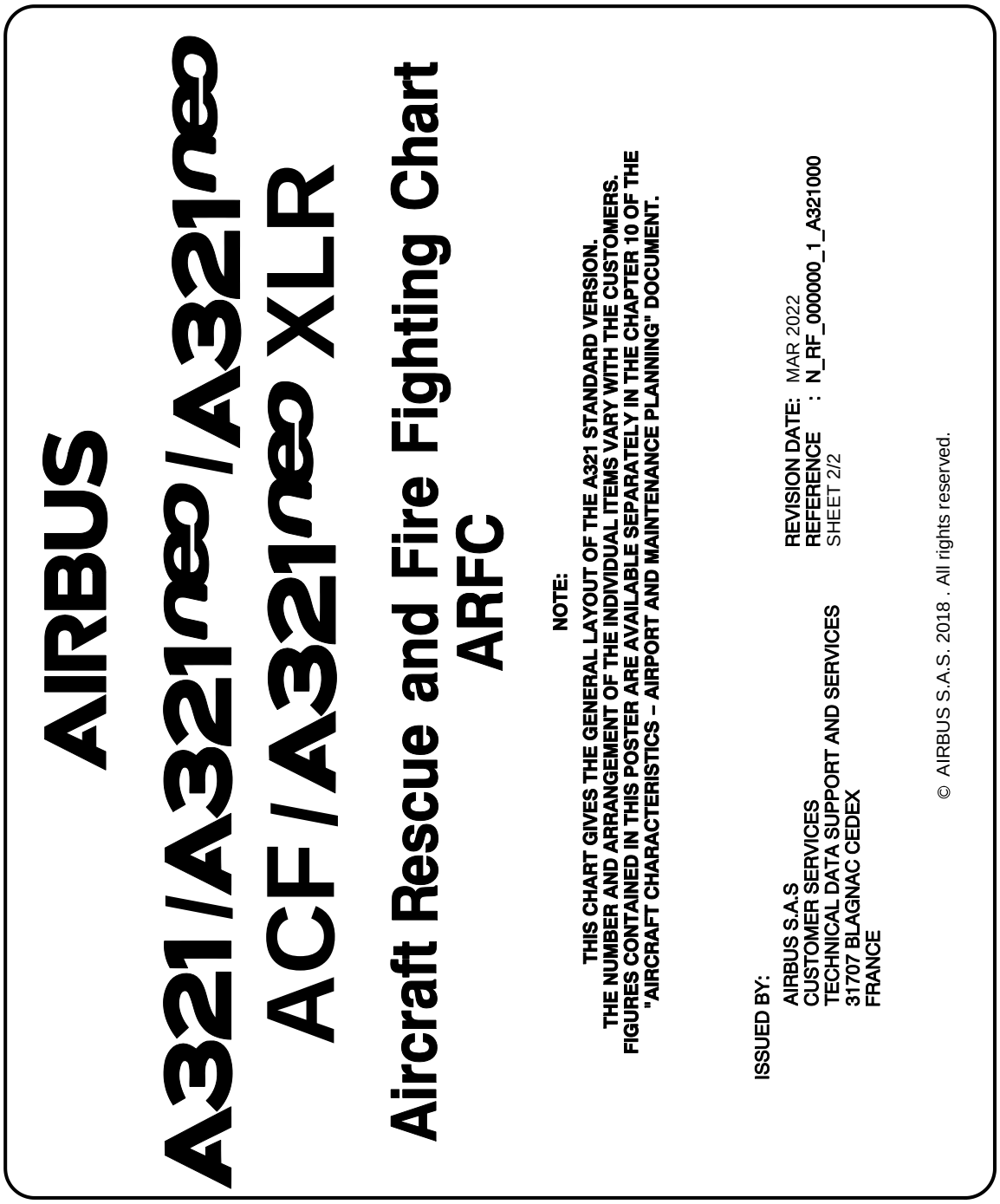

N_AC_100000_1_0650101_01_00

Front Page
FIGURE-10-0-0-991-065-A01

****ON A/C A321-100 A321-200 A321neo**

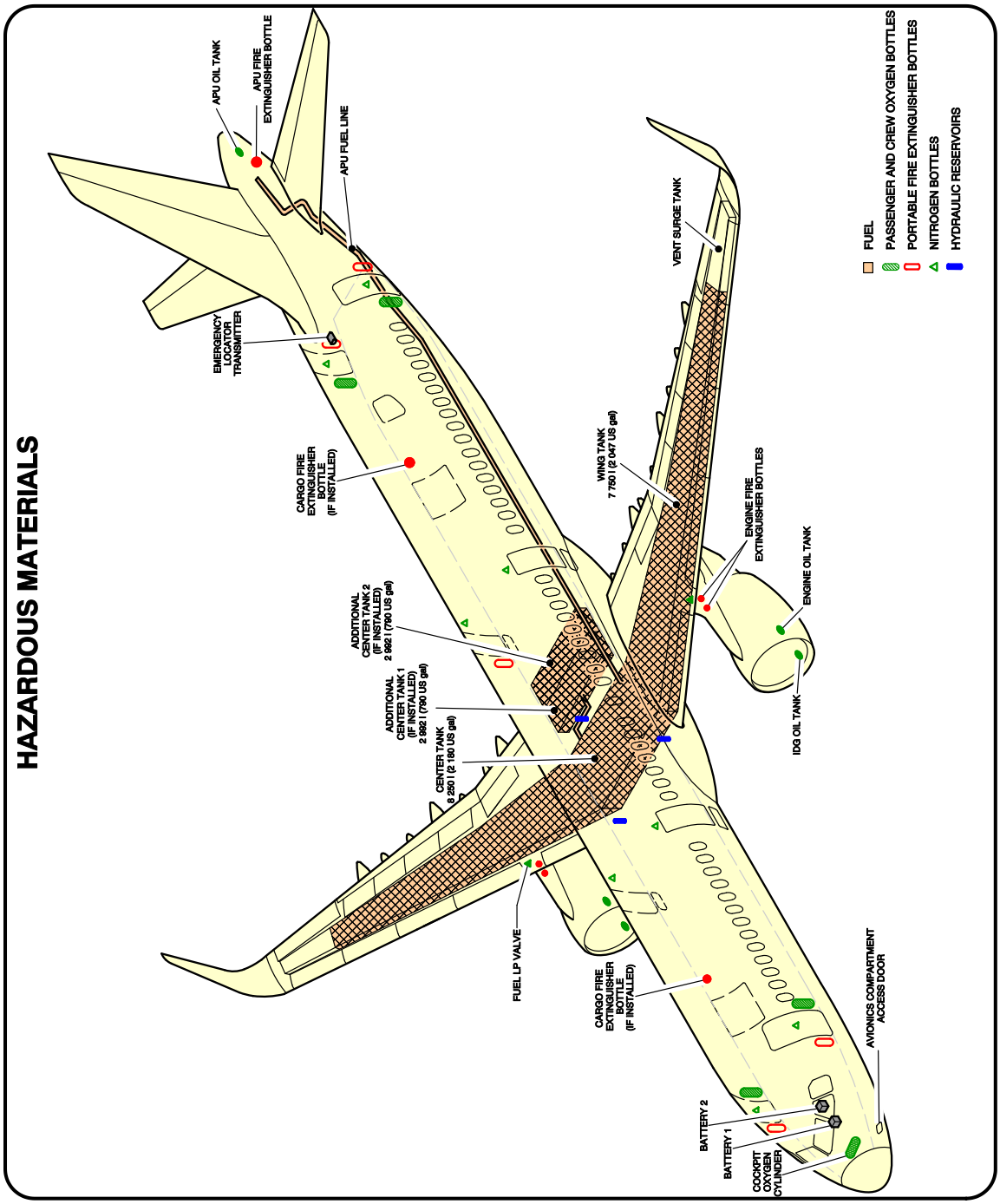

N_AC_100000_1_0440101_01_02

Highly Flammable and Hazardous Materials and Components
FIGURE-10-0-0-991-044-A01

****ON A/C A321neo-XLR**

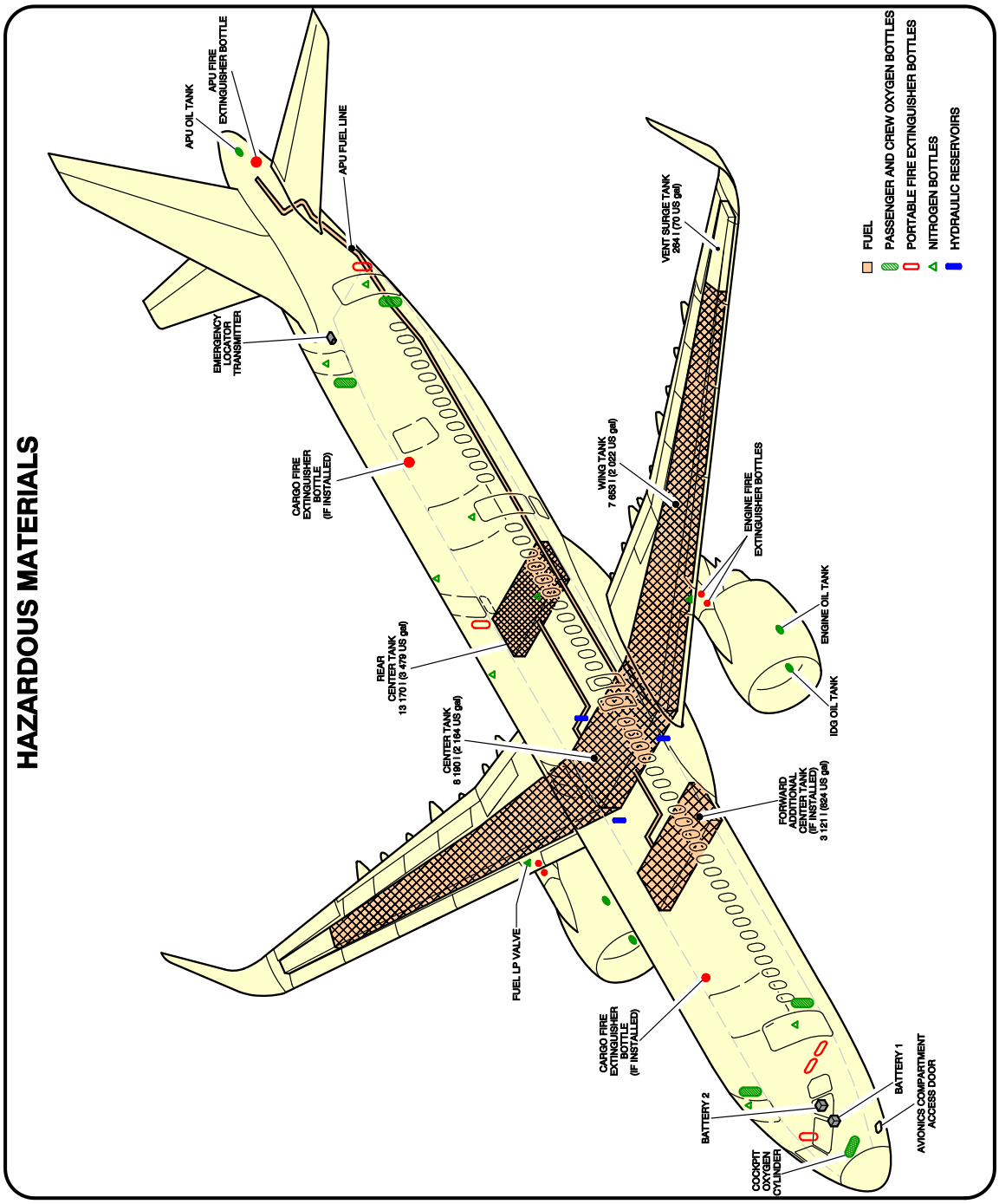

N_AC_100000_1_0640101_01_00

Highly Flammable and Hazardous Materials and Components
FIGURE-10-0-0-991-064-A01

**ON A/C A321-100 A321-200 A321neo A321neo-XLR

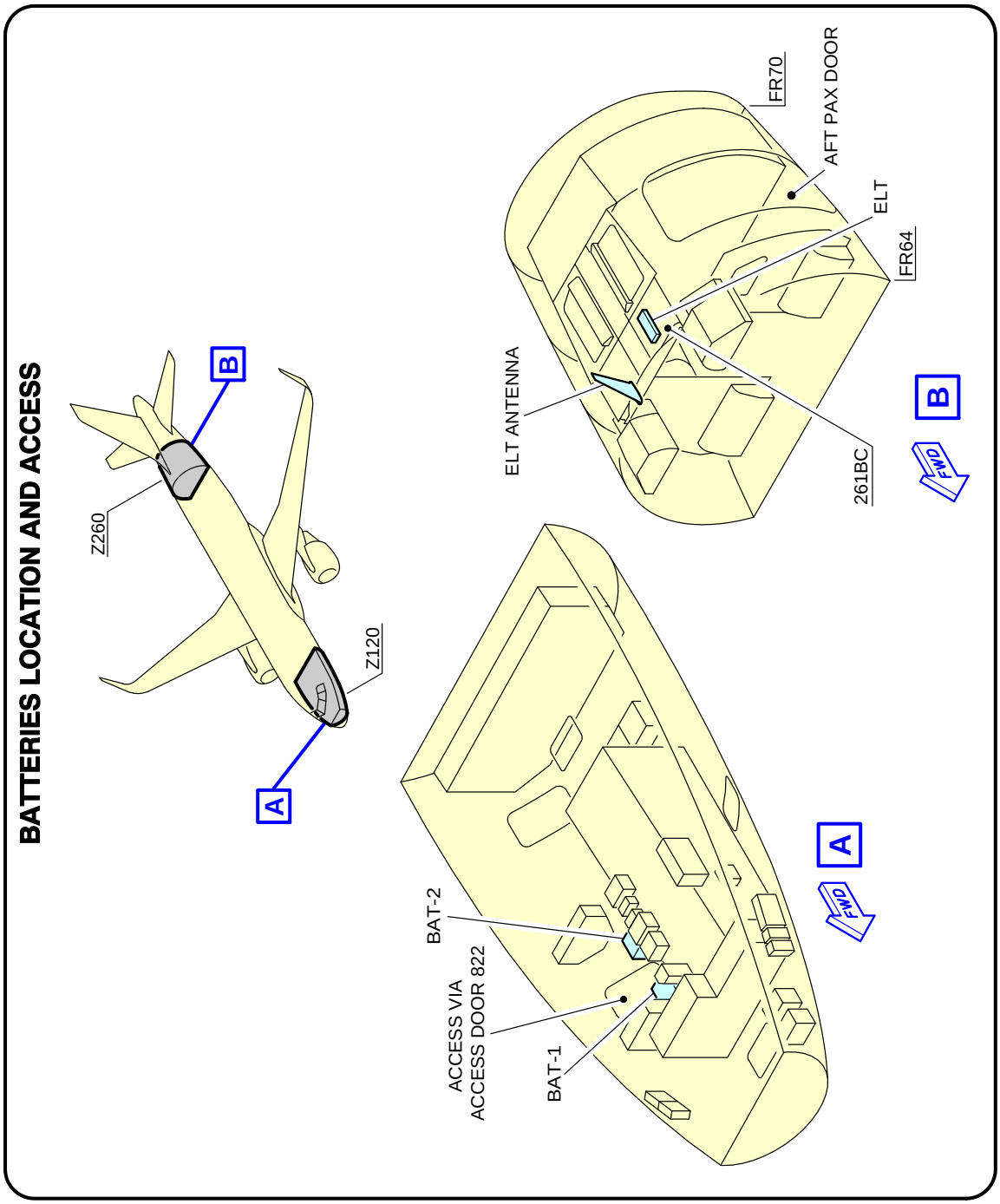

Batteries Location and Access
FIGURE-10-0-0-991-058-A01

**ON A/C A321-100 A321-200 A321neo A321neo-XLR

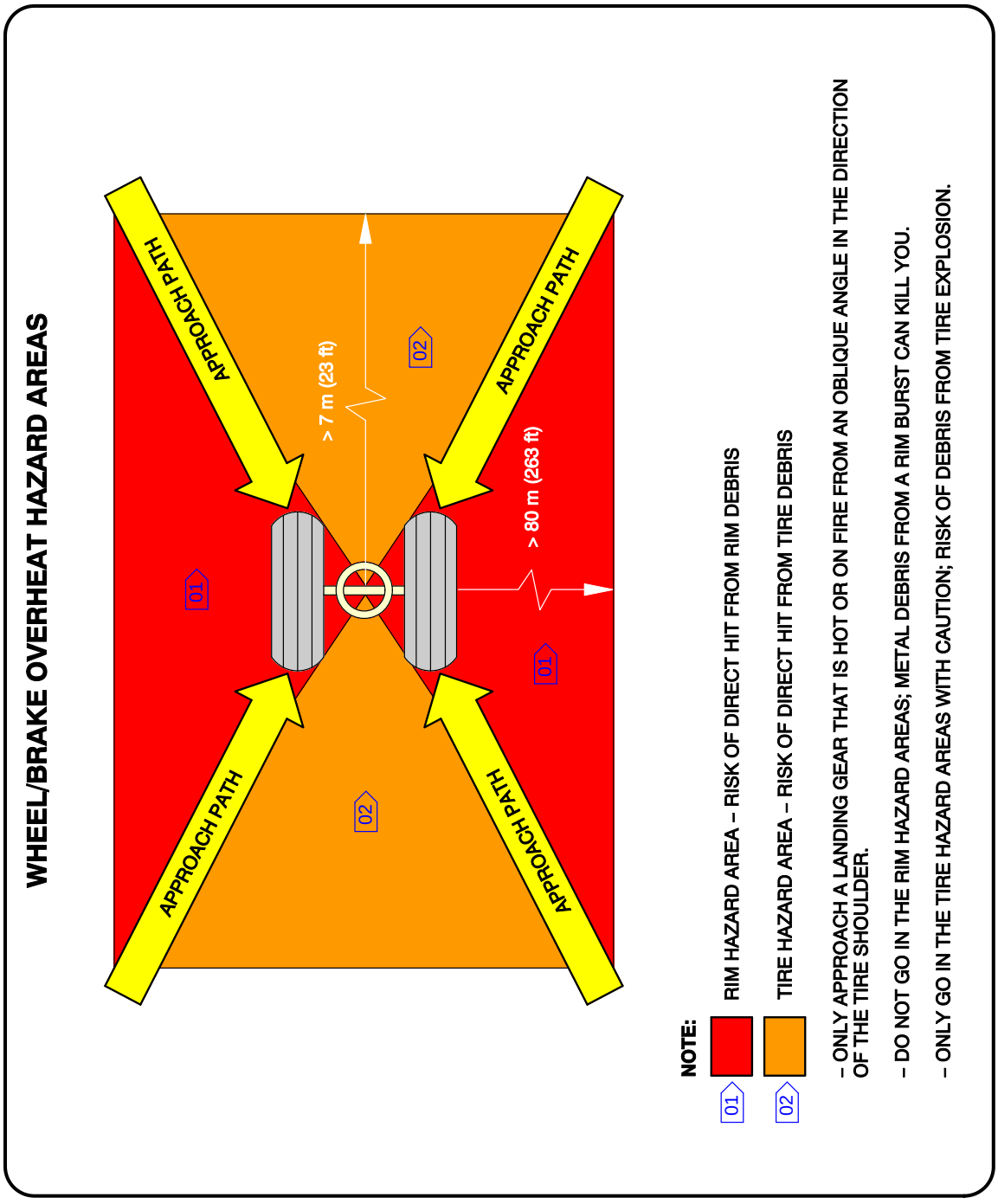

N_AC_100000_1_0450101_01_02

Wheel/Brake Overheat
Wheel Safety Area (Sheet 1 of 2)
FIGURE-10-0-0-991-045-A01

****ON A/C A321-100 A321-200 A321neo A321neo-XLR**

BRAKE OVERHEAT AND LANDING GEAR FIRE

WARNING: BE VERY CAREFUL WHEN THERE IS A BRAKE OVERHEAT AND/OR LANDING GEAR FIRE.
THERE IS A RISK OF TIRE EXPLOSION AND/OR WHEEL RIM BURST THAT CAN CAUSE DEATH OR INJURY.
MAKE SURE THAT YOU OBEY THE SAFETY PRECAUTIONS THAT FOLLOW.

THE PROCEDURES THAT FOLLOW GIVE RECOMMENDATIONS AND SAFETY PRECAUTIONS FOR THE COOLING OF VERY HOT BRAKES AFTER ABNORMAL OPERATIONS SUCH AS A REJECTED TAKE–OFF OR OVERWEIGHT LANDING. FOR THE COOLING OF BRAKES AFTER NORMAL TAXI–IN, REFER TO YOUR COMPANY PROCEDURES.

BRAKE OVERHEAT:

1 – GET THE BRAKE TEMPERATURE FROM THE COCKPIT OR USE A REMOTE MEASUREMENT TECHNIQUE.
THE REAL TEMPERATURE OF THE BRAKES CAN BE MUCH HIGHER THAN THE TEMPERATURE SHOWN ON THE ECAM.
NOTE: AT HIGH TEMPERATURES (>800°C), THERE IS A RISK OF WARPING OF THE LANDING GEAR STRUTS AND AXLES.

2 – APPROACH THE LANDING GEAR WITH EXTREME CAUTION AND FROM AN OBLIQUE ANGLE IN THE DIRECTION OF THE TIRE SHOULDER. DO NOT GO INTO THE RIM HAZARD AREA AND ONLY GO IN THE TIRE HAZARD AREA WITH CAUTION.
(REF FIG. WHEEL/BRAKE OVERHEAT HAZARD AREAS). IF POSSIBLE, STAY IN A VEHICLE.

3 – LOOK AT THE CONDITION OF THE TIRES:
IF THE TIRES ARE STILL INFLATED (FUSE PLUGS NOT MELTED), THERE IS A RISK OF TIRE EXPLOSION AND RIM BURST.
DO NOT USE COOLING FANS BECAUSE THEY CAN PREVENT OPERATION OF THE FUSE PLUGS.

4 – USE WATER MIST TO DECREASE THE TEMPERATURE OF THE COMPLETE WHEEL AND BRAKE ASSEMBLY.
USE A TECHNIQUE THAT PREVENTS SUDDEN COOLING. SUDDEN COOLING CAN CAUSE WHEEL CRACKS OR RIM BURST.
DO NOT APPLY WATER, FOAM OR CO_2. THESE COOLING AGENTS (AND ESPECIALLY CO_2, WHICH HAS A VERY STRONG COOLING EFFECT) CAN CAUSE THERMAL SHOCKS AND BURST OF HOT PARTS.

LANDING GEAR FIRE:

CAUTION: AIRBUS RECOMMENDS THAT YOU DO NOT USE DRY POWDERS OR DRY CHEMICALS ON HOT BRAKES OR LANDING GEAR FIRES. THESE AGENTS CAN CHANGE INTO SOLID OR ENAMELED DEPOSITS. THEY CAN DECREASE THE SPEED OF HEAT DISSIPATION WITH A POSSIBLE RISK OF PERMANENT STRUCTURAL DAMAGE TO THE BRAKES, WHEELS OR WHEEL AXLES.

1 – IMMEDIATELY STOP THE FIRE:

A) APPROACH THE LANDING GEAR WITH EXTREME CAUTION AND FROM AN OBLIQUE ANGLE IN THE DIRECTION OF THE TIRE SHOULDER. DO NOT GO INTO THE RIM HAZARD AREA AND ONLY GO IN THE TIRE HAZARD AREA WITH CAUTION.
IF POSSIBLE, STAY IN A VEHICLE.

B) USE LARGE AMOUNTS OF WATER, WATER MIST; IF THE FUEL TANKS ARE AT RISK, USE FOAM.
USE A TECHNIQUE THAT PREVENTS SUDDEN COOLING. SUDDEN COOLING CAN CAUSE WHEEL CRACKS OR RIM BURST.

C) DO NOT USE FANS OR BLOWERS.

N_AC_100000_1_0450102_01_00

Wheel/Brake Overheat
Recommendations (Sheet 2 of 2)
FIGURE-10-0-0-991-045-A01

****ON A/C A321-100 A321-200 A321neo**

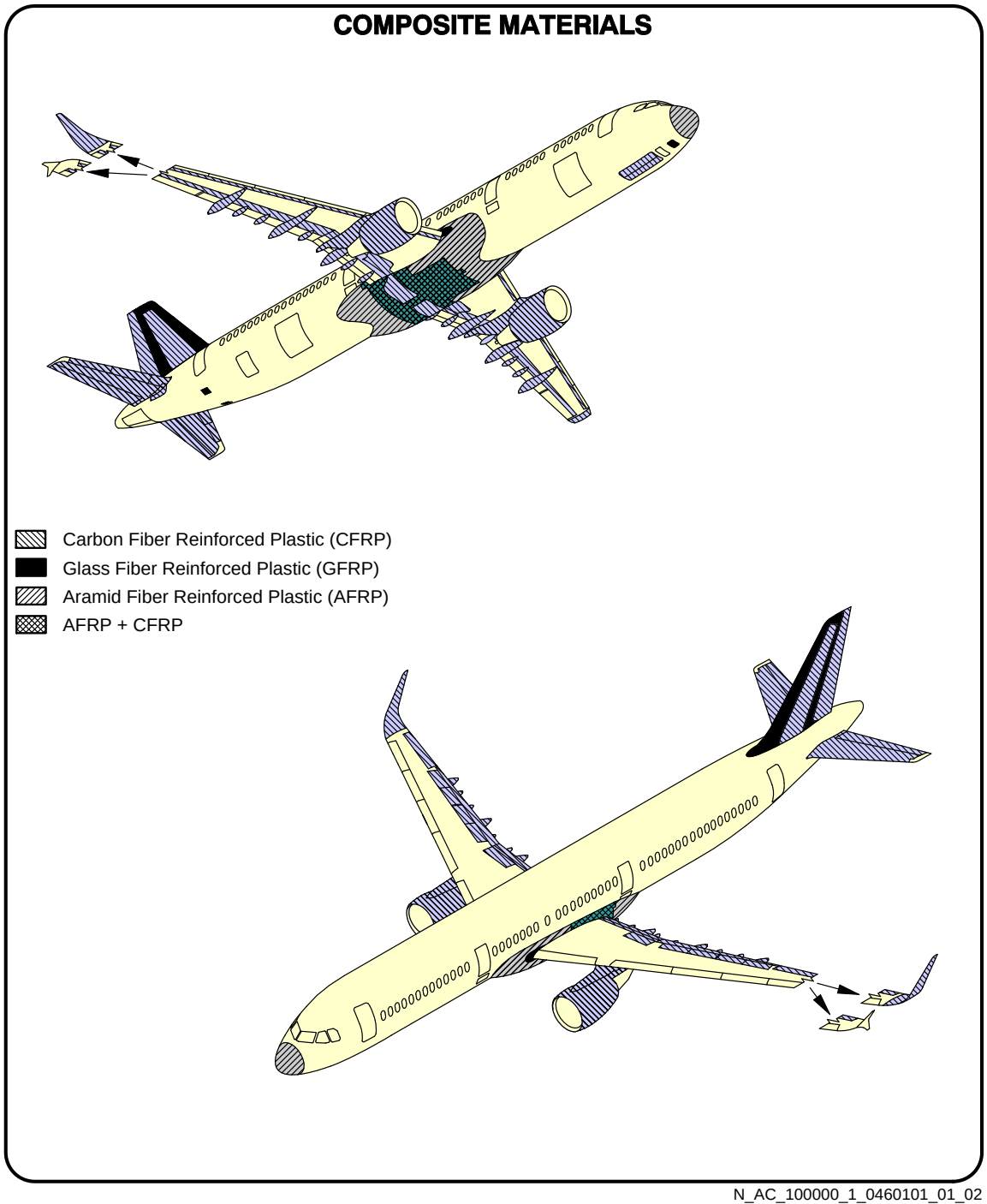

Composite Materials
FIGURE-10-0-0-991-046-A01

**ON A/C A321neo-XLR

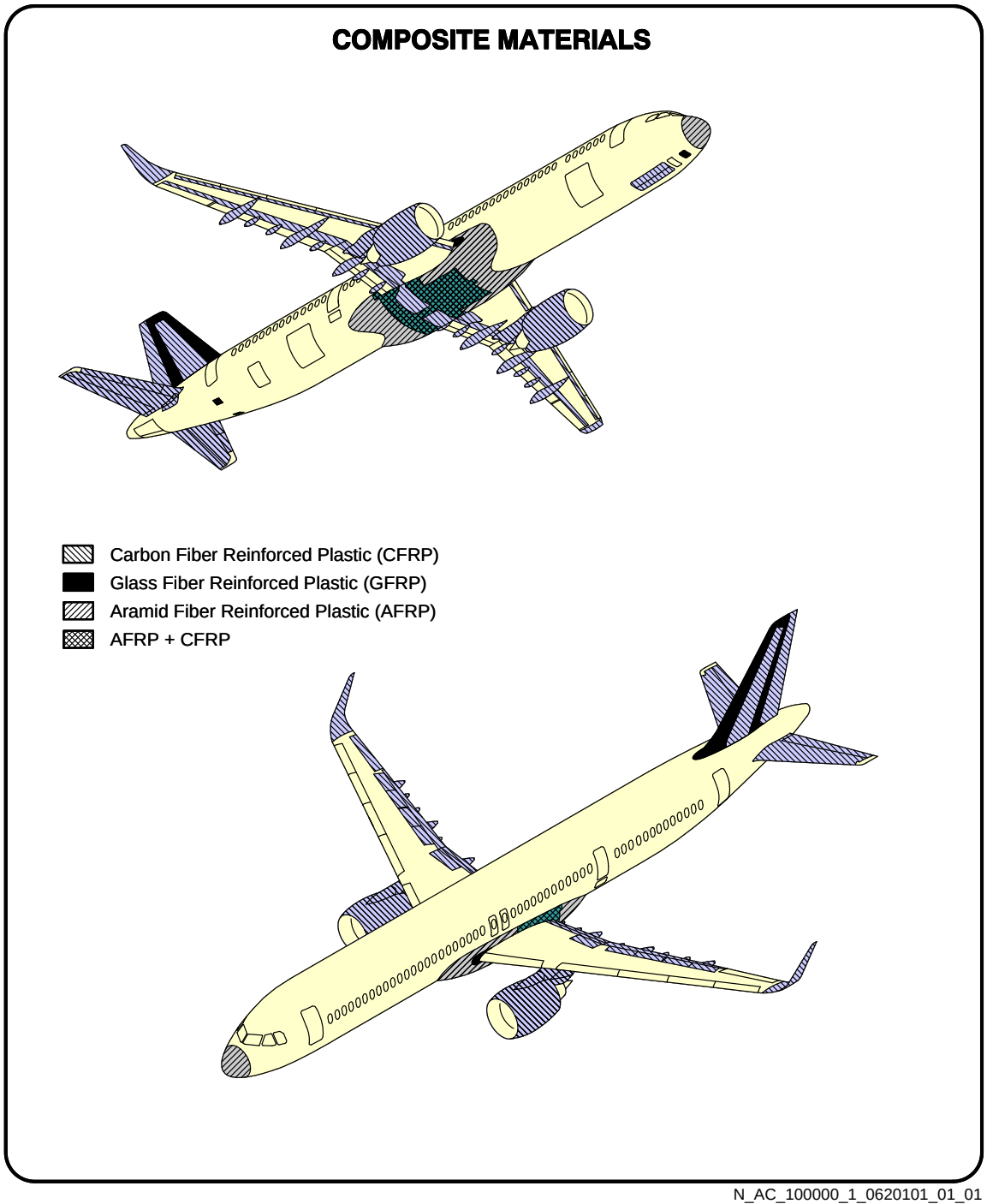

N_AC_100000_1_0620101_01_01

Composite Materials
FIGURE-10-0-0-991-062-A01

**ON A/C A321-100 A321-200 A321neo A321neo-XLR

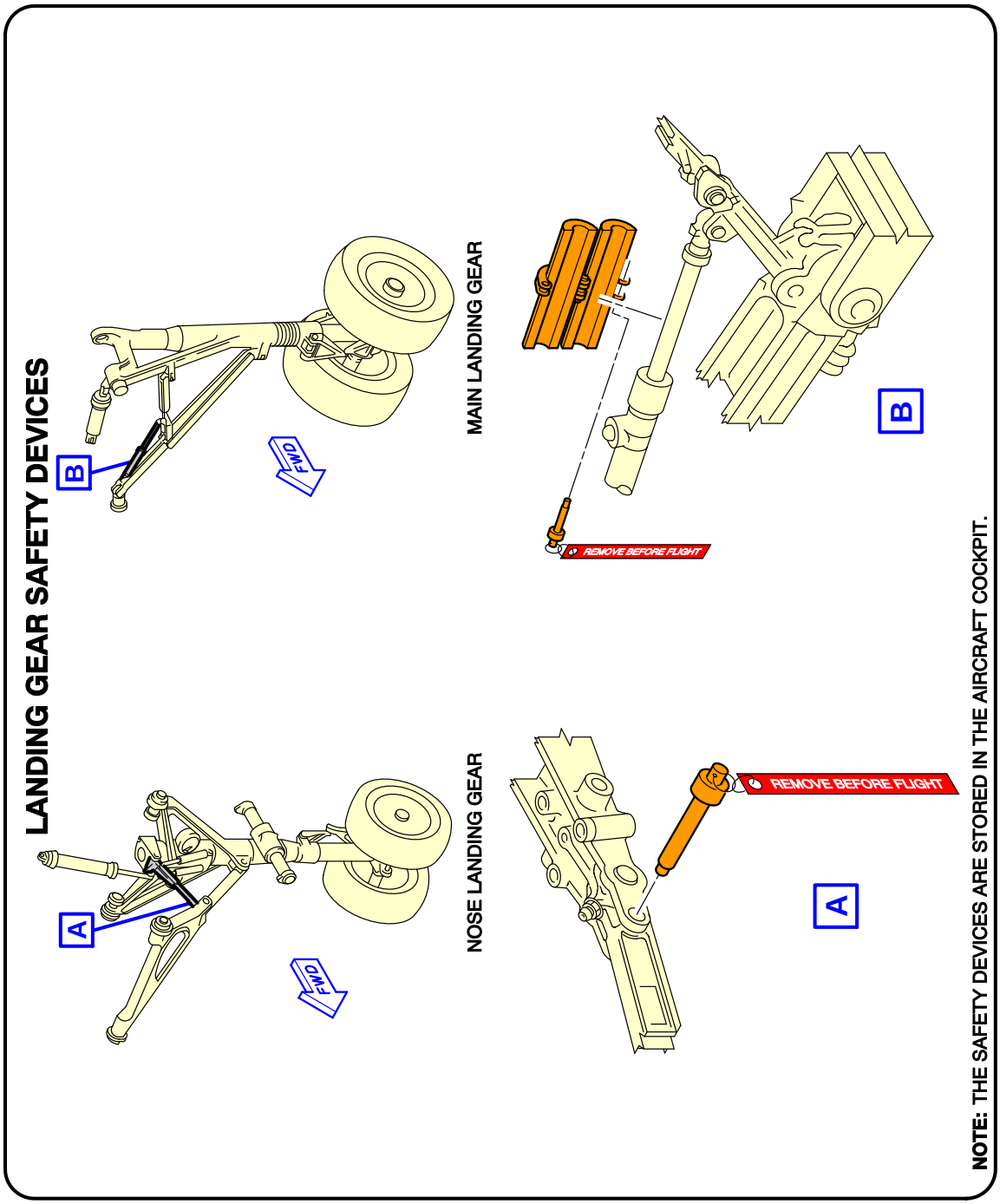

N_AC_100000_1_0470101_01_01

L/G Ground Lock Safety Devices
FIGURE-10-0-0-991-047-A01

****ON A/C A321-100 A321-200 A321neo**

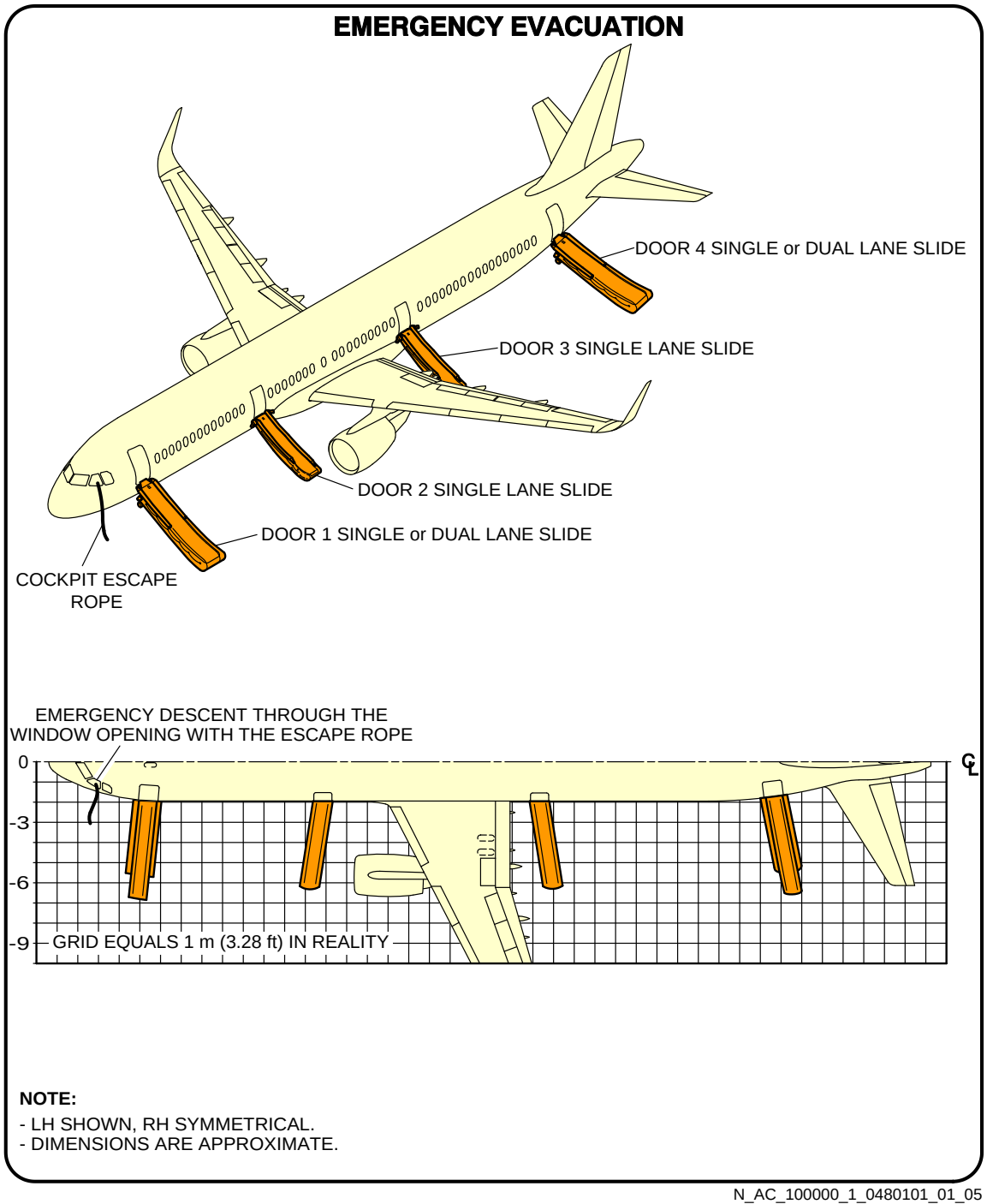

N_AC_100000_1_0480101_01_05

Emergency Evacuation Devices
FIGURE-10-0-0-991-048-A01

**ON A/C A321neo-XLR

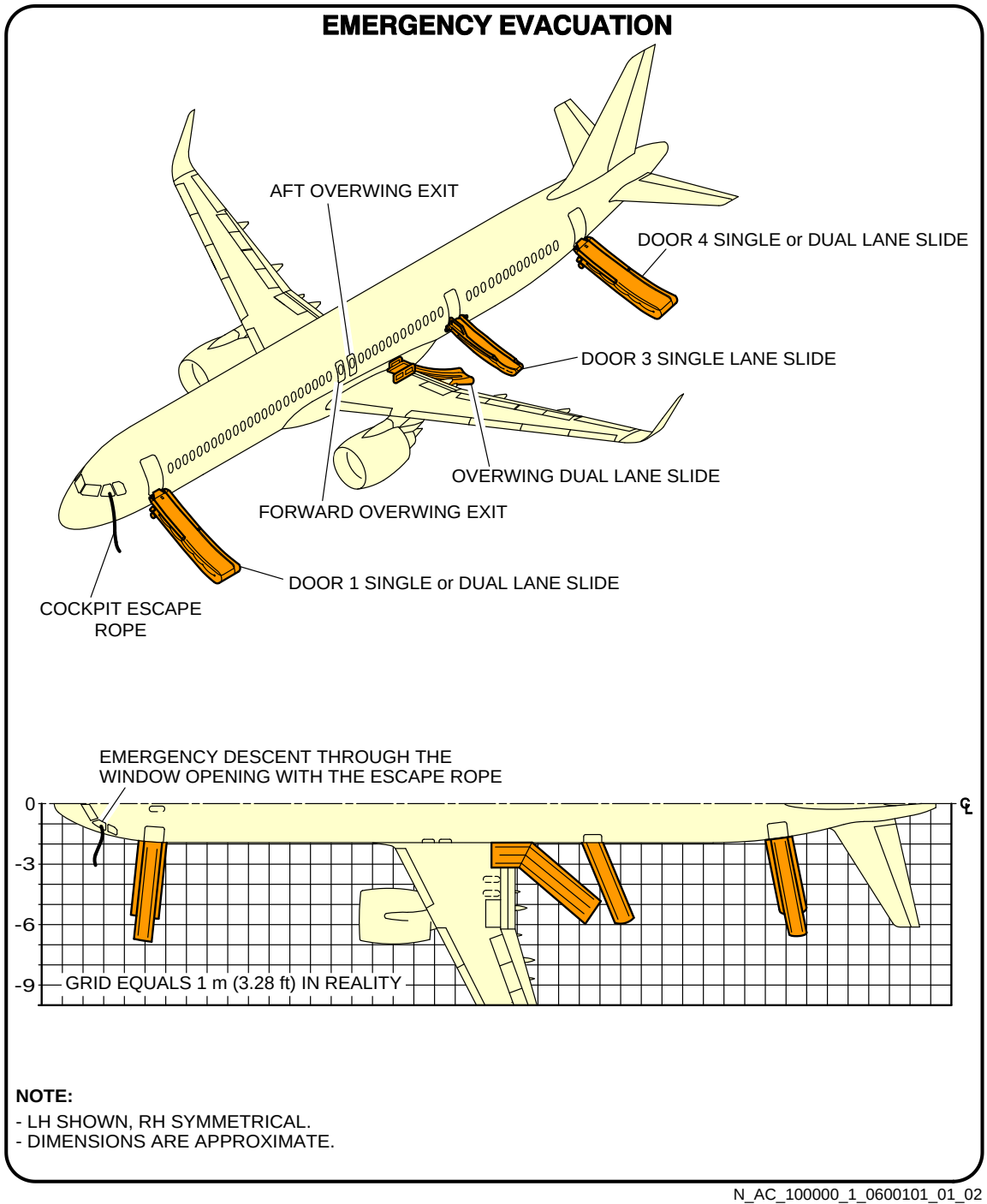

N_AC_100000_1_0600101_01_02

Emergency Evacuation Devices
FIGURE-10-0-0-991-060-A01

**ON A/C A321-100 A321-200 A321neo A321neo-XLR

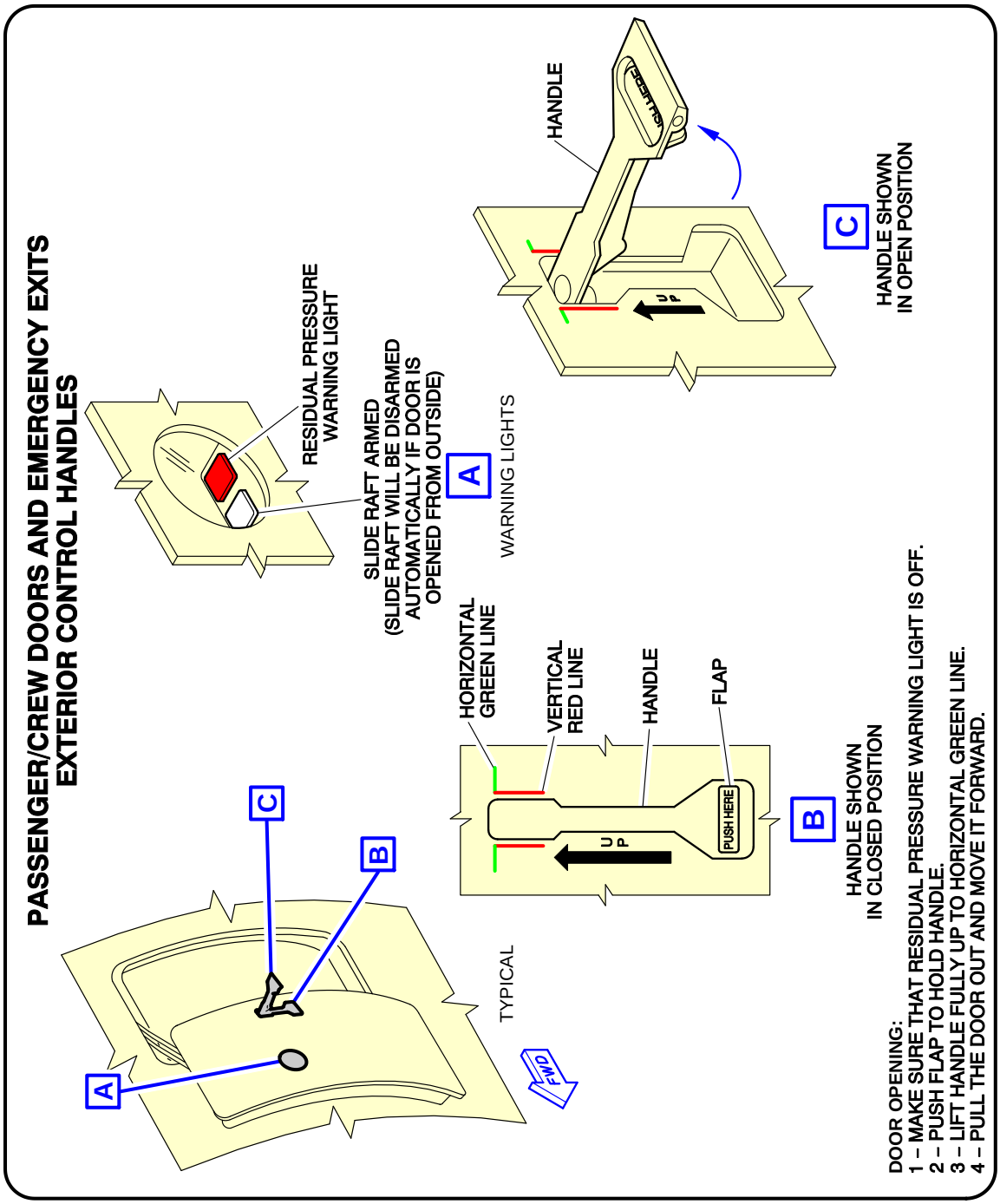

N_AC_100000_1_0490101_01_01

Pax/Crew Doors and Emergency Exits
FIGURE-10-0-0-991-049-A01

**ON A/C A321neo-XLR

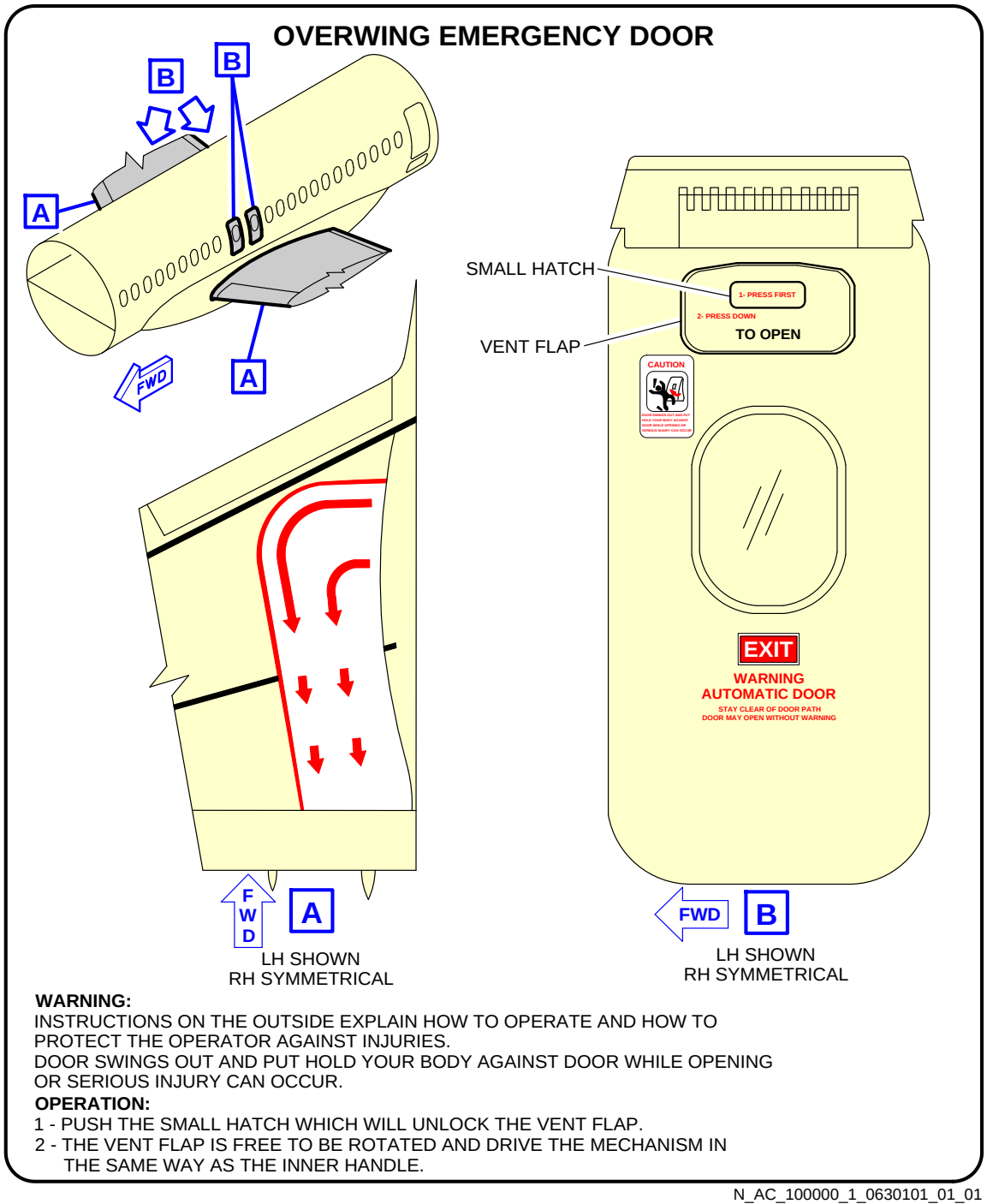

N_AC_100000_1_0630101_01_01

Overwing Emergency Doors
FIGURE-10-0-0-991-063-A01

**ON A/C A321-100 A321-200 A321neo A321neo-XLR

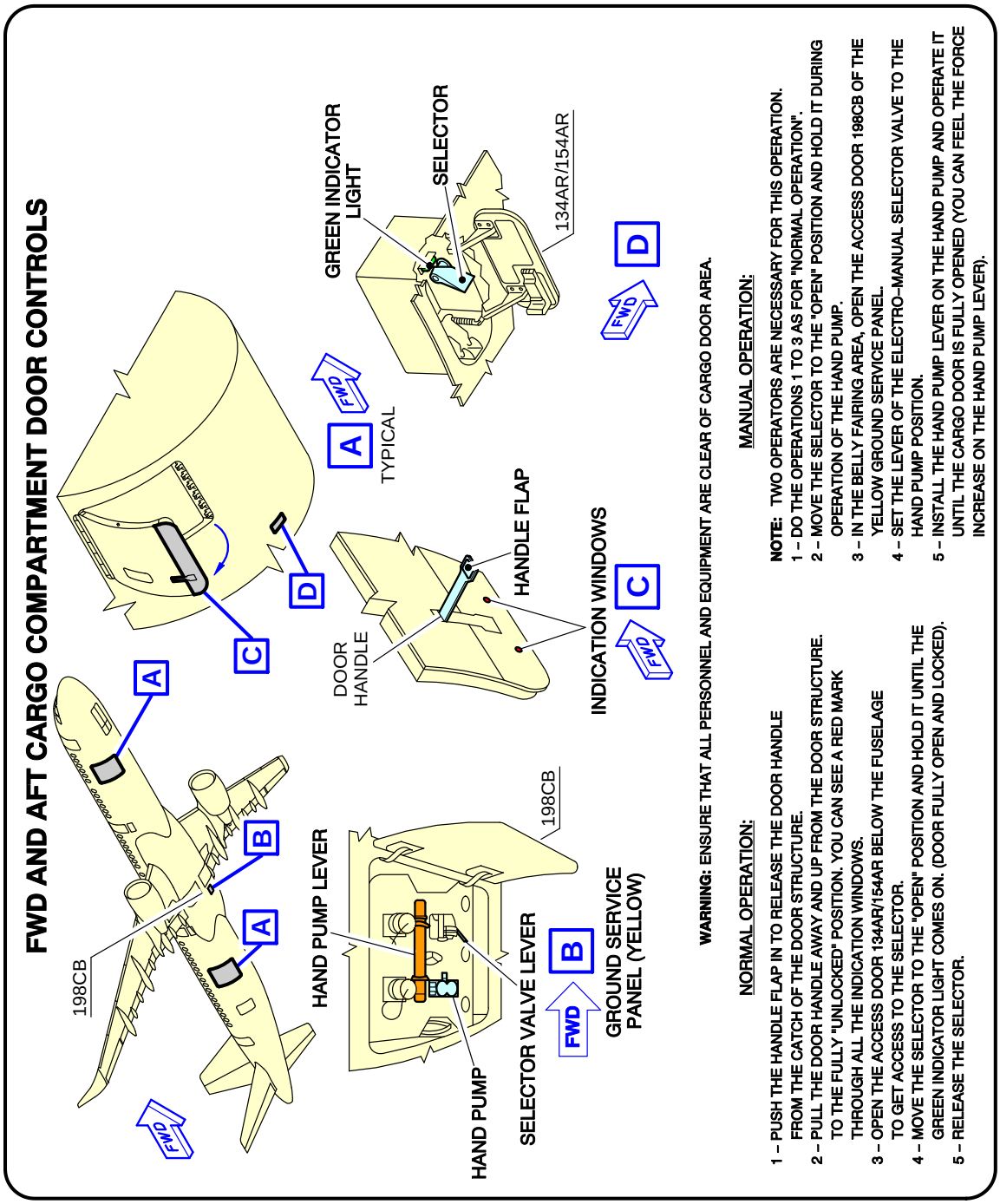

N_AC_100000_1_0500101_01_01

FWD and AFT Lower Deck Cargo Doors
FIGURE-10-0-0-991-050-A01

**ON A/C A321-100 A321-200 A321neo A321neo-XLR

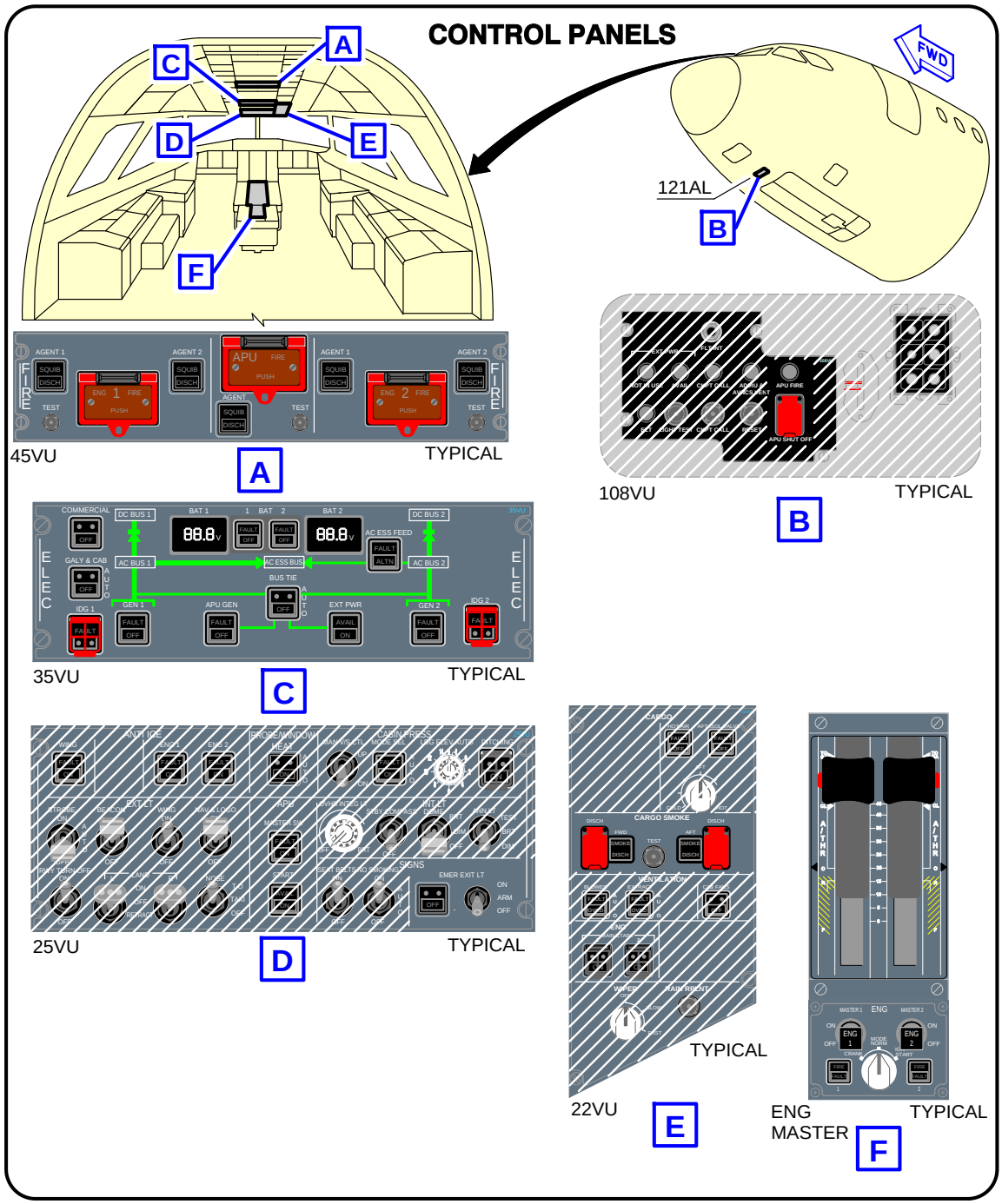

N_AC_100000_1_0510101_01_02

Control Panels
FIGURE-10-0-0-991-051-A01

**ON A/C A321-100 A321-200 A321neo A321neo-XLR

APU ACCESS DOOR

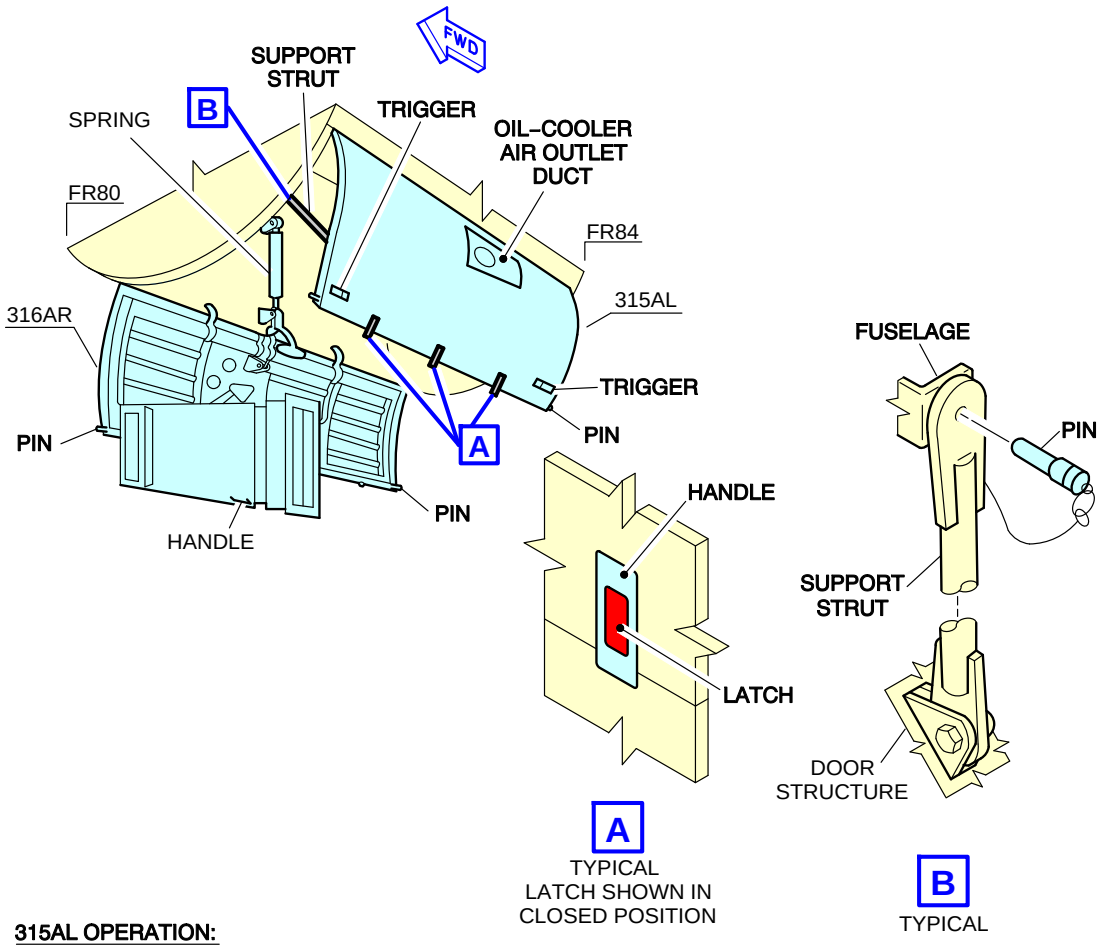

315AL OPERATION:

1 – OPERATE THE TRIGGERS.
2 – RELEASE THE LATCHES AND PULL THE HANDLES.
3 – REMOVE THE SUPPORT STRUT PIN.
4 – PUT THE SUPPORT STRUT AGAINST FUSELAGE AND LOCK THE DOOR IN THE OPEN POSITION WITH THE SUPPORT STRUT PIN.

316AR OPERATION:

1 – OPERATE THE TRIGGERS.
2 - PULL THE HANDLE TO MOVE THE ACCESS DOOR DOWN TO ITS VERTICAL POSITION.
3 - PUSH THE HANDLE OUTBOARD TO MOVE THE ACCESS DOOR TO ITS OVERCENTER POSITION.
4 - THE SPRING OF THE DOOR MECHANISM HOLDS THE DOOR IN THE FULLY OPEN POSITION.

N_AC_100000_1_0520101_01_02

APU Access Door
FIGURE-10-0-0-991-052-A01

****ON A/C A321-100 A321-200 A321neo**

GROUND CLEARANCES

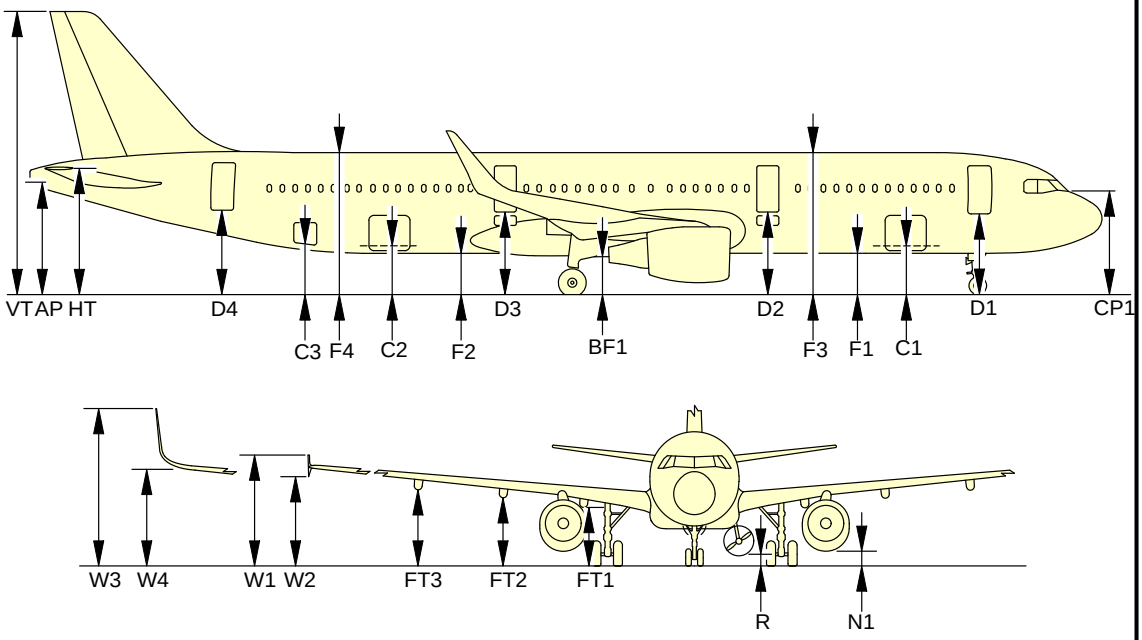

DIMENSIONS ARE RELATED TO AIRCRAFT WEIGHT AND CG CONFIGURATION

A/C CONFIGURATION		47 000 kg (103 617 lb) CG (25%)	
		m	ft
DOORS	D1	3.50	11.48
	D2	3.57	11.71
	D3	4.01	13.16
	D4	3.73	12.24
	C1	2.10	6.89
	C2	2.26	7.41
	C3	2.33	7.64

A/C CONFIGURATION		47 000 kg (103 617 lb) CG (25%)	
		m	ft
FUSELAGE	F1	1.84	6.04
	F2	1.99	6.53
	F3	5.98	19.62
	F4	6.13	20.11
	BF1	1.76	5.77
	CP1	1.30	14.11
ENGINE/ NACELLE	N1 (CFM56)	0.71	2.33
	N1 (IAE V2500)	0.89	2.92
	N1 (CFM LEAP-1A)	0.58	1.90
	N1 (PW 1100G)	0.58	1.90

A/C CONFIGURATION		47 000 kg (103 617 lb) CG (25%)	
		m	ft
WINGS	FT1	2.75	9.02
	FT2	3.18	10.43
	FT3	3.52	11.55
	W1	4.88	16.01
	W2	3.91	12.83
	W3	6.82	22.38
	W4	4.18	13.71
	R	0.64	2.10
TAILPLANE	HT	5.58	18.31
	AP	4.86	15.94
	VT	12.10	39.70

NOTE:
PASSENGER AND CARGO DOOR GROUND CLEARANCES ARE MEASURED FROM THE CENTER OF THE DOOR SILL AND FROM FLOOR LEVEL.

N_AC_100000_1_0530101_01_04

Aircraft Ground Clearances
FIGURE-10-0-0-991-053-A01

****ON A/C A321neo-XLR**

GROUND CLEARANCES

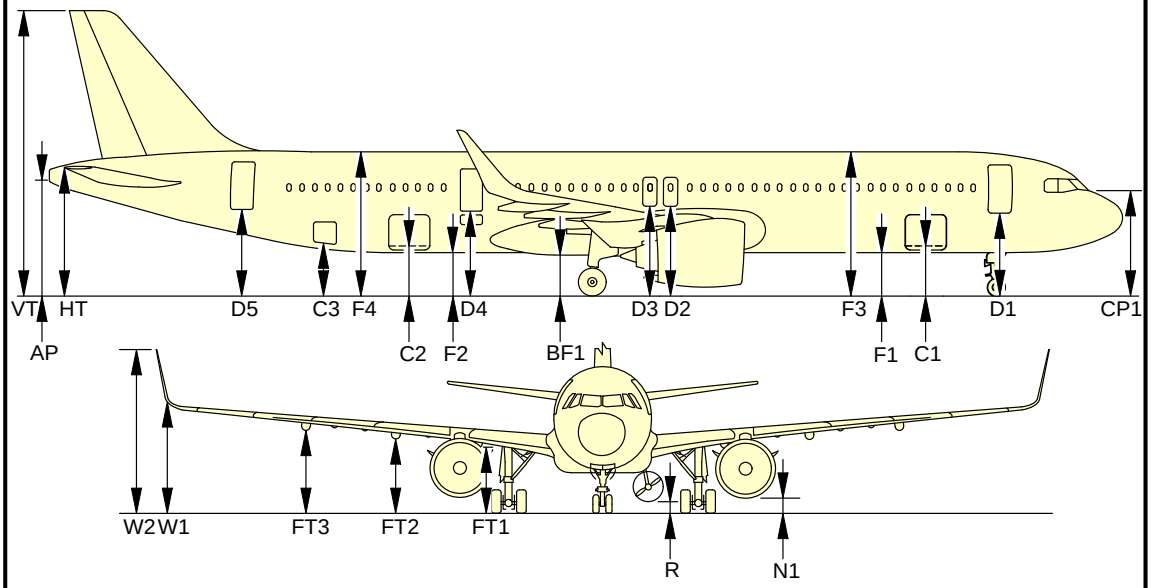

DIMENSIONS ARE RELATED TO AIRCRAFT WEIGHT AND CG CONFIGURATION

A/C CONFIGURATION		47 000 kg (103 617 lb) CG (25%)	
		m	ft
DOORS	D1	3.487	11.480
	D2	3.949	11.710
	D3	3.953	13.160
	D4	4.033	12.240
	D4	3.624	11.890
	C1	2.100	6.890
	C2	2.260	7.410
	C3	2.330	7.640

A/C CONFIGURATION		47 000 kg (103 617 lb) CG (25%)	
		m	ft
FUSELAGE	F1	1.809	5.935
	F2	1.898	6.227
	F3	5.952	19.527
	F4	6.041	19.819
	BF1	1.687	5.535
	CP1	4.298	14.101
ENGINE/ NACELLE	N1 (PW)	0.741	2.431
	N1 (PW 1100)	0.532	1.745
	N1 (CFM)	0.706	2.316
	N1 (CFM LEAP)	0.532	1.745

A/C CONFIGURATION		47 000 kg (103 617 lb) CG (25%)	
		m	ft
WINGS	FT1	3.680	8.793
	FT2	3.112	10.210
	FT3	3.445	11.302
	W1	6.777	22.234
	W2	4.137	13.574
	R	0.600	1.969
TAILPLANE	HT	5.450	17.880
	AP	4.730	15.518
	VT	11.968	39.265

NOTE:
PASSENGER AND CARGO DOOR GROUND CLEARANCES ARE MEASURED FROM THE CENTER OF THE DOOR SILL AND FROM FLOOR LEVEL.

N_AC_100000_1_0690101_01_01

Aircraft Ground Clearances
FIGURE-10-0-0-991-069-A01

**ON A/C A321-100 A321-200 A321neo A321neo-XLR

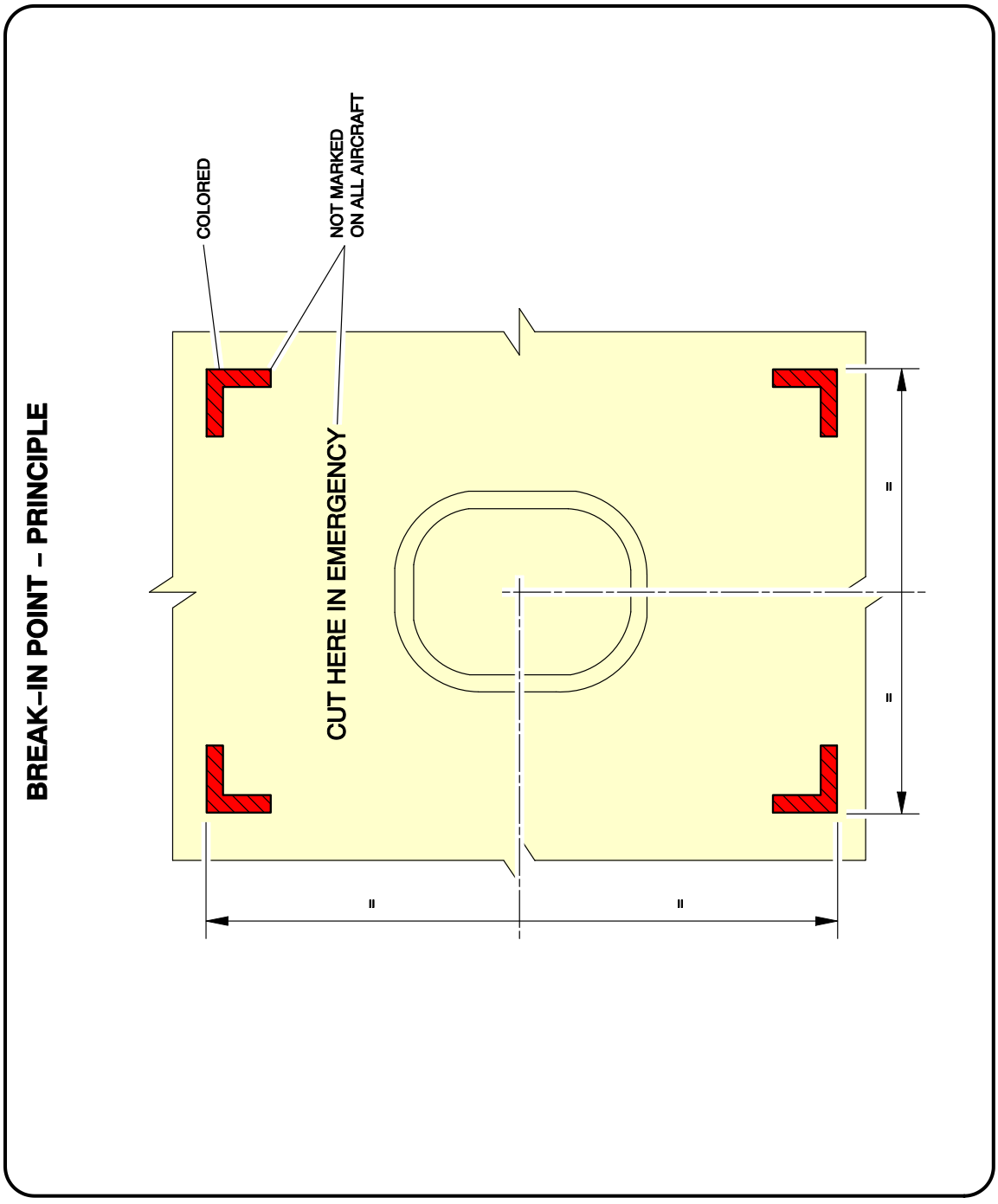

N_AC_100000_1_0540101_01_01

Structural Break-in Points
FIGURE-10-0-0-991-054-A01